3060-1

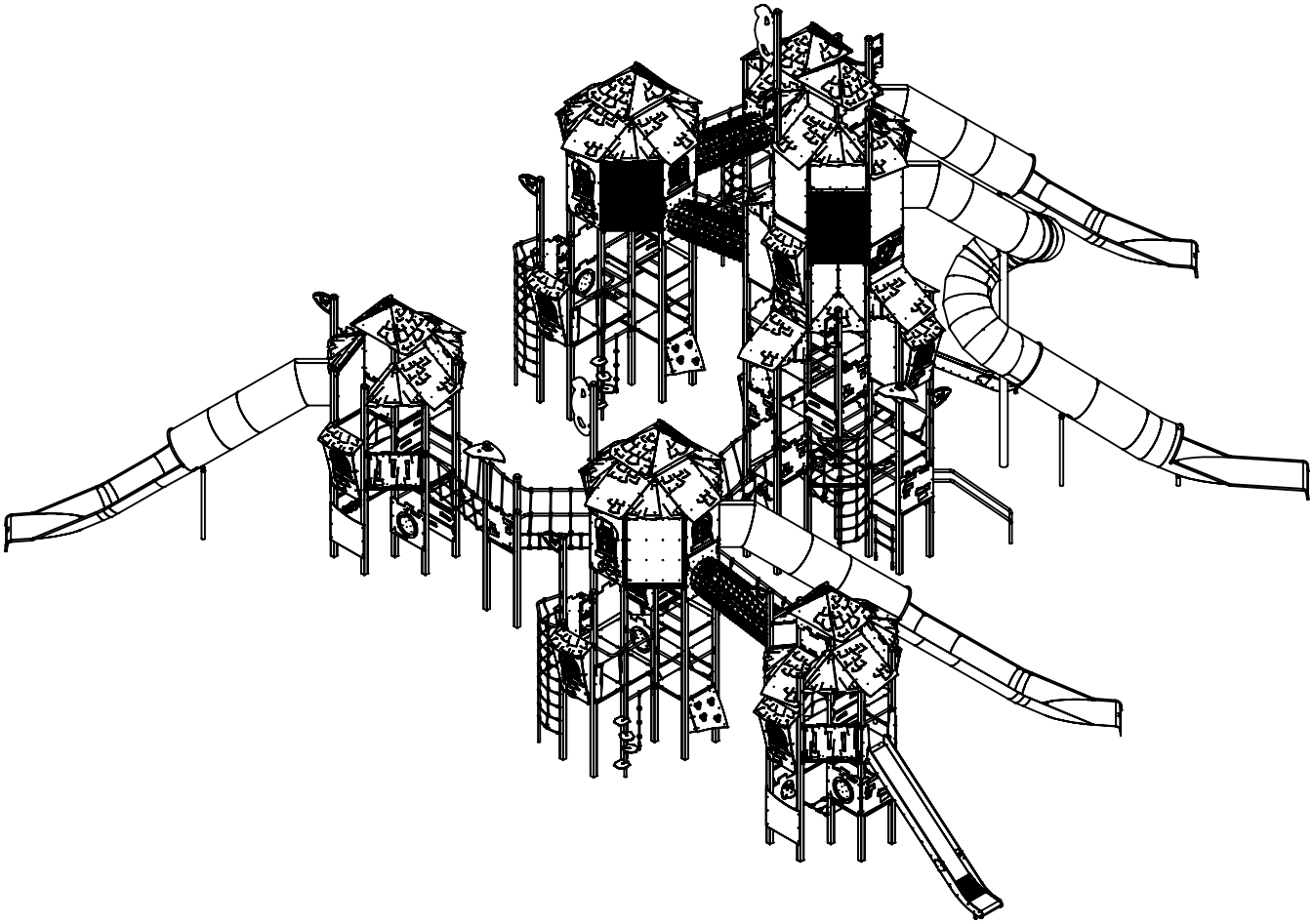

3060-1S2

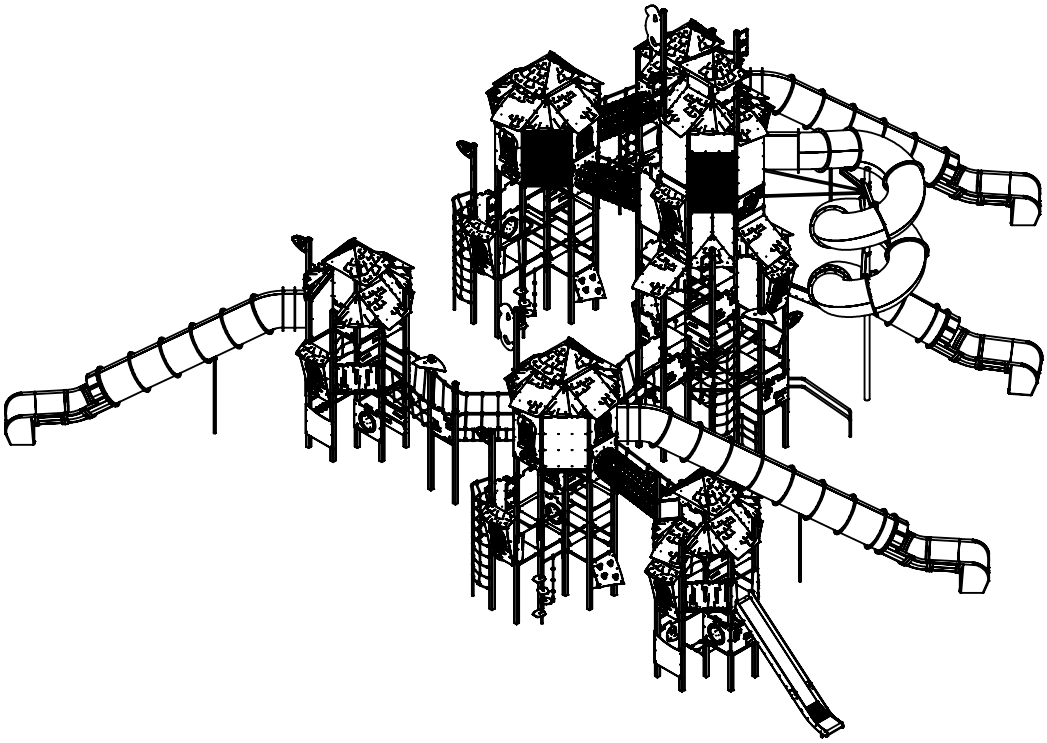

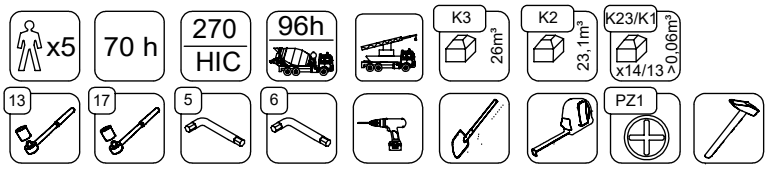

v011
28.05.2024
A. D.
[cm]

vinci play

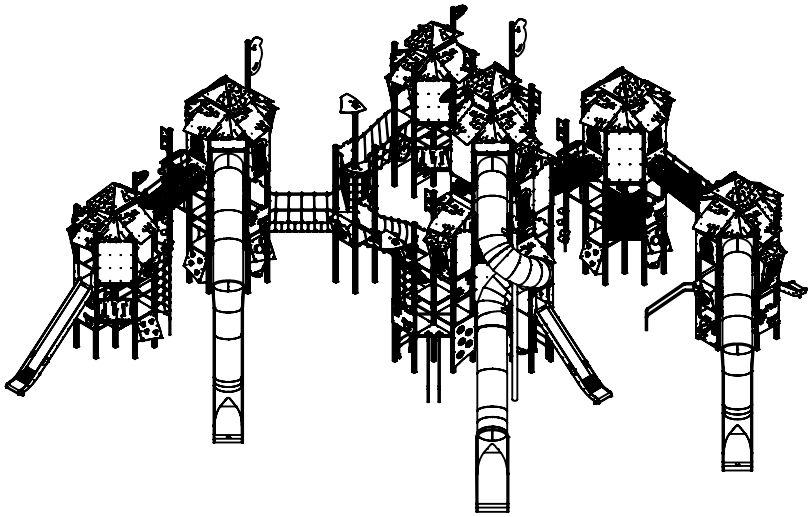

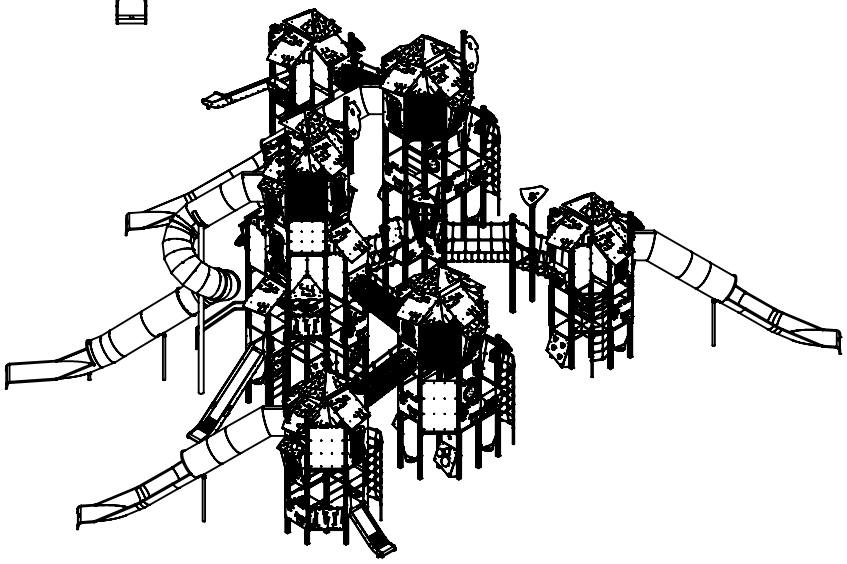

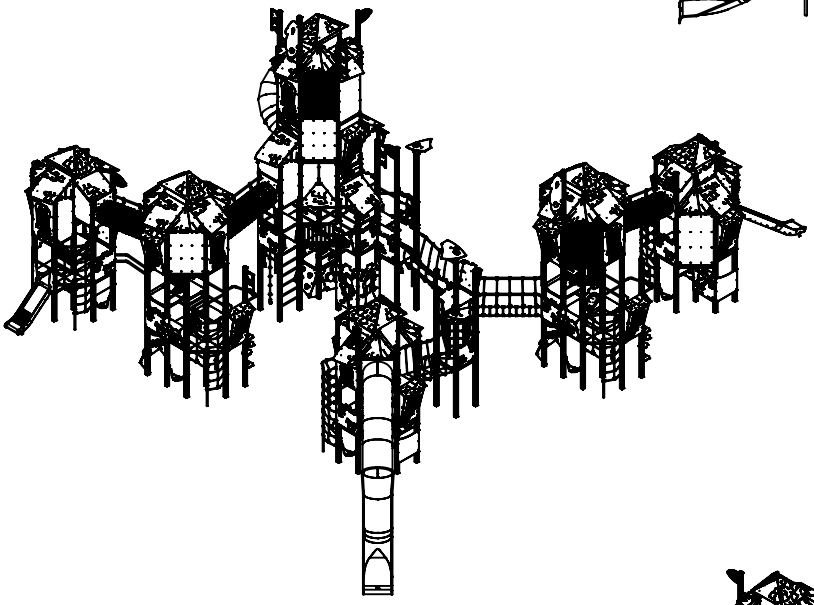

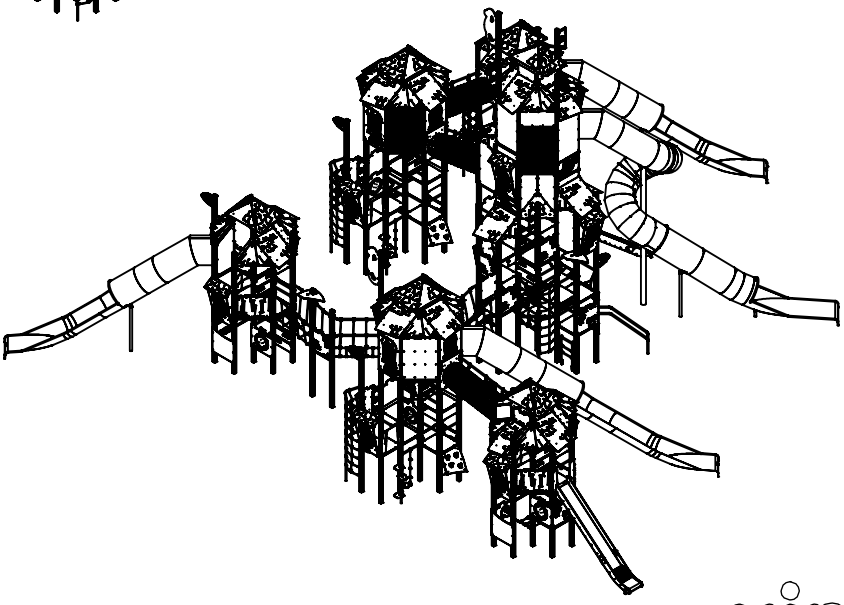

[cm]

3060-1S2

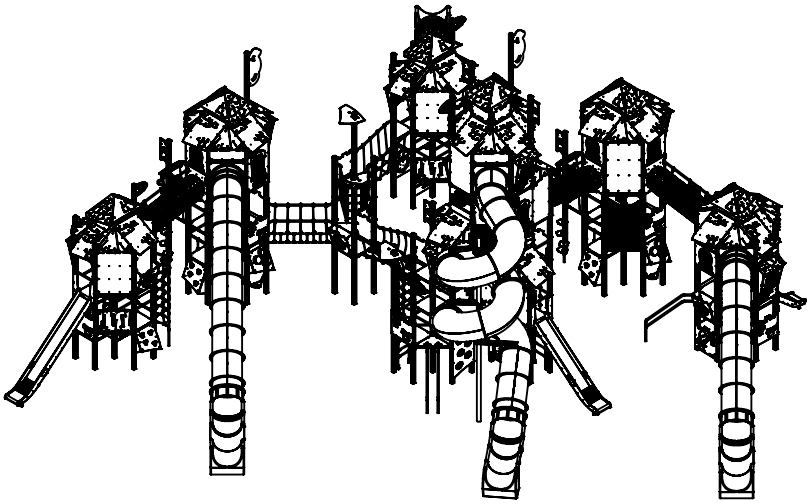

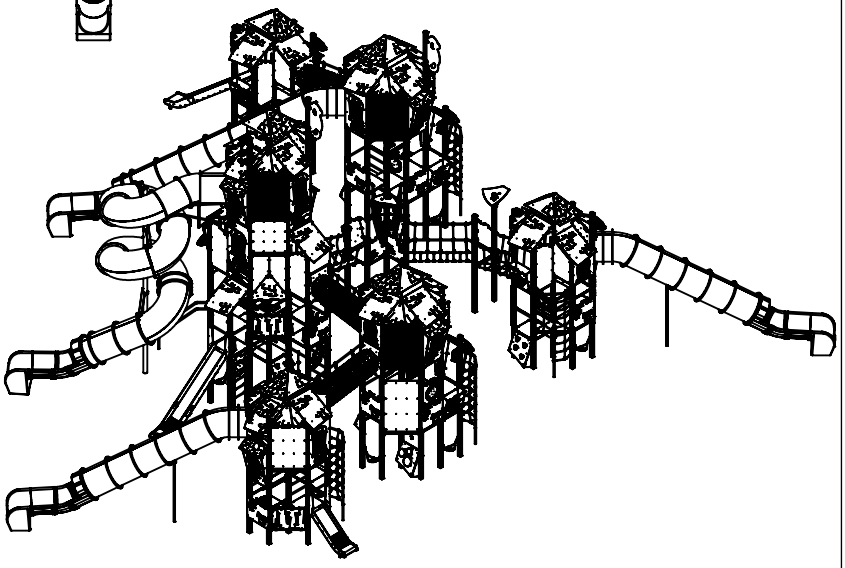

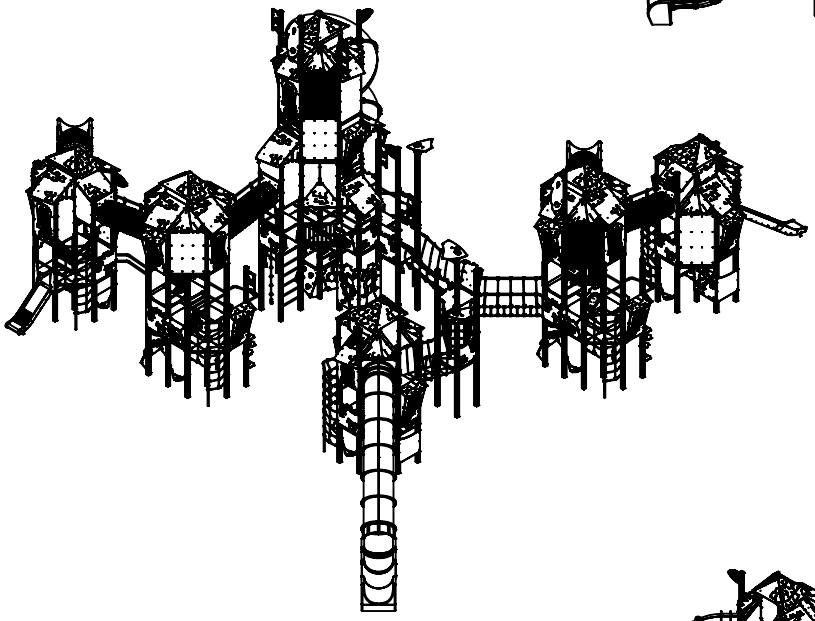

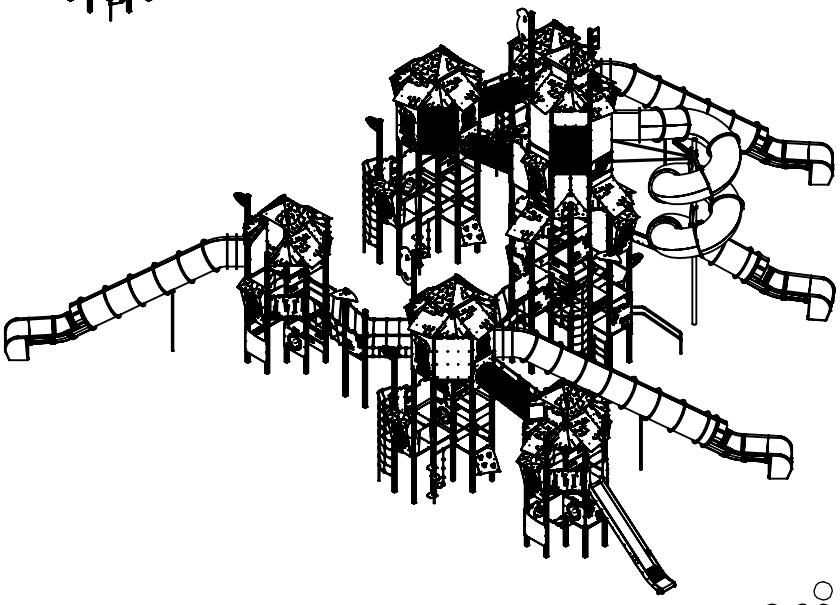

[cm]

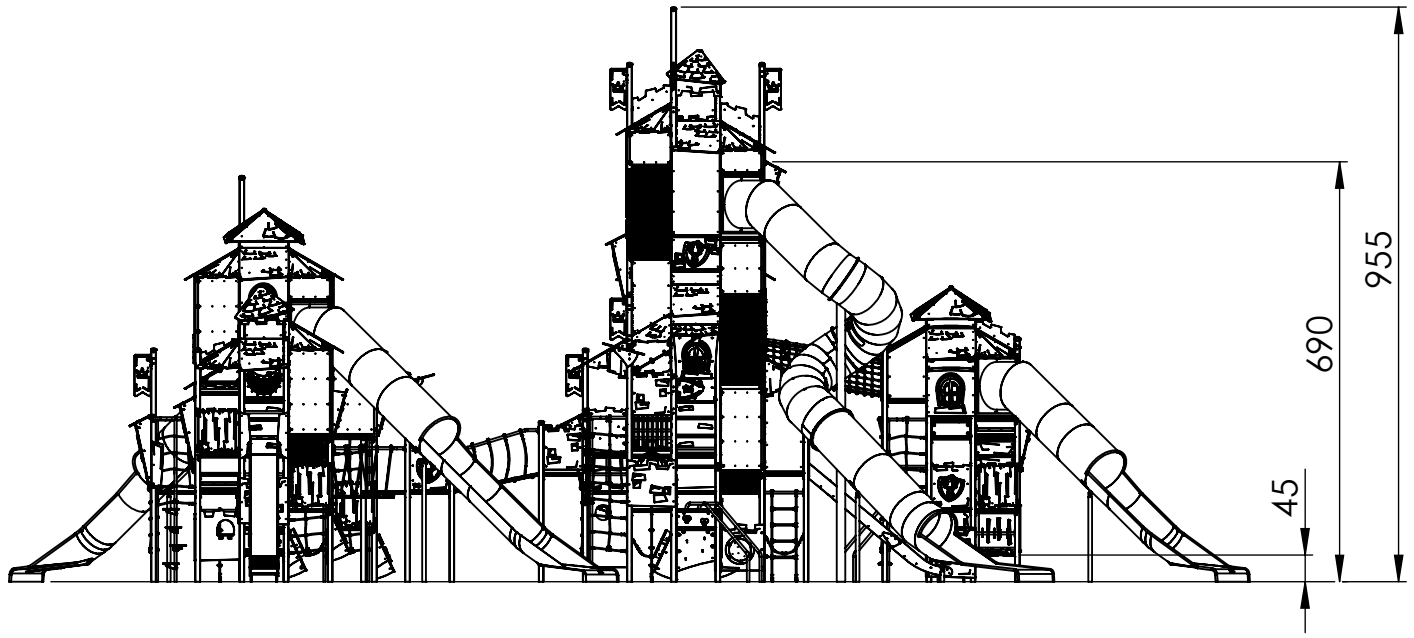

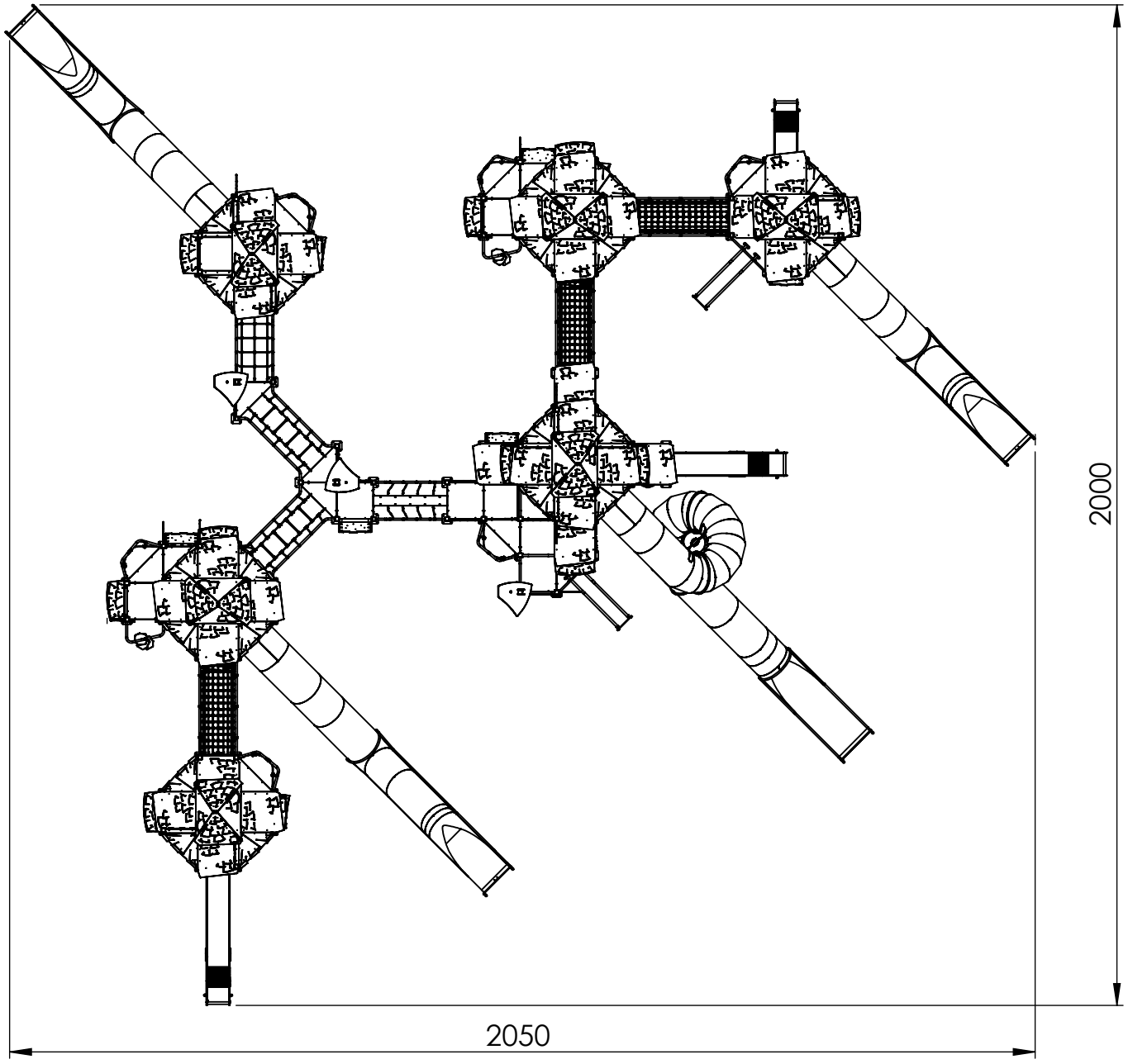

[cm]

3060-1S2

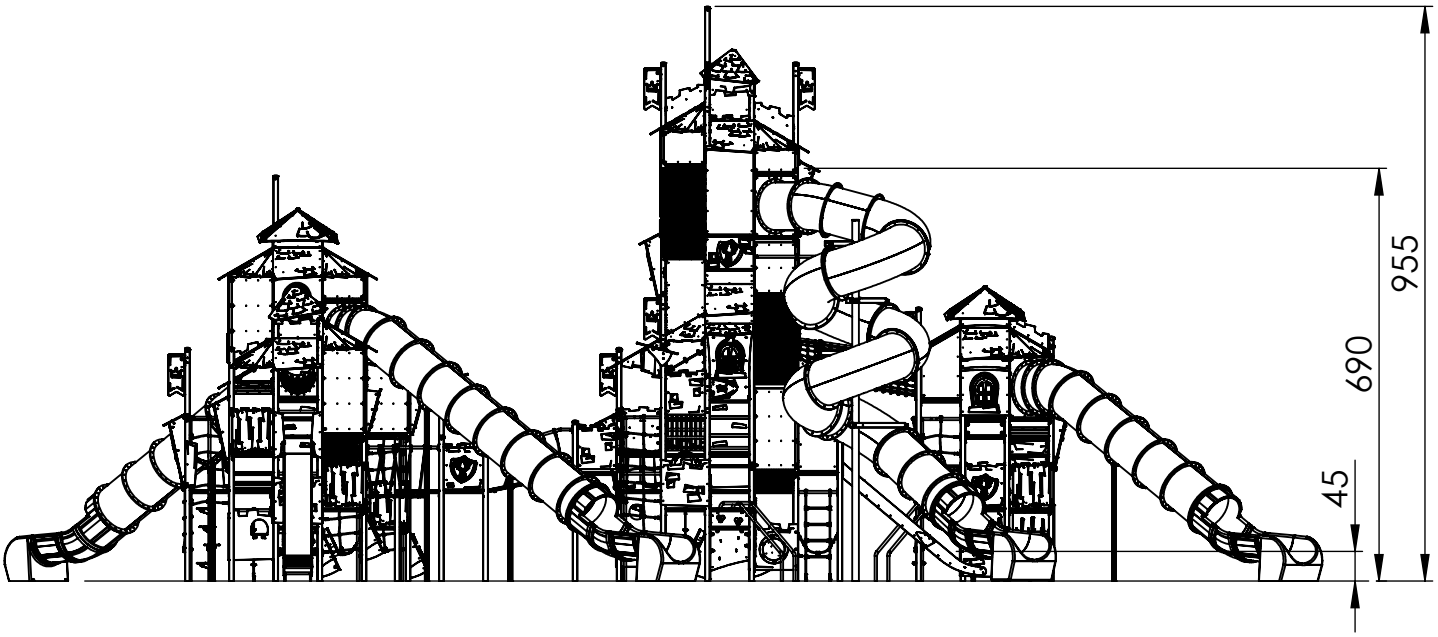

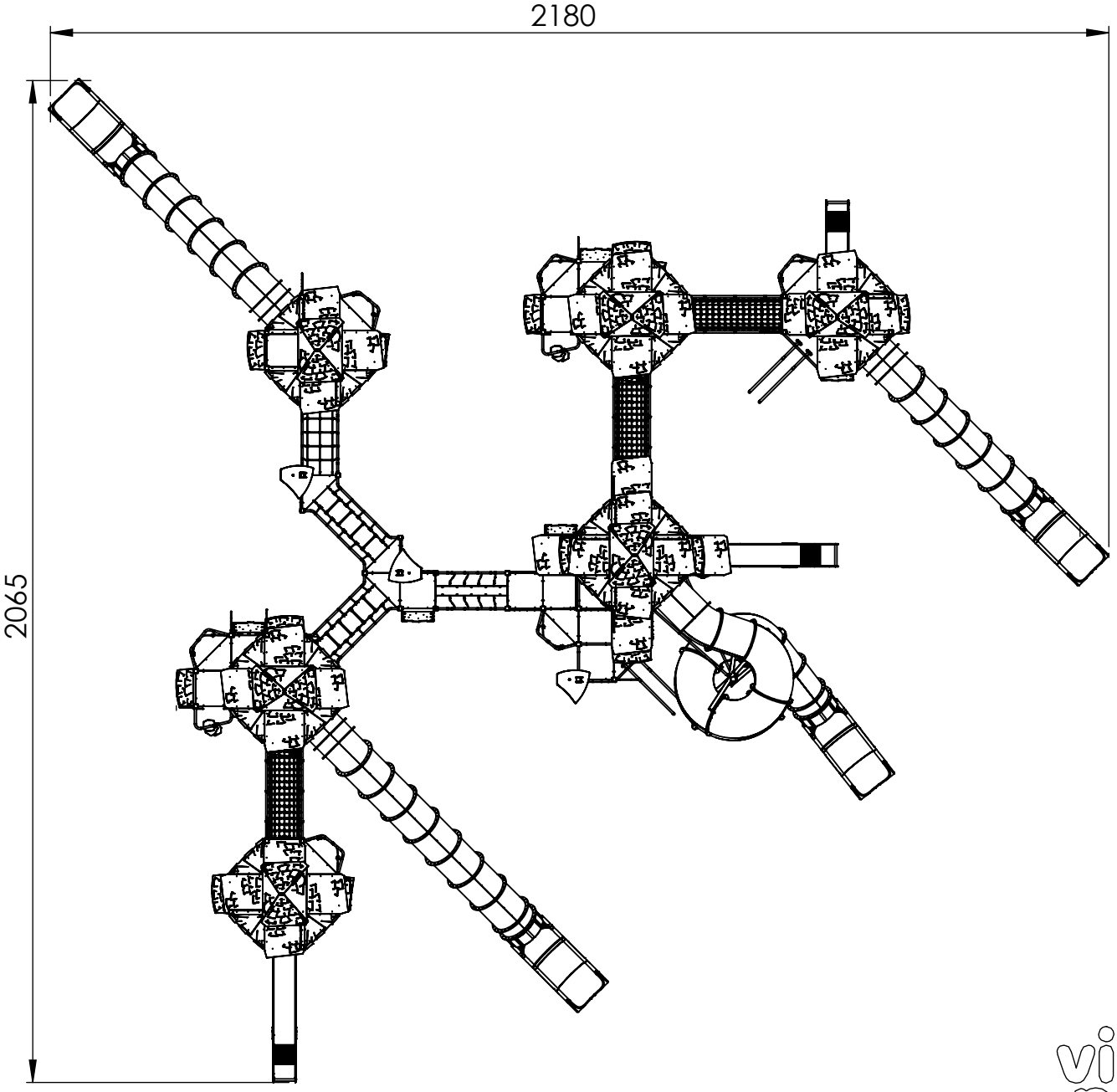

[cm]

vinci play

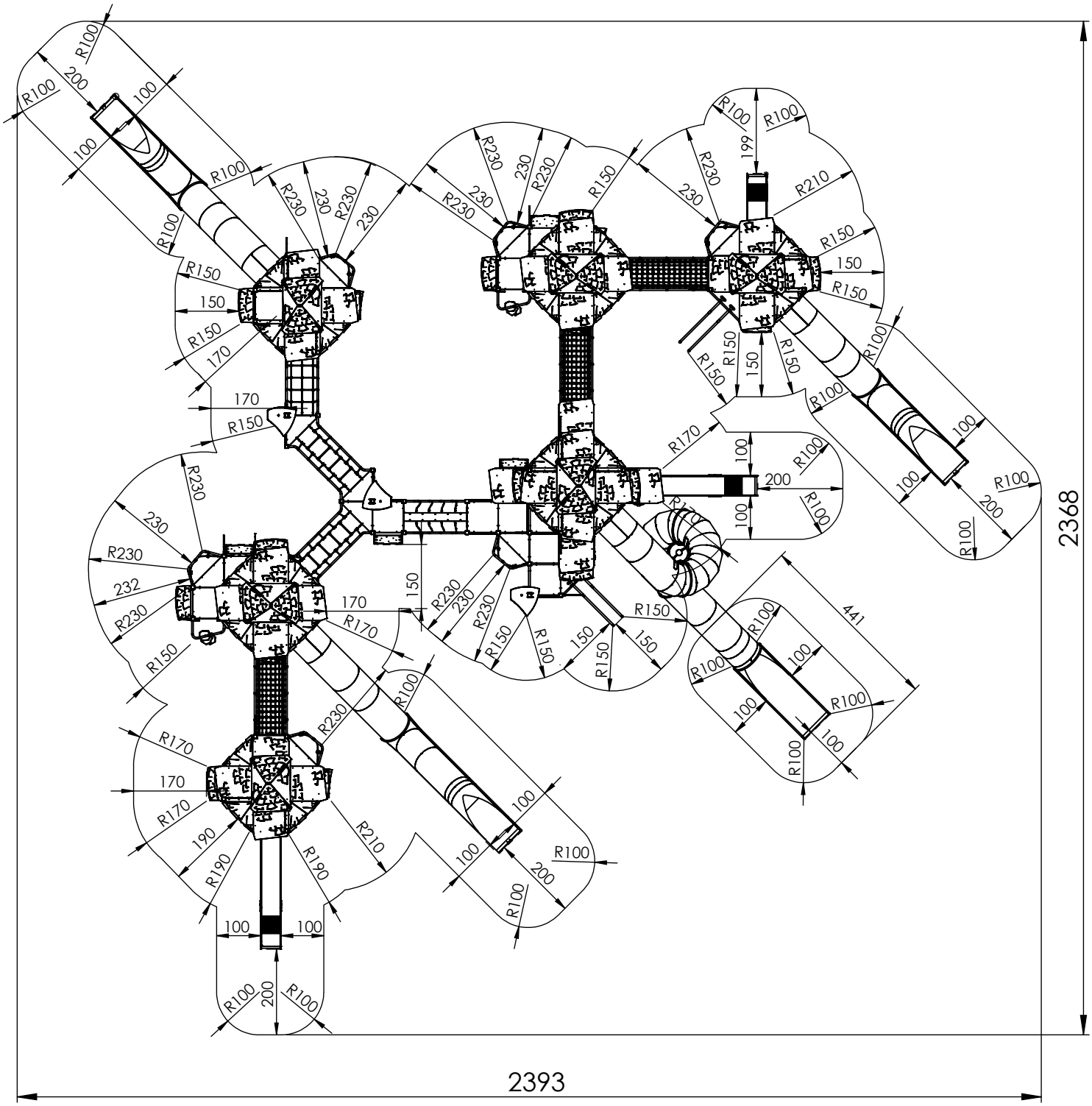

[cm]

vinci play

3060-1S2

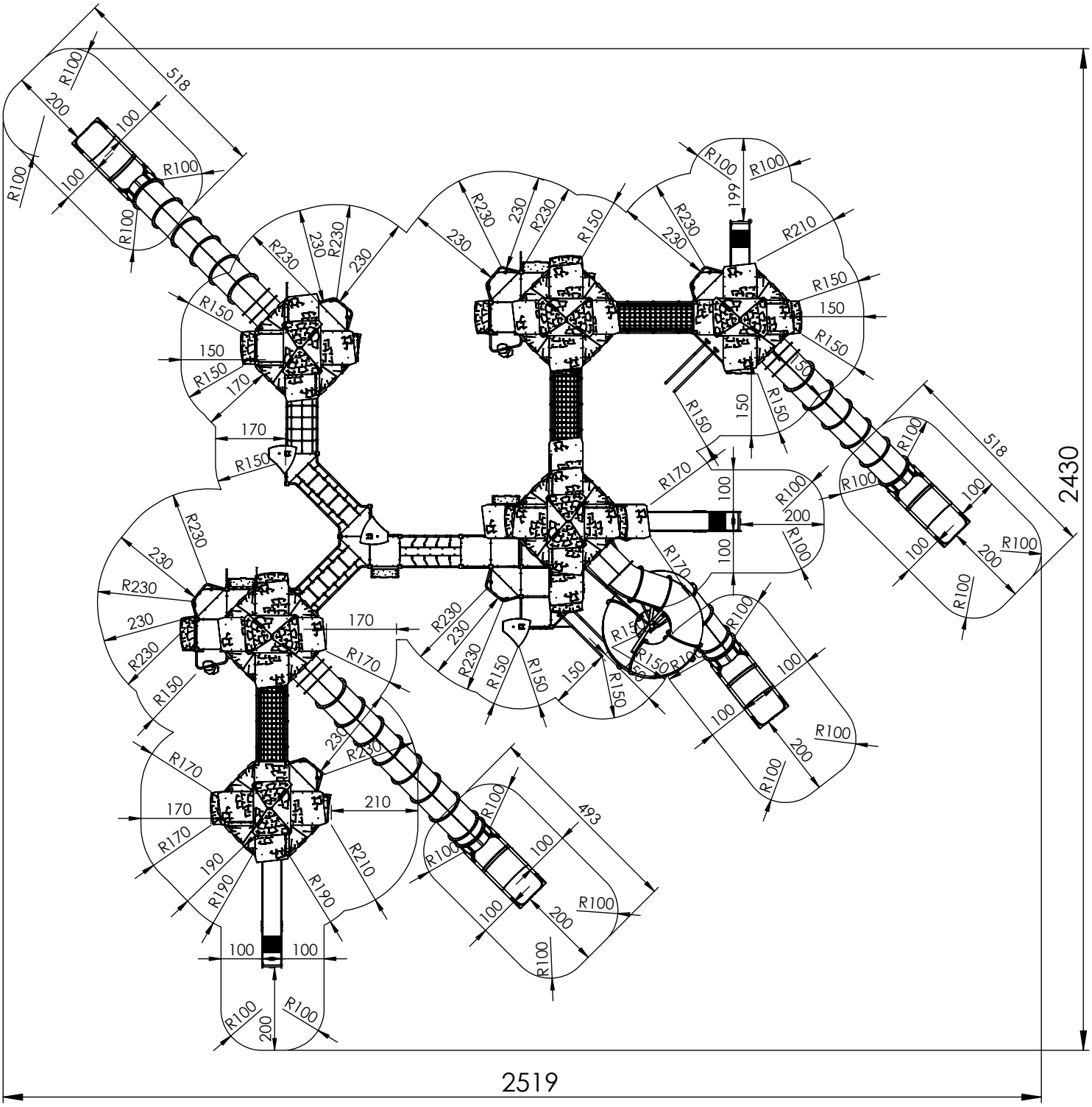

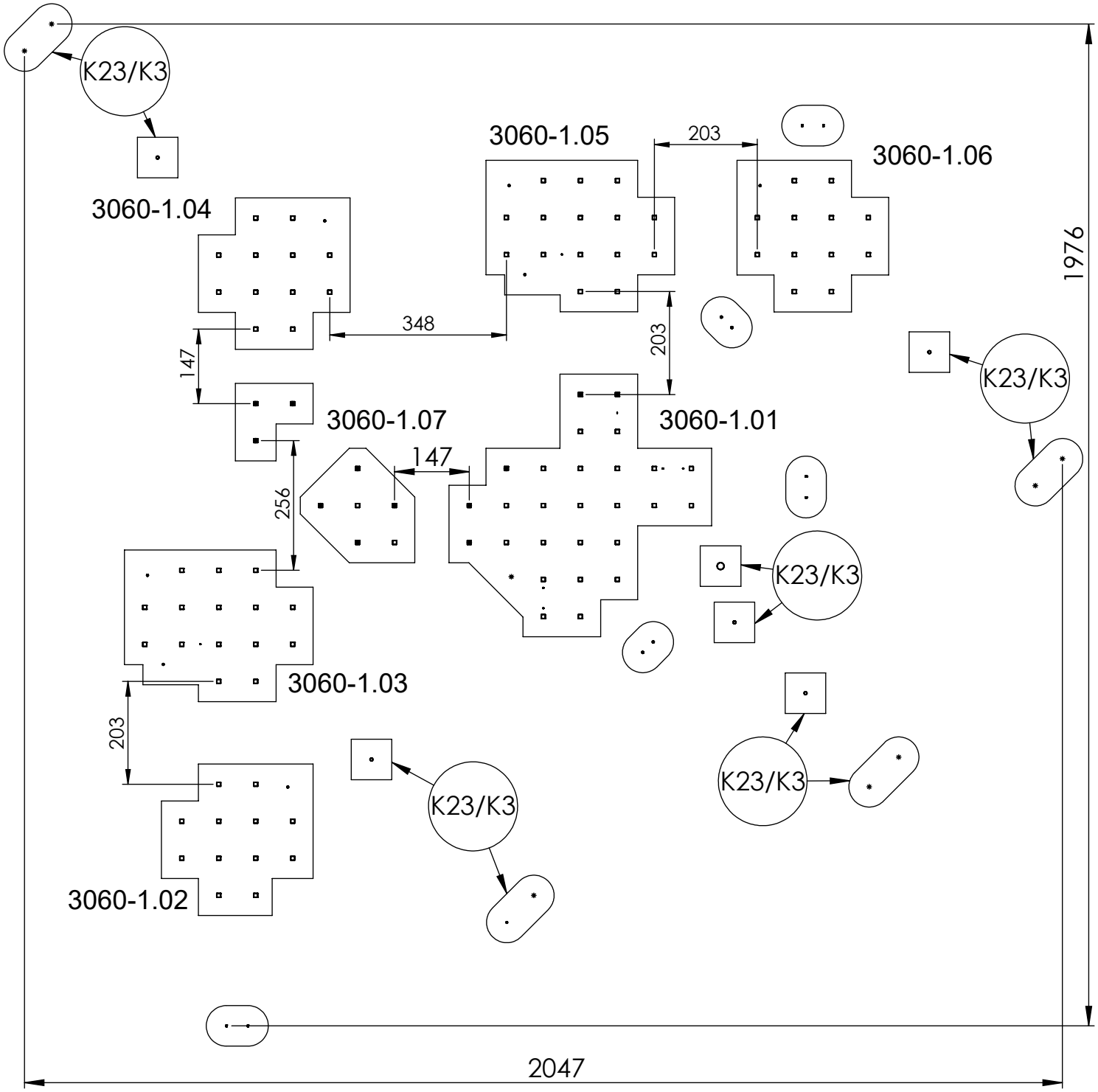
K23/K3
3060-1.05
203
3060-1.06
3060-1.04
1976
348
203
147
K23/K3
3060-1.07
3060-1.01
147
256
K23/K3
3060-1.03
203
K23/K3
K23/K3
3060-1.02
2047

[cm]

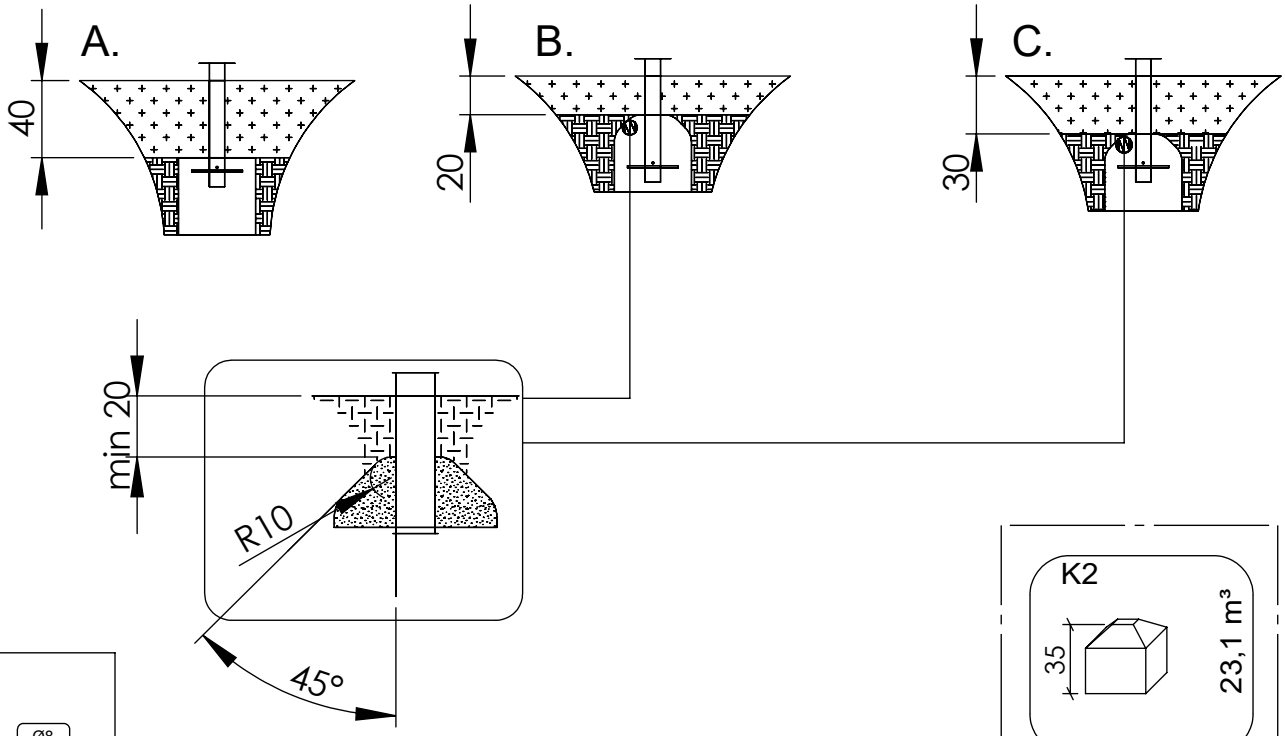

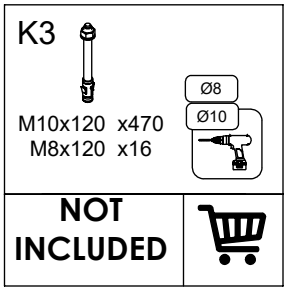

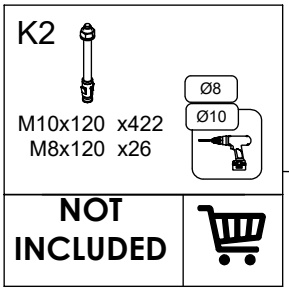

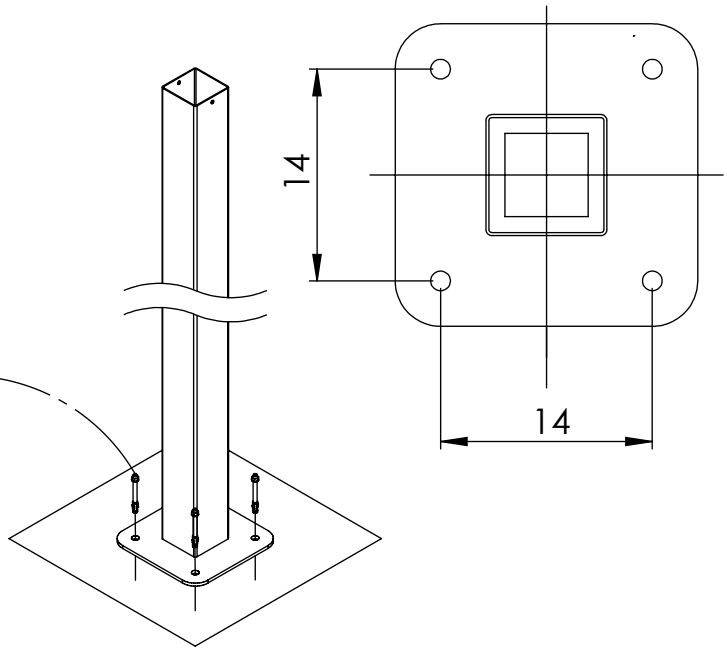

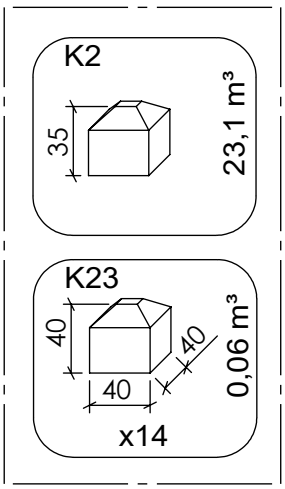

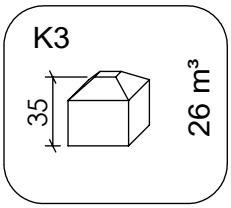

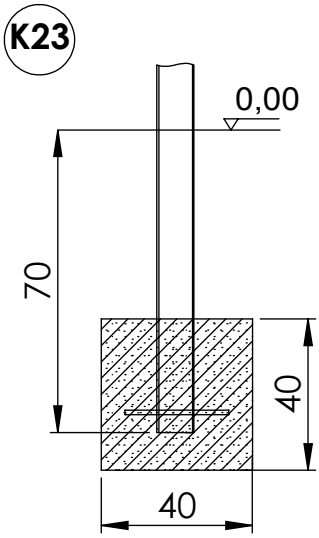

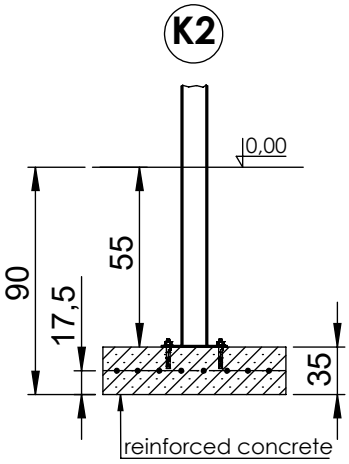

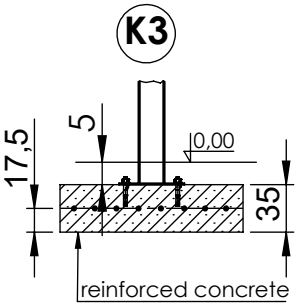

[cm]

vinci play

3060-1S2

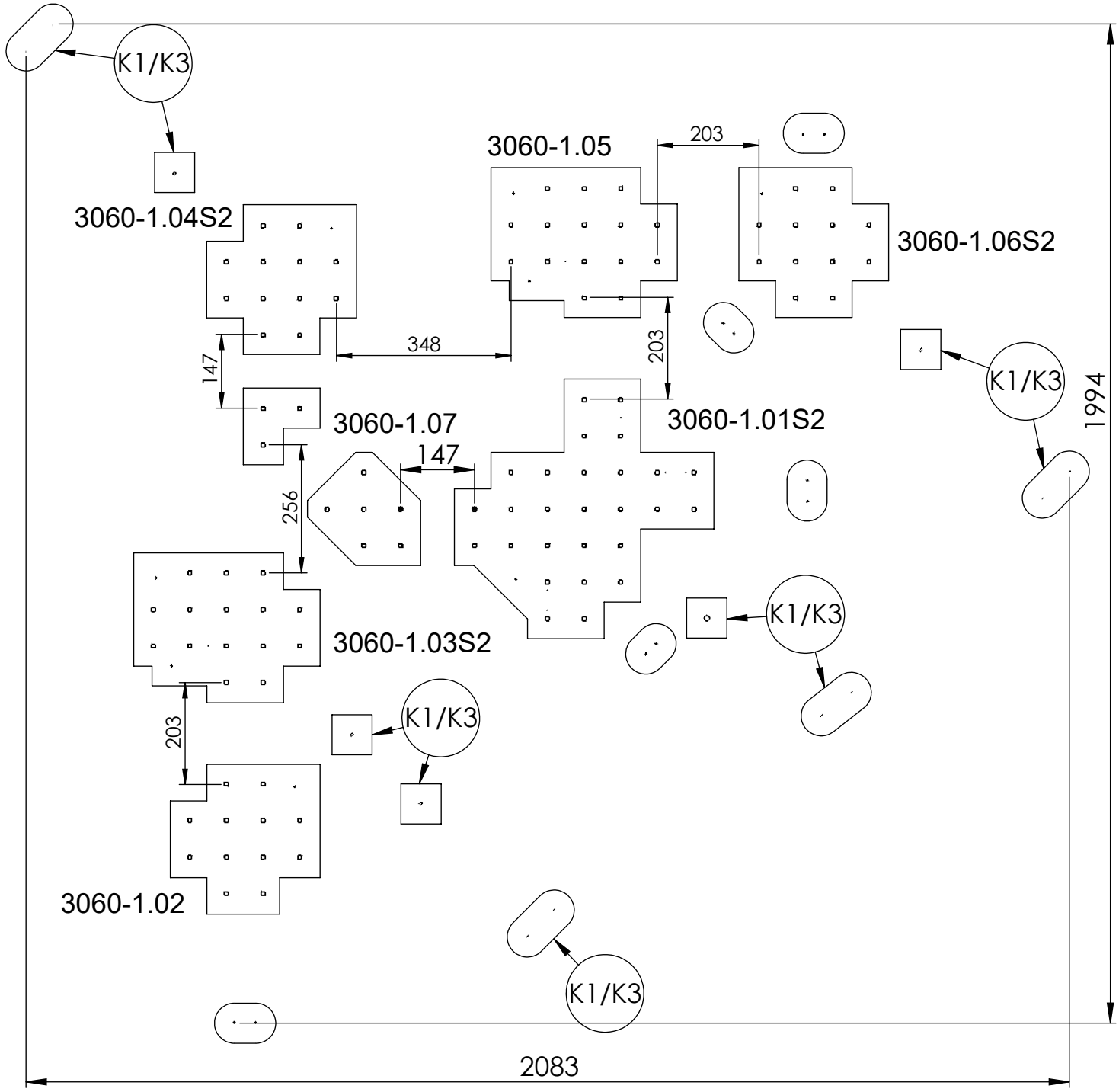
K1/K3
3060-1.05
203
3060-1.04S2
3060-1.06S2
348
203
147
K1/K3
1994
3060-1.07
3060-1.01S2
147
256
K1/K3
3060-1.03S2
203
K1/K3
3060-1.02
K1/K3
2083

[cm]

3060-1S2

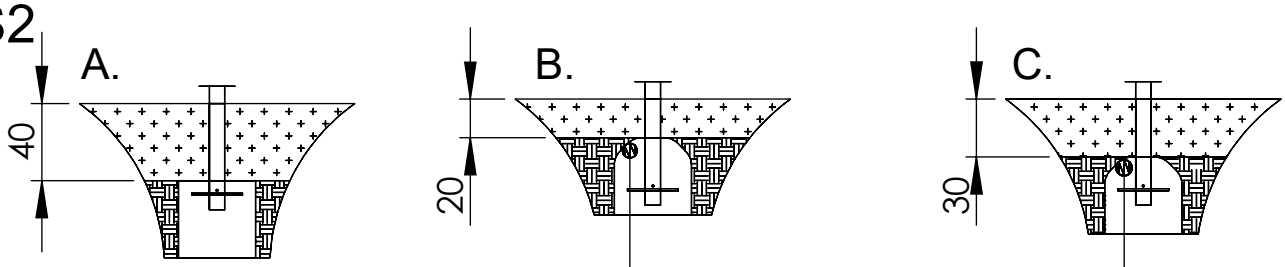

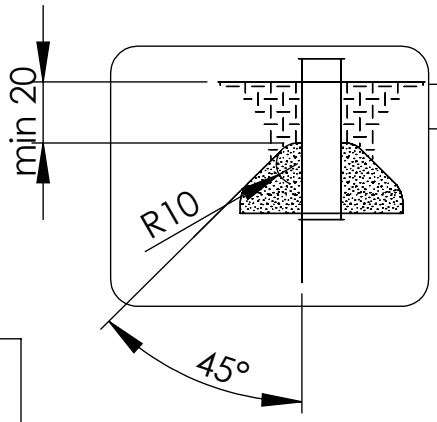

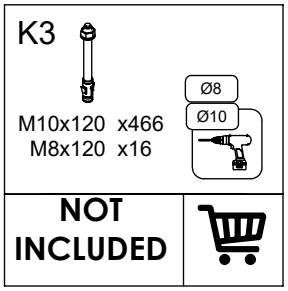

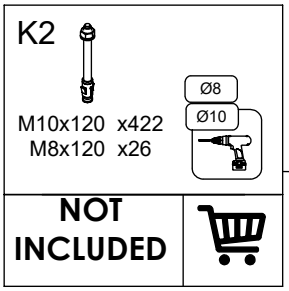

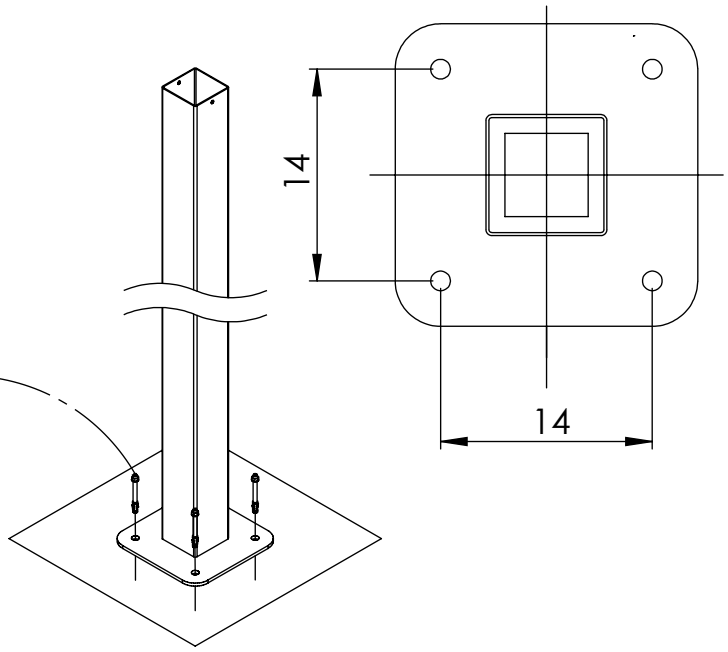

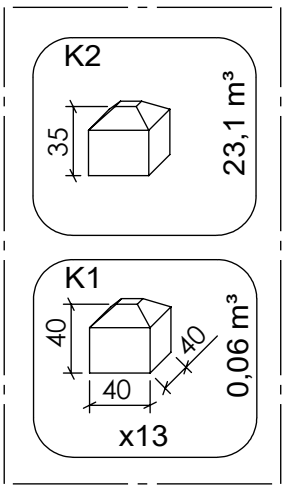

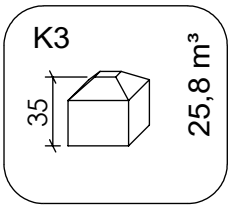

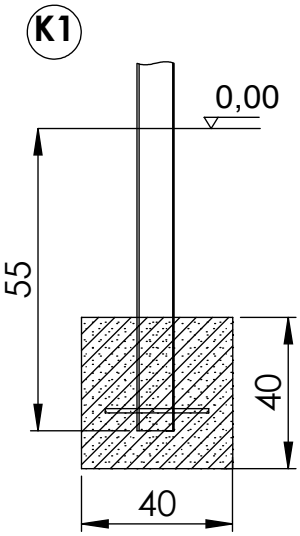

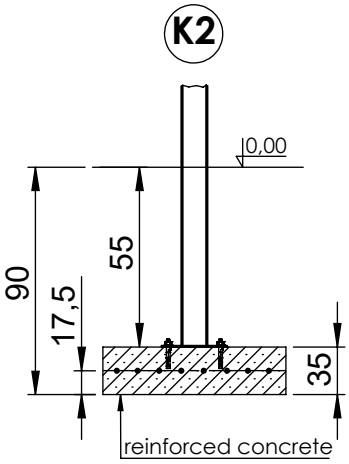

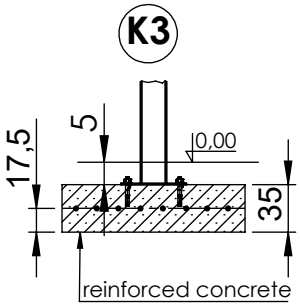

[cm]

vinci play

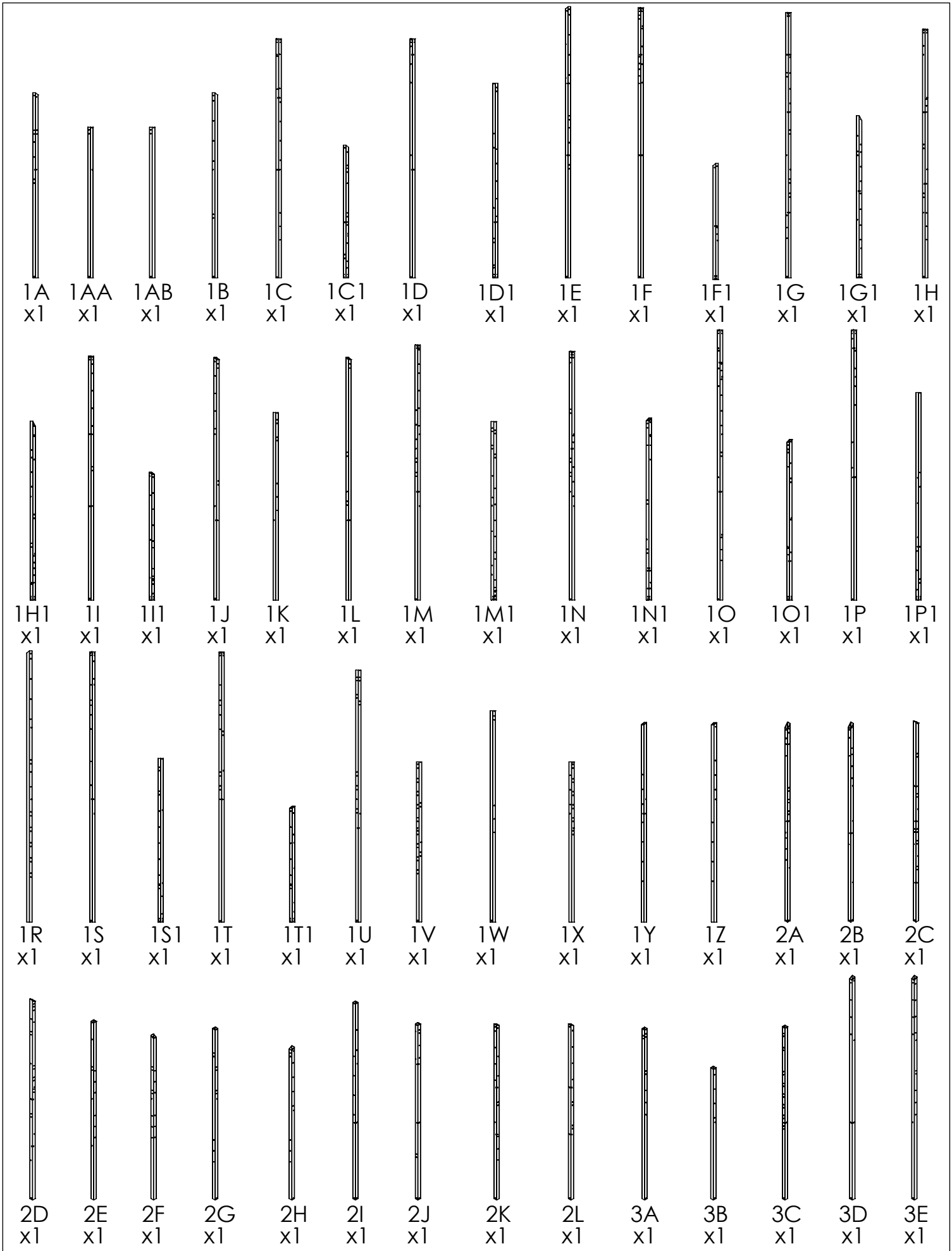
1A x1
1AA x1
1AB x1
1B x1
1C x1
1C1 x1
1D x1
1D1 x1
1E x1
1F x1
1F1 x1
1G x1
1G1 x1
1H x1
1H1 x1
1I x1
1I1 x1
1J x1
1K x1
1L x1
1M x1
1M1 x1
1N x1
1N1 x1
1O x1
1O1 x1
1P x1
1P1 x1
1R x1
1S x1
1S1 x1
1T x1
1T1 x1
1U x1
1V x1
1W x1
1X x1
1Y x1
1Z x1
2A x1
2B x1
2C x1
2D x1
2E x1
2F x1
2G x1
2H x1
2I x1
2J x1
2K x1
2L x1
3A x1
3B x1
3C x1
3D x1
3E x1
[cm]

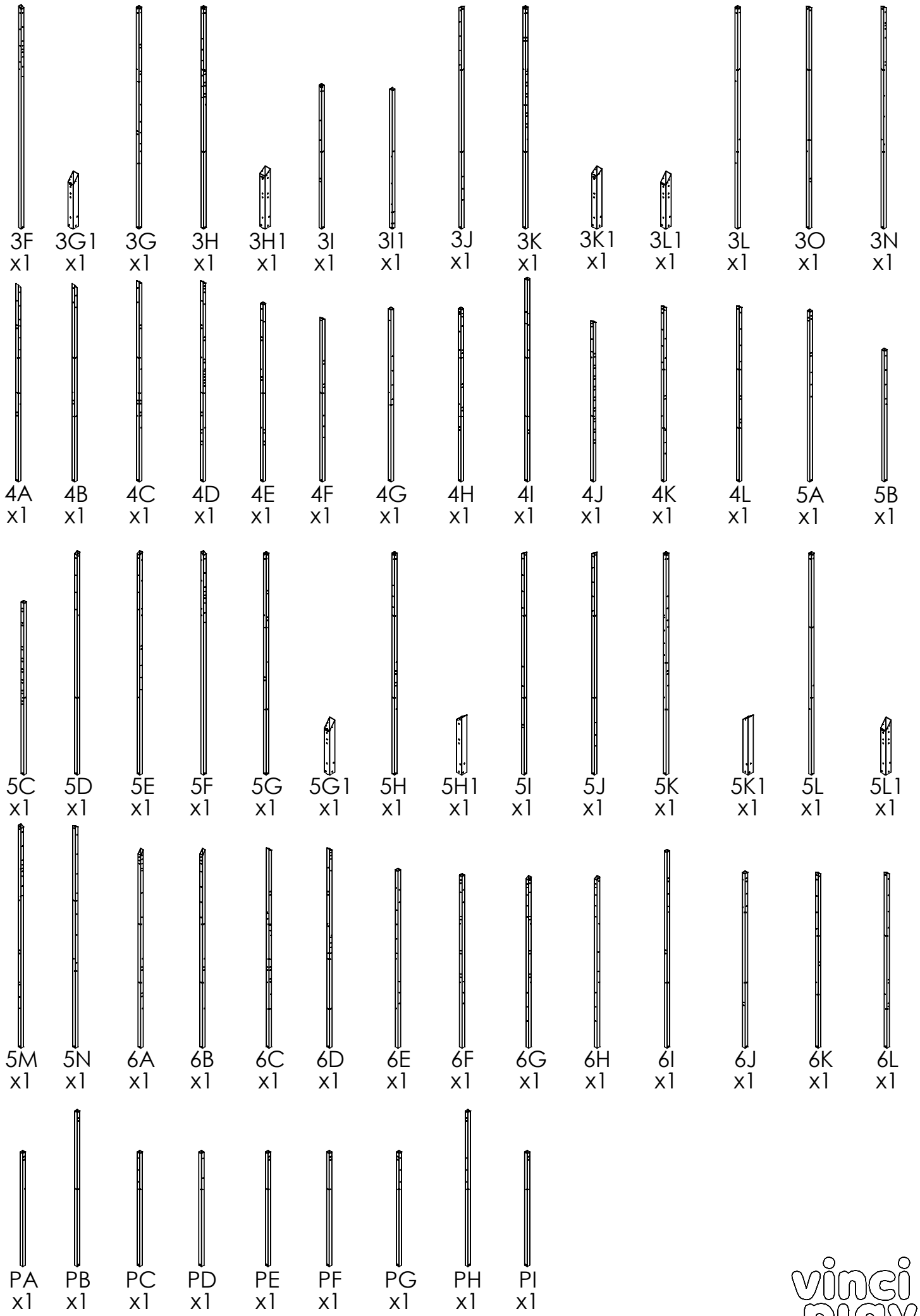
3F x1
3G1 x1
3G x1
3H x1
3H1 x1
3I x1
3I1 x1
3J x1
3K x1
3K1 x1
3L1 x1
3L x1
3O x1
3N x1
4A x1
4B x1
4C x1
4D x1
4E x1
4F x1
4G x1
4H x1
4I x1
4J x1
4K x1
4L x1
5A x1
5B x1
5C x1
5D x1
5E x1
5F x1
5G x1
5G1 x1
5H x1
5H1 x1
5I x1
5J x1
5K x1
5K1 x1
5L x1
5L1 x1
5M x1
5N x1
6A x1
6B x1
6C x1
6D x1
6E x1
6F x1
6G x1
6H x1
6I x1
6J x1
6K x1
6L x1
PA x1
PB x1
PC x1
PD x1
PE x1
PF x1
PG x1
PH x1
PI x1
[cm]
vinci play

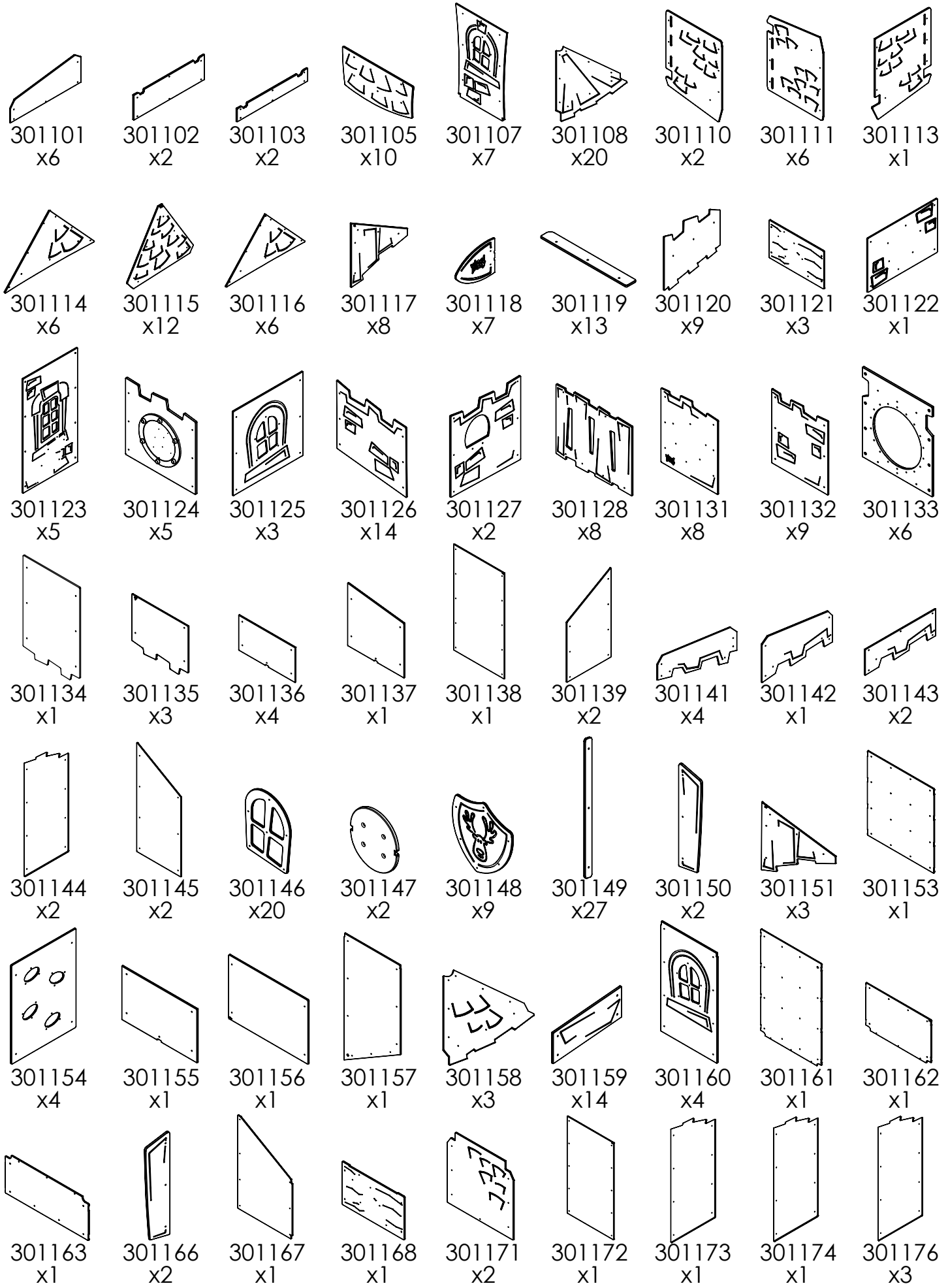
301101 x6
301102 x2
301103 x2
301105 x10
301107 x7
301108 x20
301110 x2
301111 x6
301113 x1
301114 x6
301115 x12
301116 x6
301117 x8
301118 x7
301119 x13
301120 x9
301121 x3
301122 x1
301123 x5
301124 x5
301125 x3
301126 x14
301127 x2
301128 x8
301131 x8
301132 x9
301133 x6
301134 x1
301135 x3
301136 x4
301137 x1
301138 x1
301139 x2
301141 x4
301142 x1
301143 x2
301144 x2
301145 x2
301146 x20
301147 x2
301148 x9
301149 x27
301150 x2
301151 x3
301153 x1
301154 x4
301155 x1
301156 x1
301157 x1
301158 x3
301159 x14
301160 x4
301161 x1
301162 x1
301163 x1
301166 x2
301167 x1
301168 x1
301171 x2
301172 x1
301173 x1
301174 x1
301176 x3

[cm]

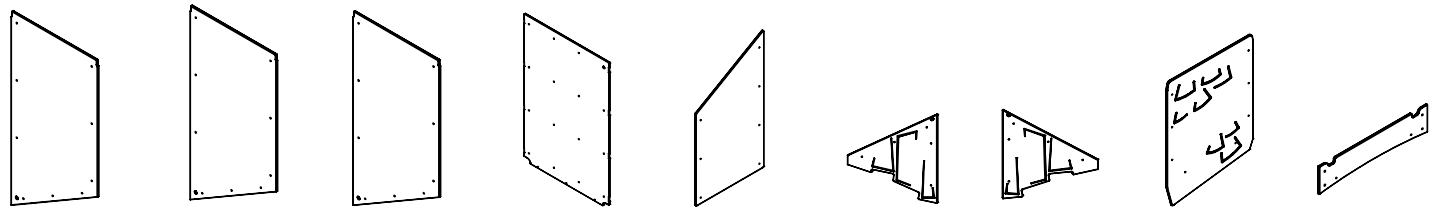

301177	301178	301179	301180	301183	301195	301196	301197	301198
x2	x2	x1	x3	x2	x1	x1	x15	x1

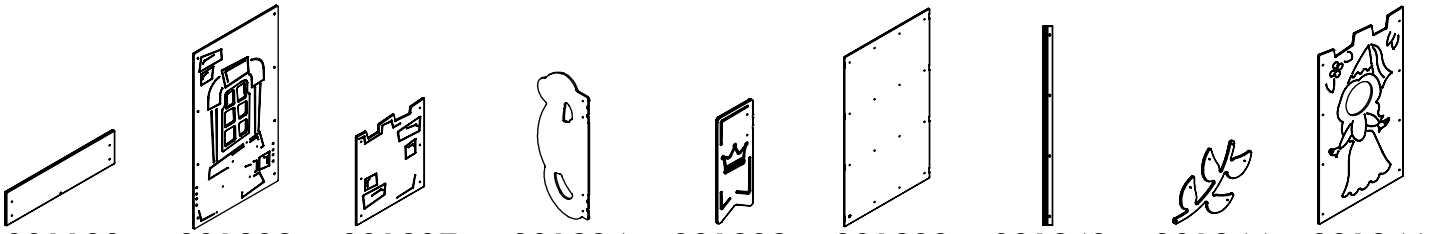

301199	301202	301207	301224	301232	301233	301243	301244	301246
x7	x1	x4	x2	x5	x3	x50	x10	x1

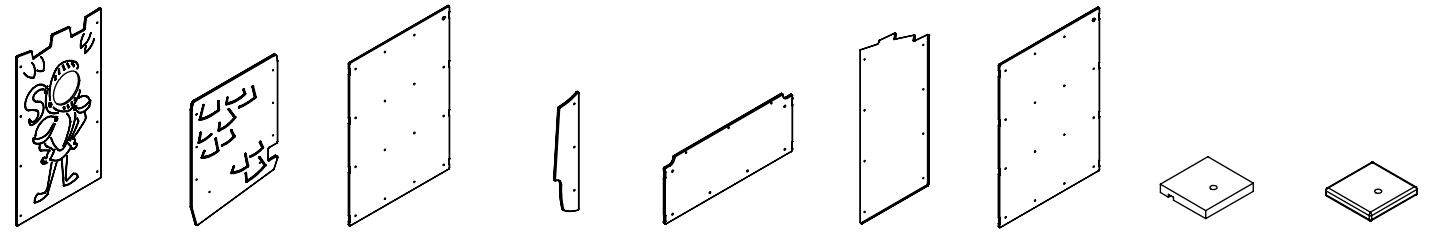

301247	301249	301250	301251	301263	301265	301266	021146	021149
x1	x1	x1	x6	x2	x1	x1	x12	x6

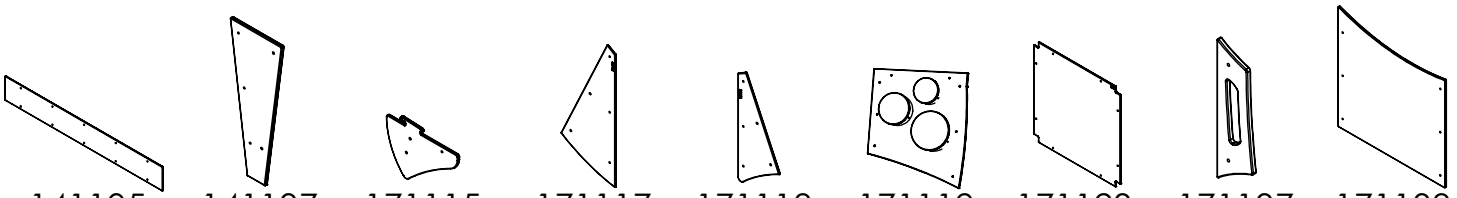

141105	141137	171115	171117	171118	171119	171123	171137	171138
x1	x14	x12	x8	x8	x3	x75	x6	x3

171140	171141	171146	171151	171152	171186	171205	171240	341155
x5	x43	x2	x1	x21	x5	x2	x30	x10

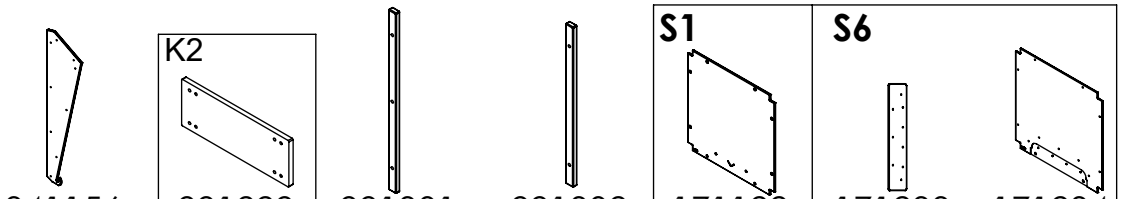

341156	K2 991229	991301	991302	S1 171122	S6 171233	171234
x10	x2	x67	x25	x3	x3	x3

[cm]

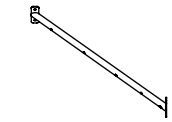

1421103
x16

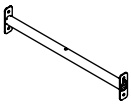

142116
x3

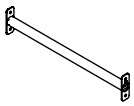

142117
x78

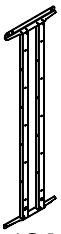

142119
x1

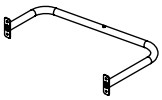

142131
x2

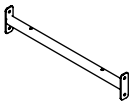

142137
x2

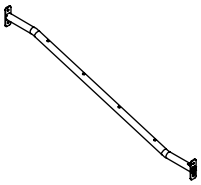

142138
x4

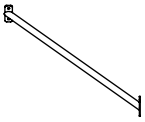

142139
x2

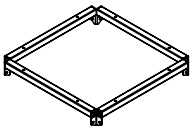

172100
x78

172101
x45

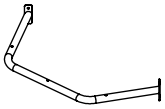

172115
x6

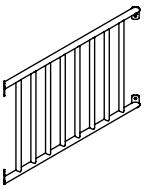

172116
x1

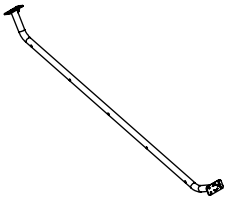

172123
x4

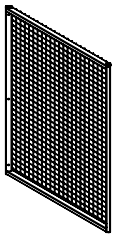

172126
x2

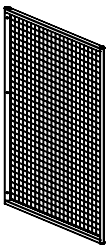

172127
x8

302116
x6

302124
x12

K2

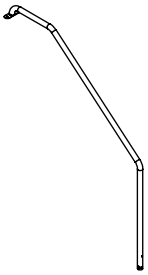

992109
x4

K3

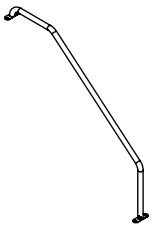

992138
x4

K2

992126
x2

K3

992127
x2

K2

992311
x6

K3

992355
x6

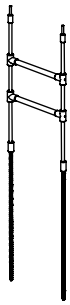

145127
x1

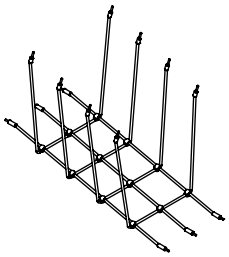

145141
x1

145167
x2

145168
x2

145169
x2

145170
x2

145242
x2

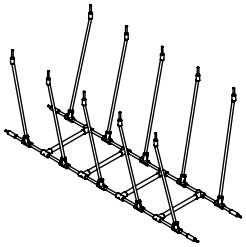

175101
x2

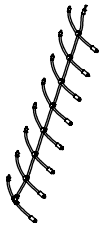

175108
x6

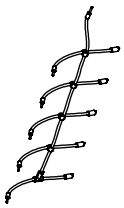

175109
x6

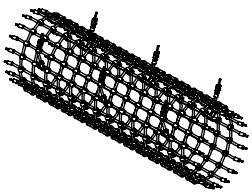

305100
x3

305101
x1

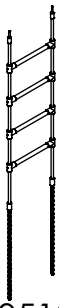

305102
x1

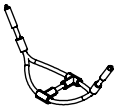

305113
x8

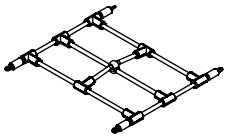

995142
x3

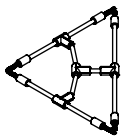

995143
x1

[cm]

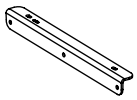
b144
x2

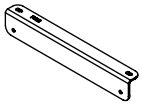
b203
x4

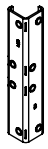
b330
x18

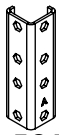
b525
x24

b674
x2

b675
x7

b676
x4

b677
x6

b678
x18

b679
x13

b680
x17

b681
x25

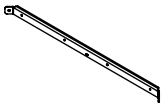
i391
x50

K2

p78
x6

K3

b219
x6

S1

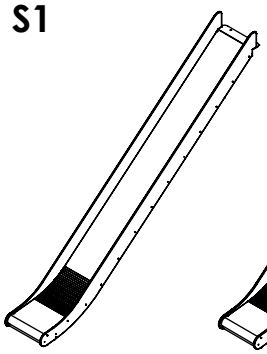
994107
x1

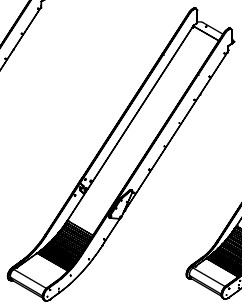
994106
x1

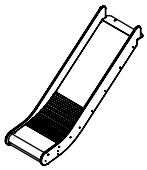
994103
x1

S6

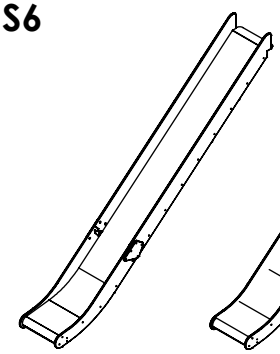
994176
x1

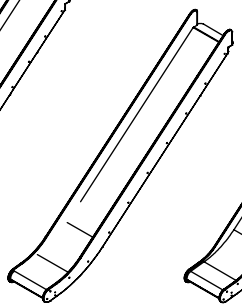
994161
x1

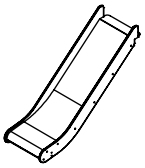
994150
x1

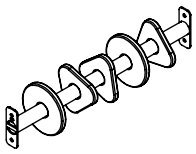
304104
x3

S3

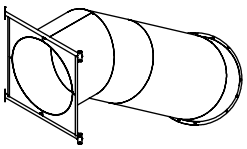
030.570.360.L.35.01
x1

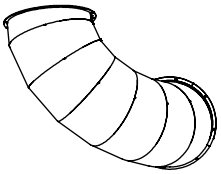
030.570.360.L.35.04
x1

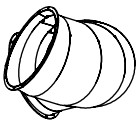
030.570.360.L.35.05
x1

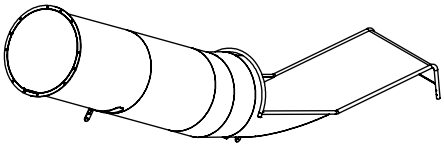
030.570.360.L.35.03
x1

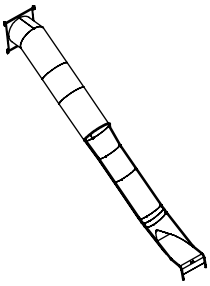
030.360.000.F.35
x1

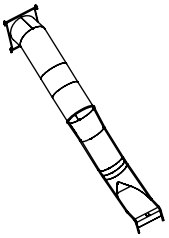
030.270.000.F.35
x2

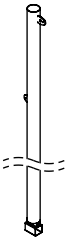
030.000.116
x1

302122
x3

302123
x1

302125
x1

303119
x8

[cm]

S2

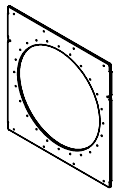

301253
x4

301243
x8

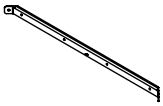

i391
x8

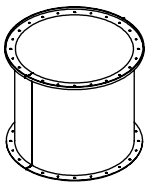

996421
x21

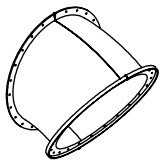

996420
x4

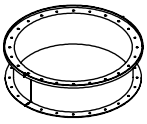

996419
x9

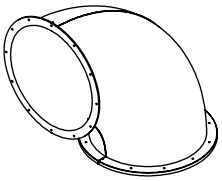

996465
x8

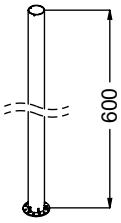

992321
x1

992315
x1

302154
x1

302155
x1

302156
x1

b711
x6

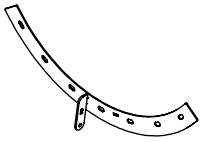

992313
x5

b708
x8

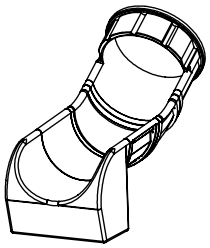

996467
x4

992349
x2

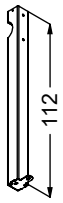

992350
x1

992351
x2

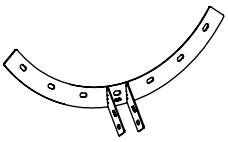

992267
x4

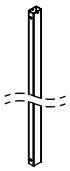

993177
x1

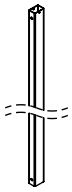

993193
x1

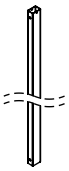

993192
x2

[cm]

Qty.	
5	drut (S2)
8	drut (S3)
55	8pp
2	8x16ikl (S2)
428	8x25ikl
380	8x30ikl
11	10nk (S2)
1733	10pp
10	10pp (S2)
16	10pp (S3)
2	10x20ikl (S2)
2159	10x25ikl
13	10x25ikl (S2)
28	10x25ikl (S3)
24	10x30ikl
8	10x40ikl
4	12e035
23	17c004
2	17c018
8	17c026
3	17c032
3	17e007 (S3)
2	17e024
1	17e031
1	17e036
8	17e050
13	17e111
1	17p001
4	17p003
51	17p005
67	17p007
2	17p009
6	17p015
3	17p017 (S1)
3	17p019 (S6)
1	17p021
4	17p023
3	17p061 (S6)
4	30c002
8	30c006
7	30c012
6	30c056
1	30c058
15	30c060
2	30c062
25	30c068
27	30c070
10	30c106
8	30c108
13	30c110
1	30c112
28	30c114
12	30c118
2	30c120
19	30c124
10	30c148
12	30c152
6	30c154

Qty.	
4	30c156 (S2)
4	30c162 (S2)
8	30e002 (S3)
3	30e003 (S3)
3	30e005 (S2)
4	30e010 (S3)
6	30e016
6	30e019
10	30e032
1	30e041 (S2)
19	30e056
12	30e057
12	30e058
3	30e059
12	30e067
6	30e068
1	30e071
11	30e072
1	30e073
3	30e074
6	30e075
8	30e080
2	30e083
3	30e084
29	30e090 (S2)
4	30e091 (S2)
9	30e093 (S2)
1	30e094 (S2)
9	30e095 (S2)
3	30e096 (S2)
4	30e102 (S2)
1	30e105 (S3)
1	30p065
10	C116
12	E15
3	E35
8	E38
4	E39
2	E80
5	E250 (S2)
2	WD14-1
1	WD14-2
7	WD14-3
4	WD14-4
7	WD52
8	WD67
8	WD68
1	V001
1	GL
2	SGL
15	302136
2	302153 (S2)

[cm]

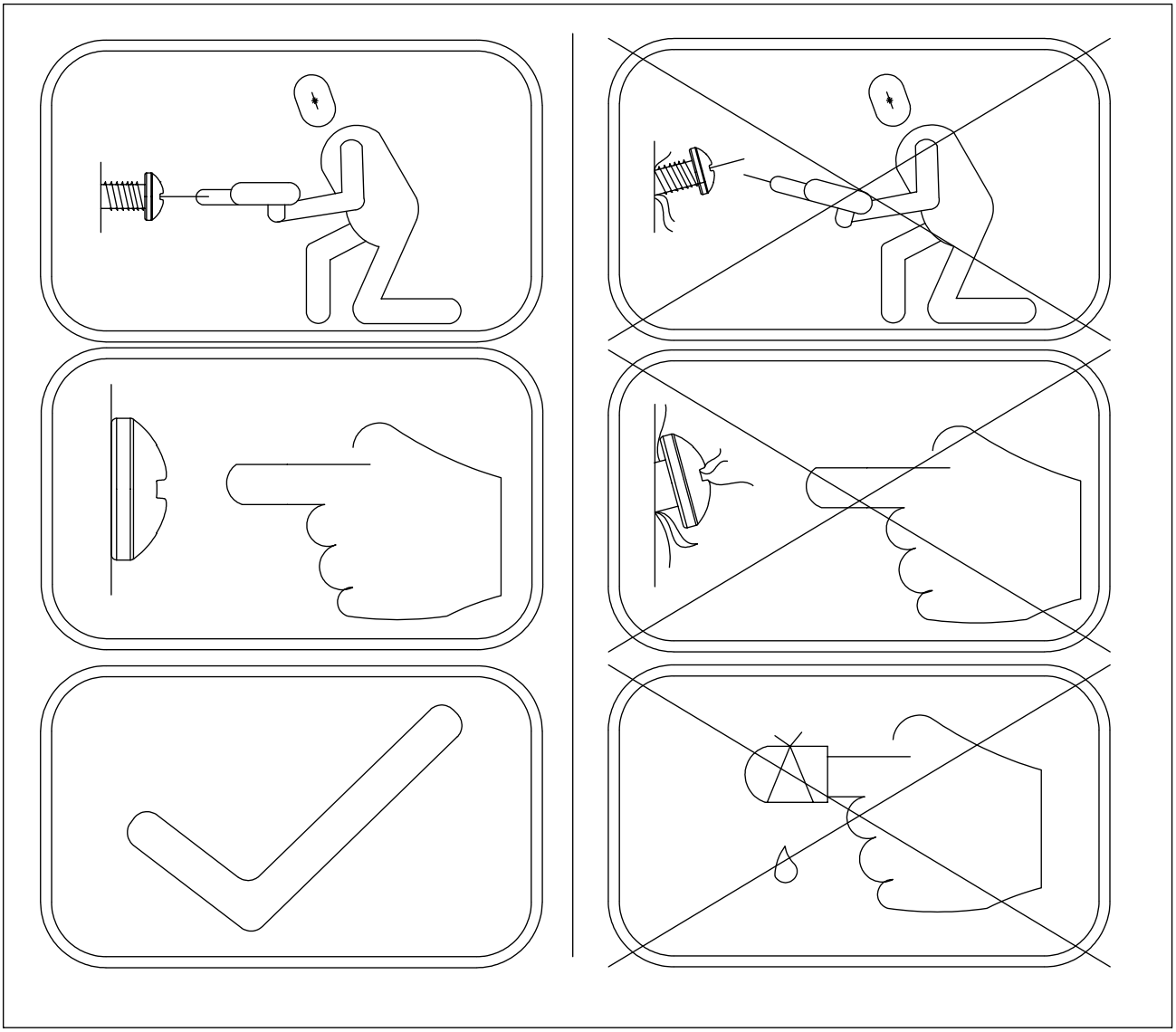

[cm]

vinci play

3060-1.01

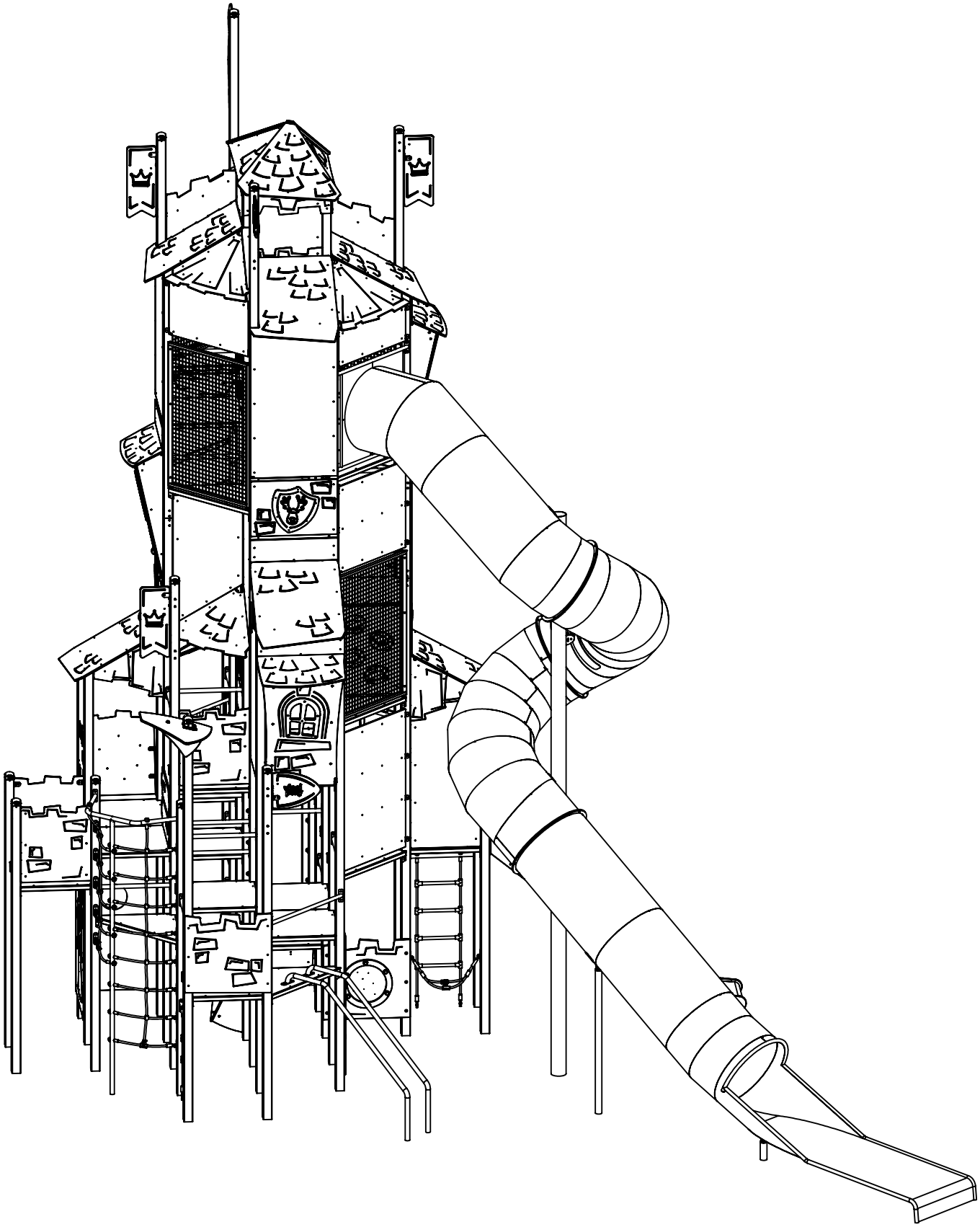

[cm]

vinci play

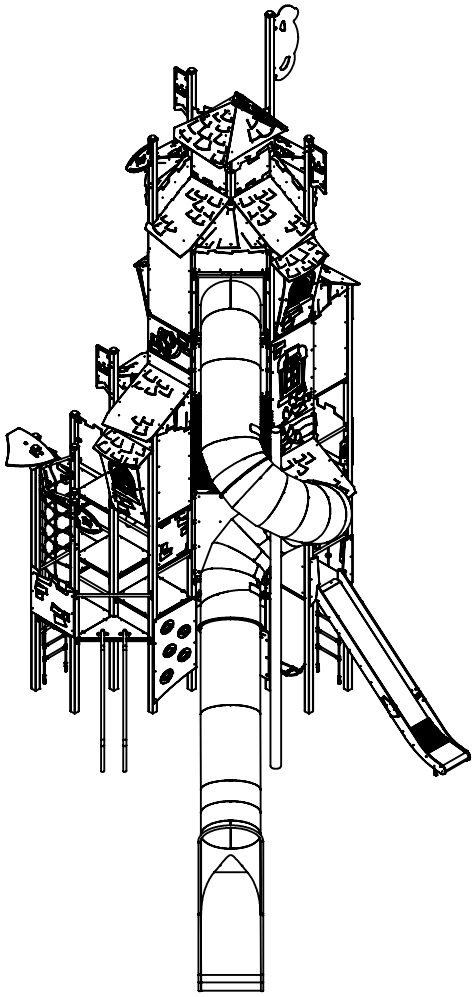

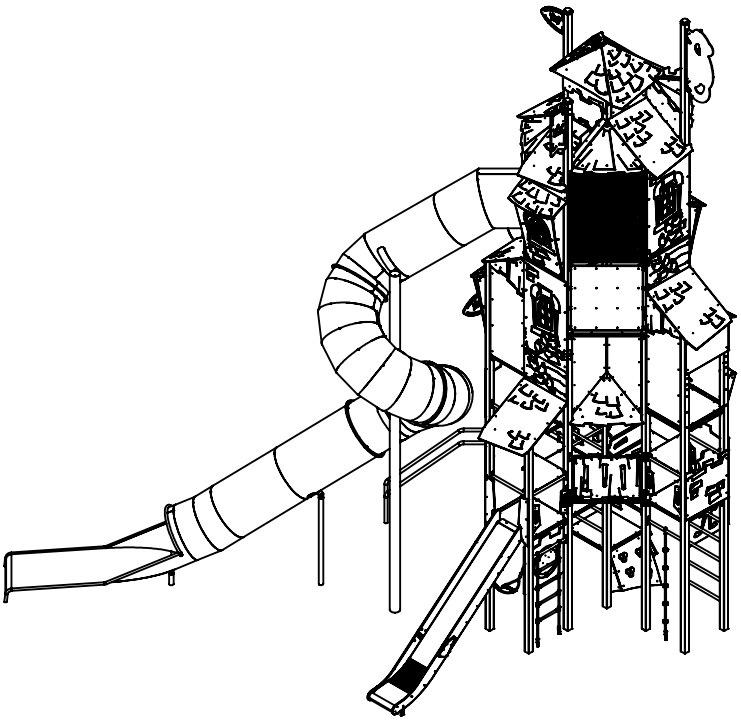

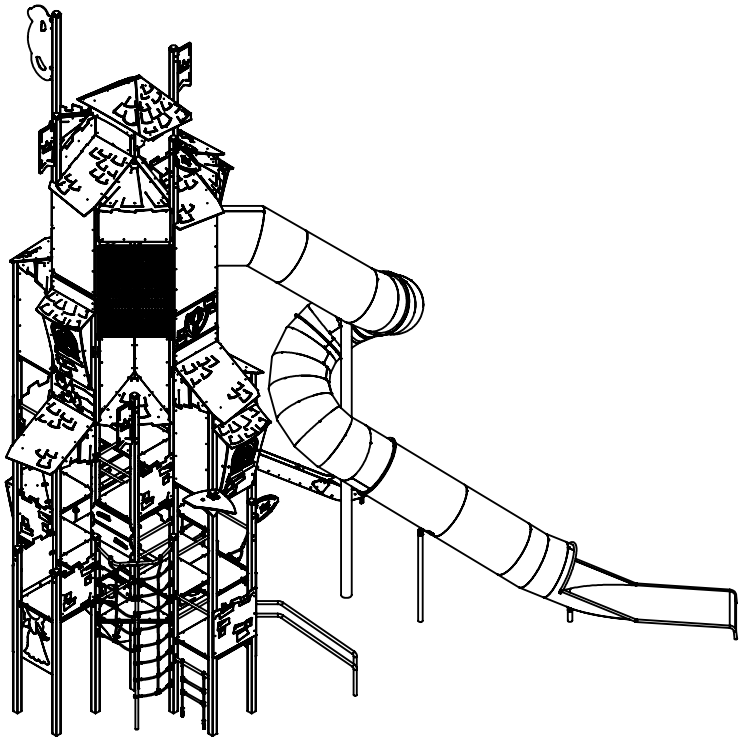

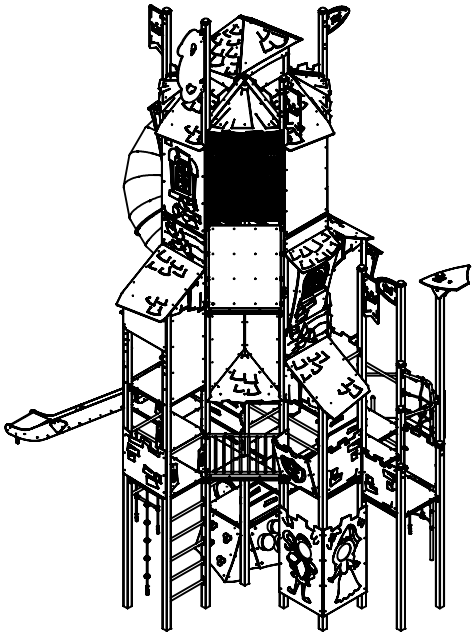

[cm]

vinci play

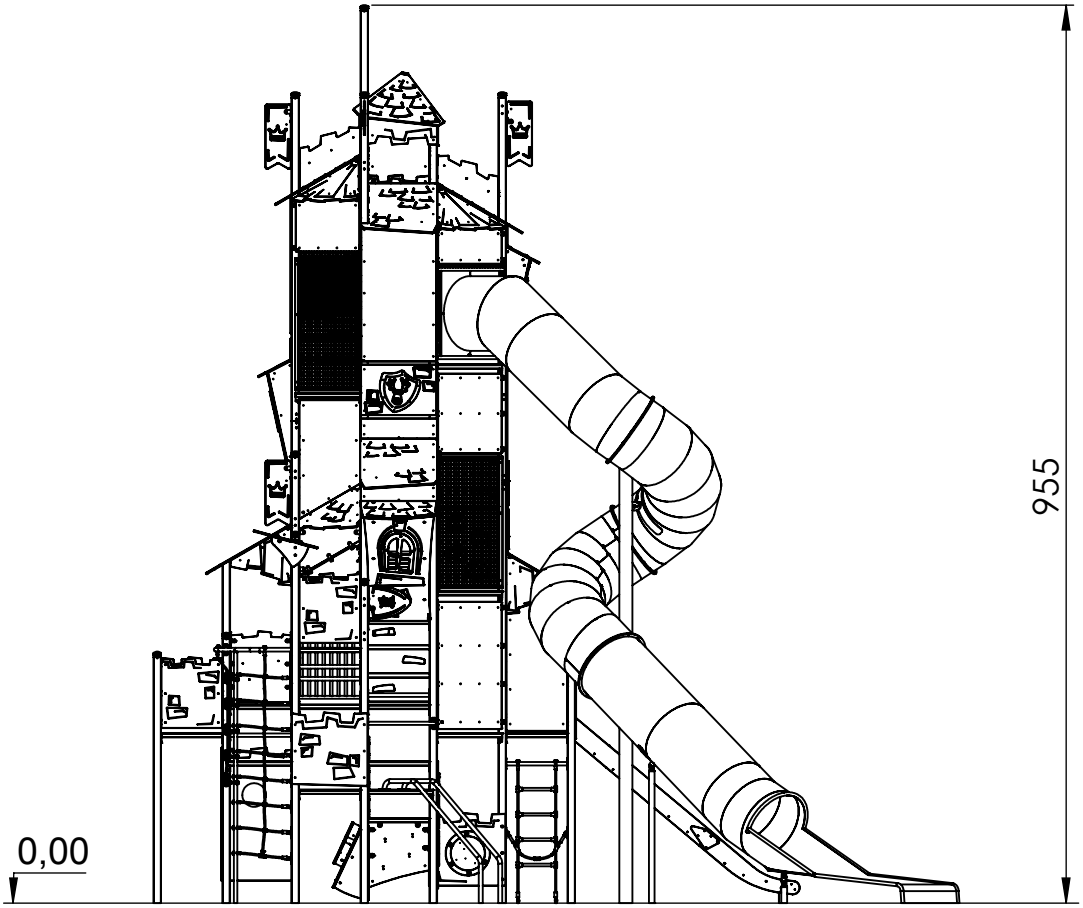

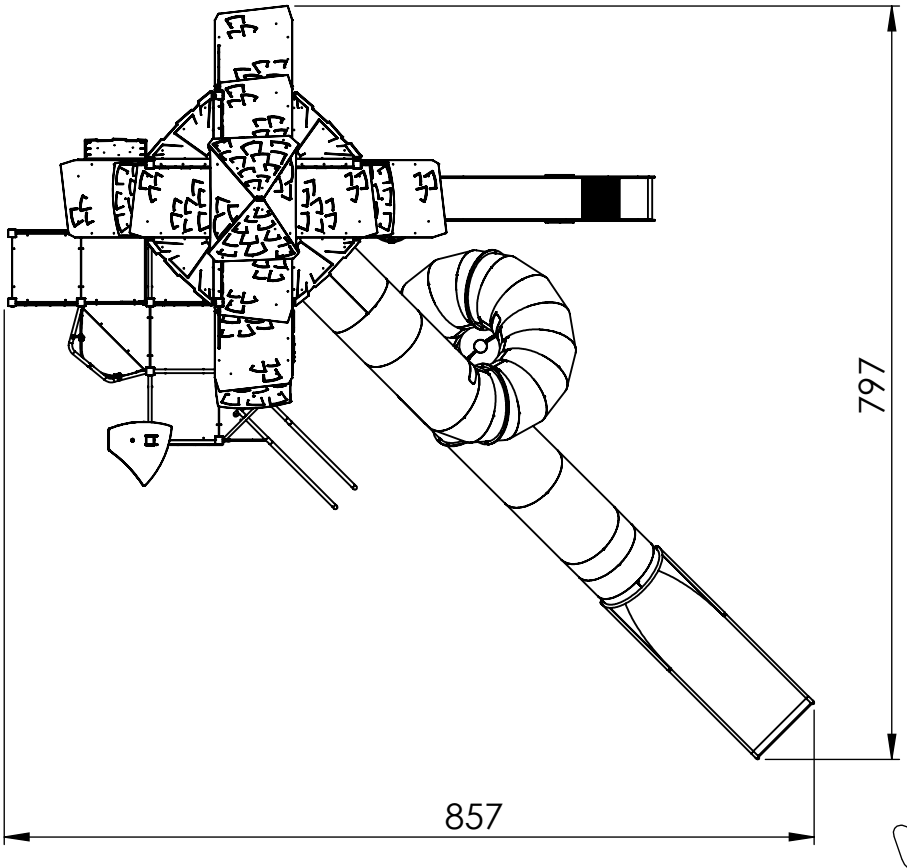

[cm]

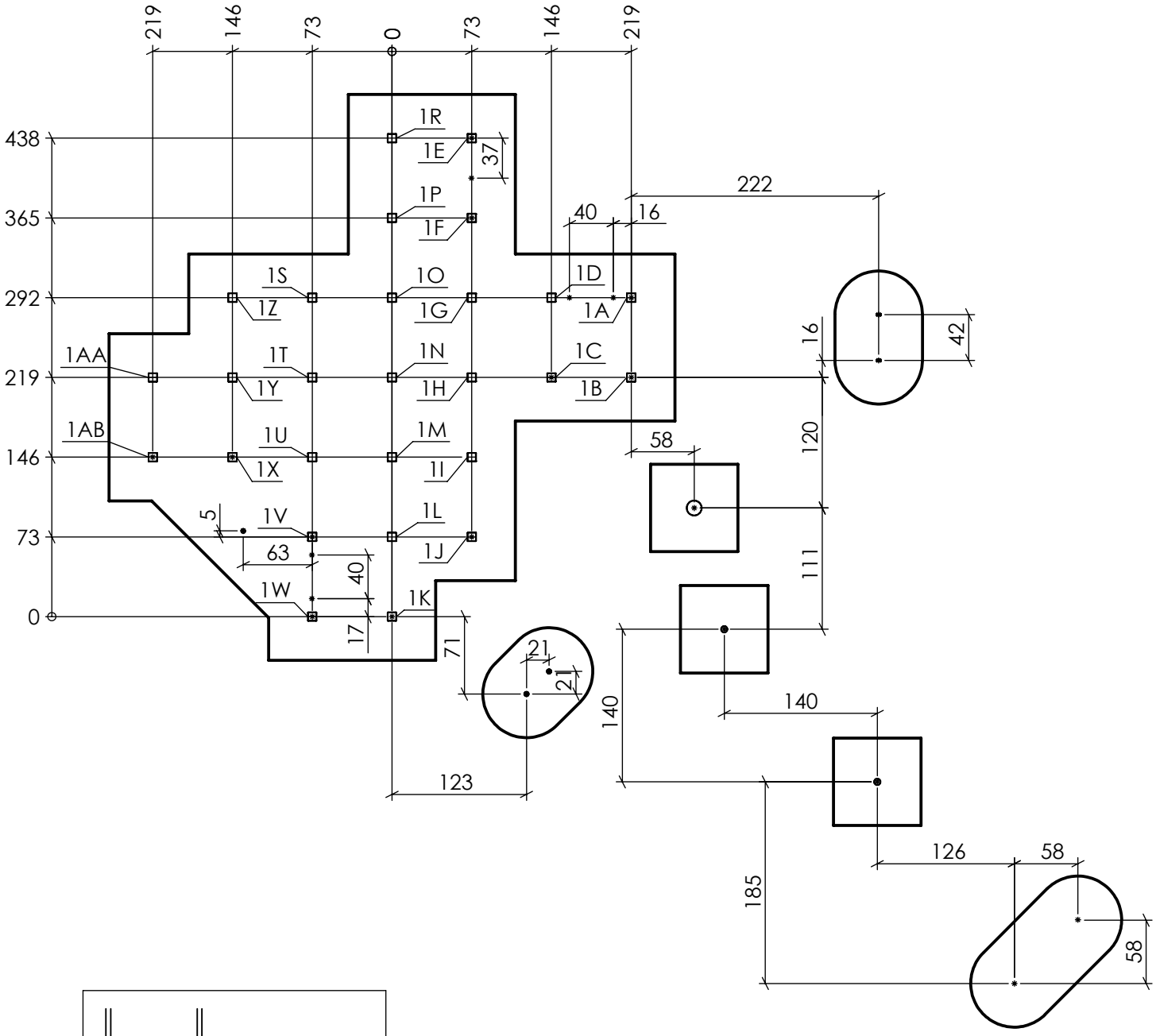
219
146
73
0
73
146
219
438
365
292
219
146
73
0
1R
1E
37
1P
1F
1S
1O
1D
1Z
1G
1A
1AA
1T
1N
1C
1Y
1H
1B
1AB
1U
1M
1X
1I
5
1V
1L
63
1J
40
1W
1K
17
71
21
21
123
40
16
222
16
42
120
58
111
140
140
185
126
58
58

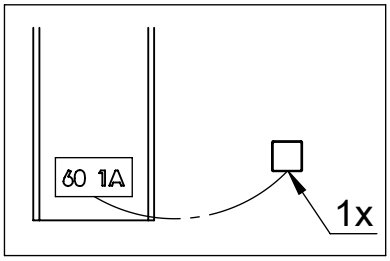
60 1A
1x

[cm]

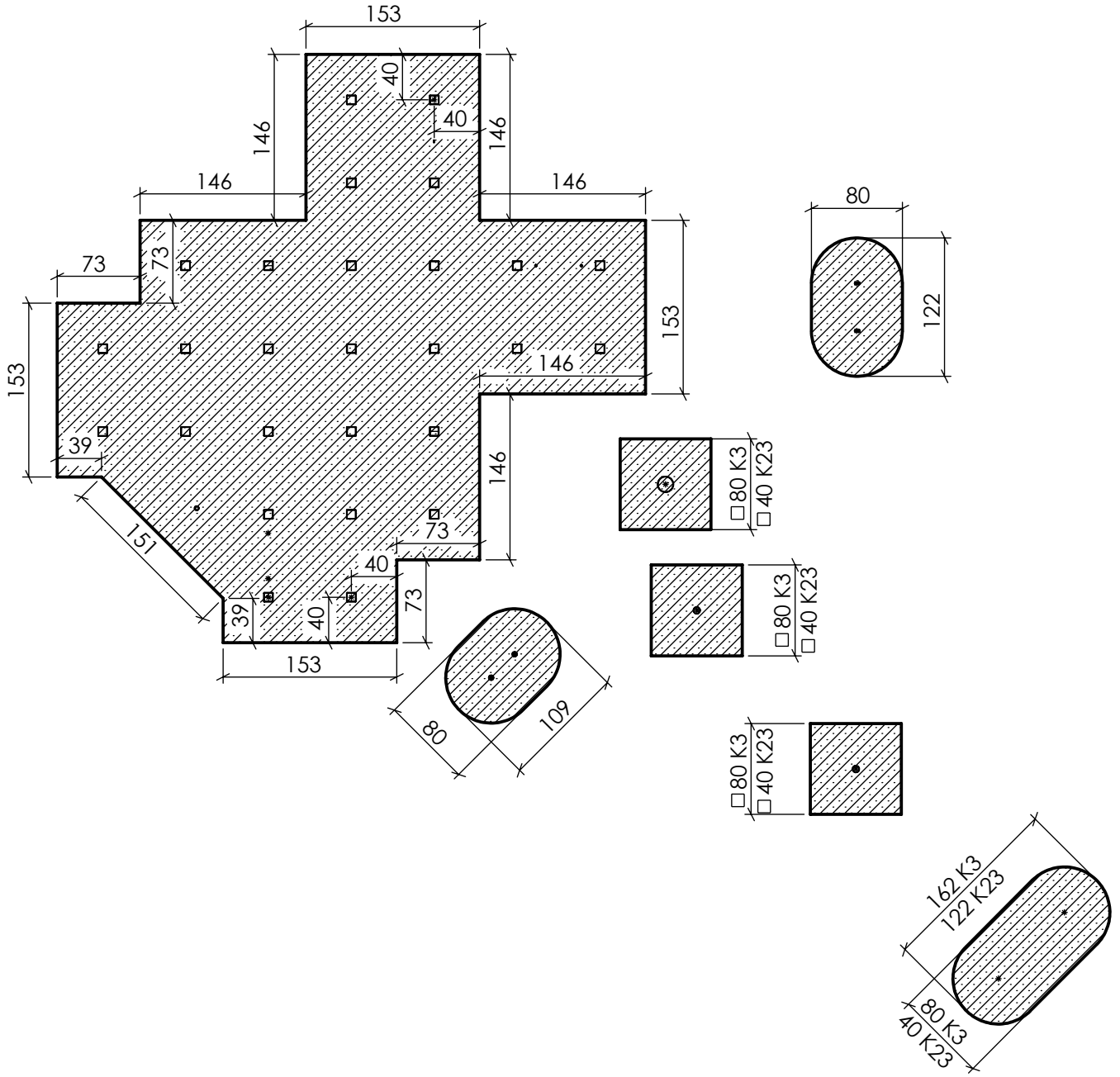
153
40
40
146
146
146
146
73
73
153
153
146
39
146
151
73
40
39
40
73
153
80
109
80
122
80 K3
40 K23
80 K3
40 K23
80 K3
40 K23
162 K3
122 K23
80 K3
40 K23

[cm]

3060-1.01S2

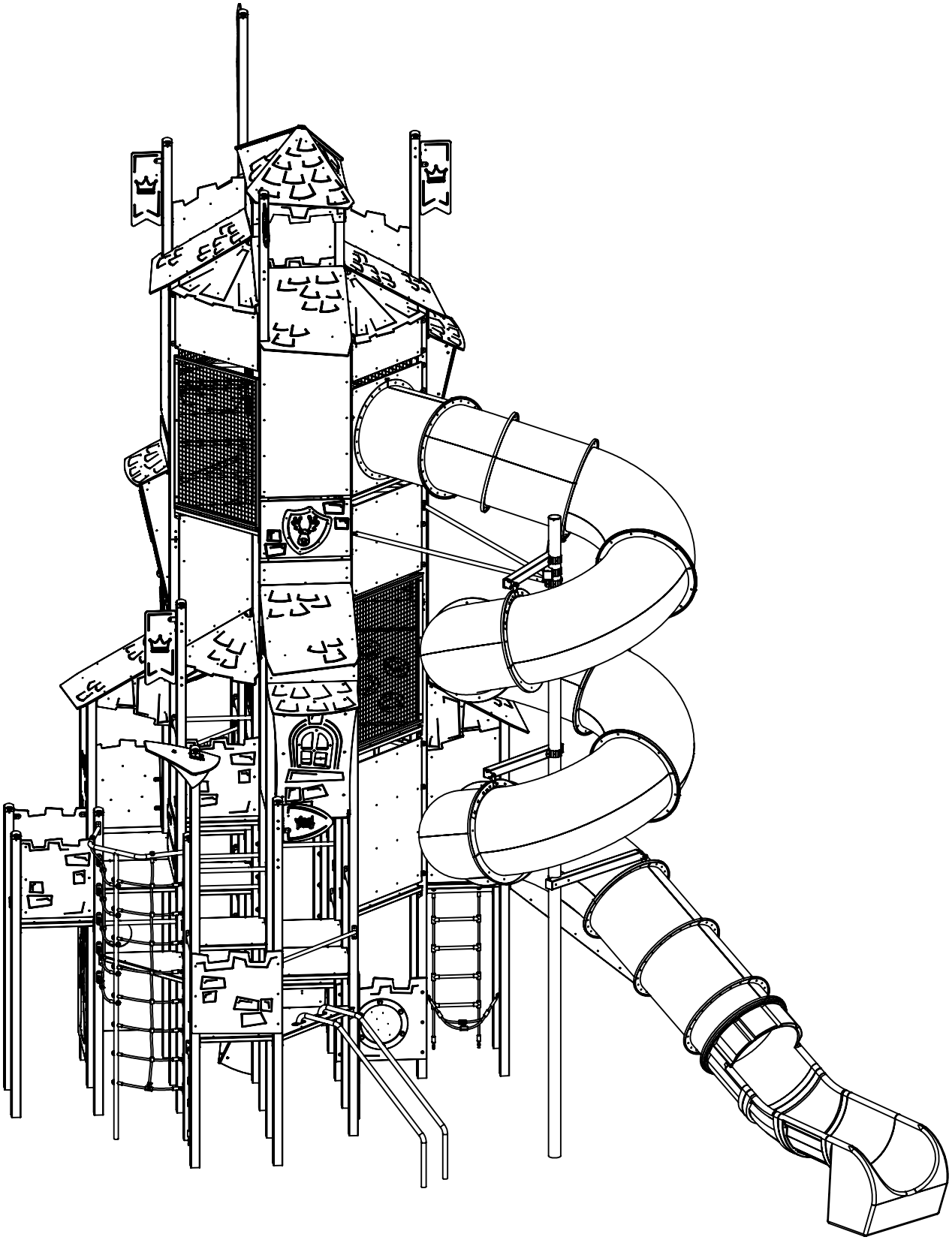

[cm]

3060-1.01S2

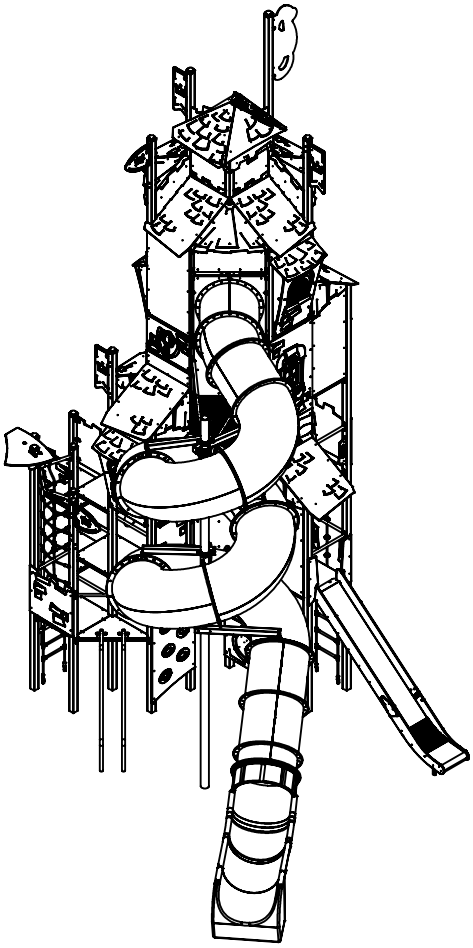

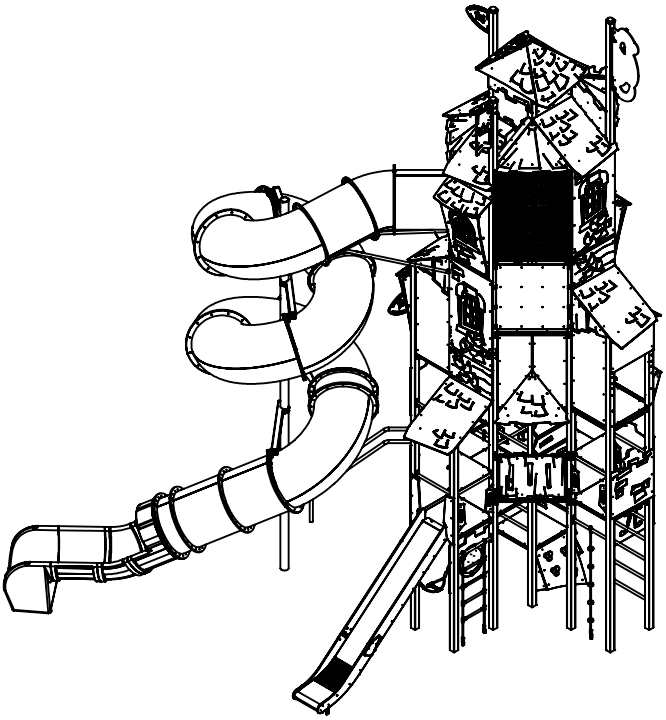

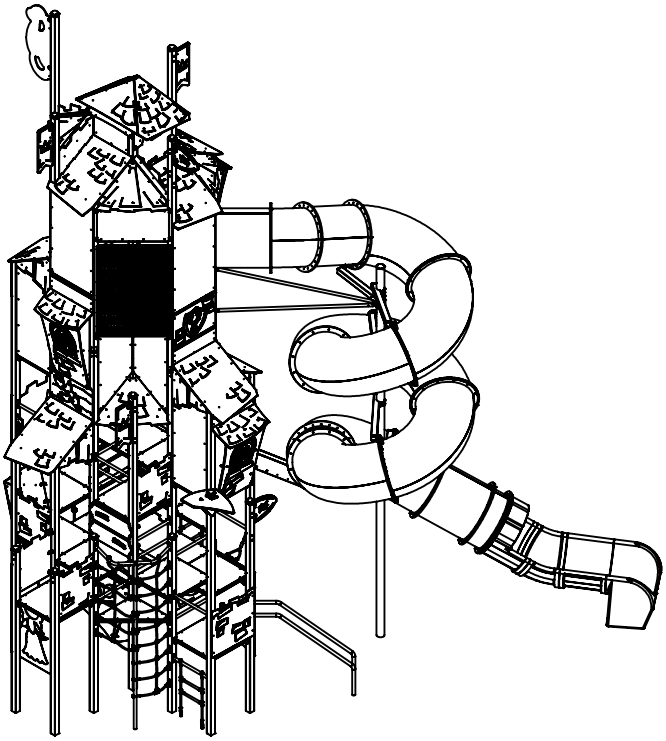

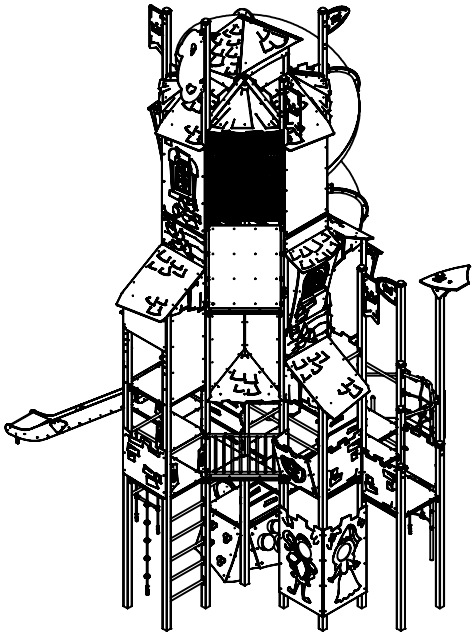

[cm]

3060-1.01S2

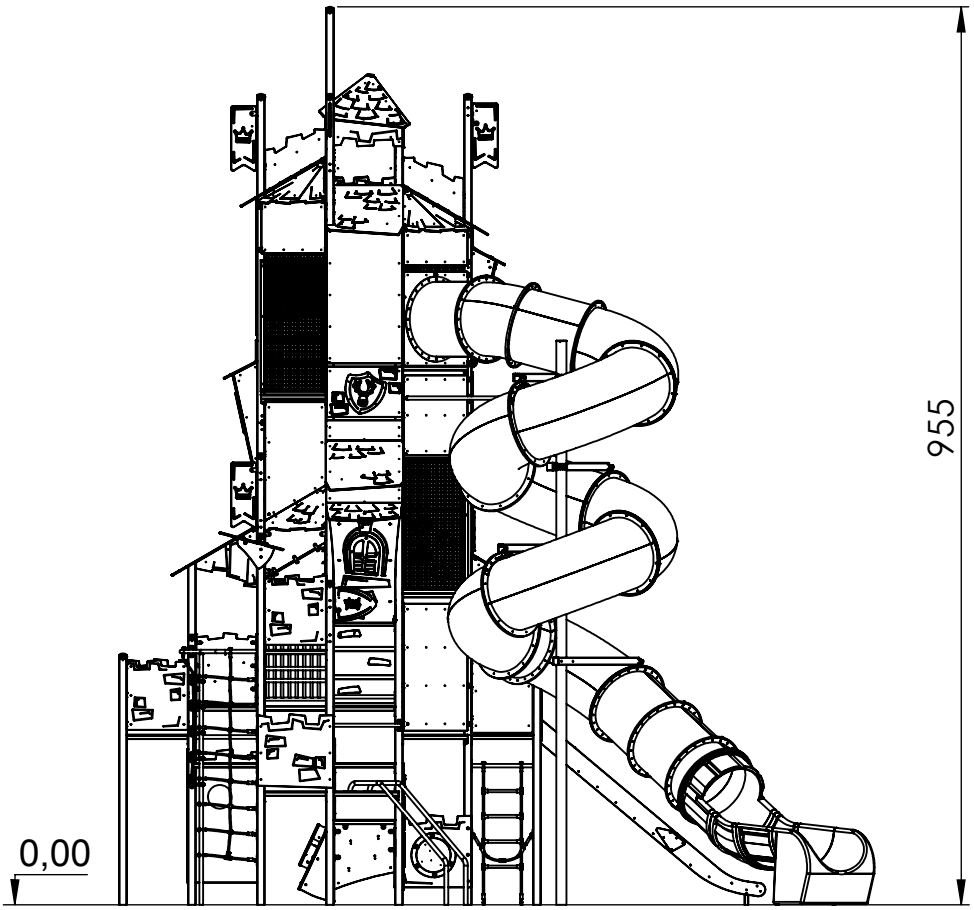

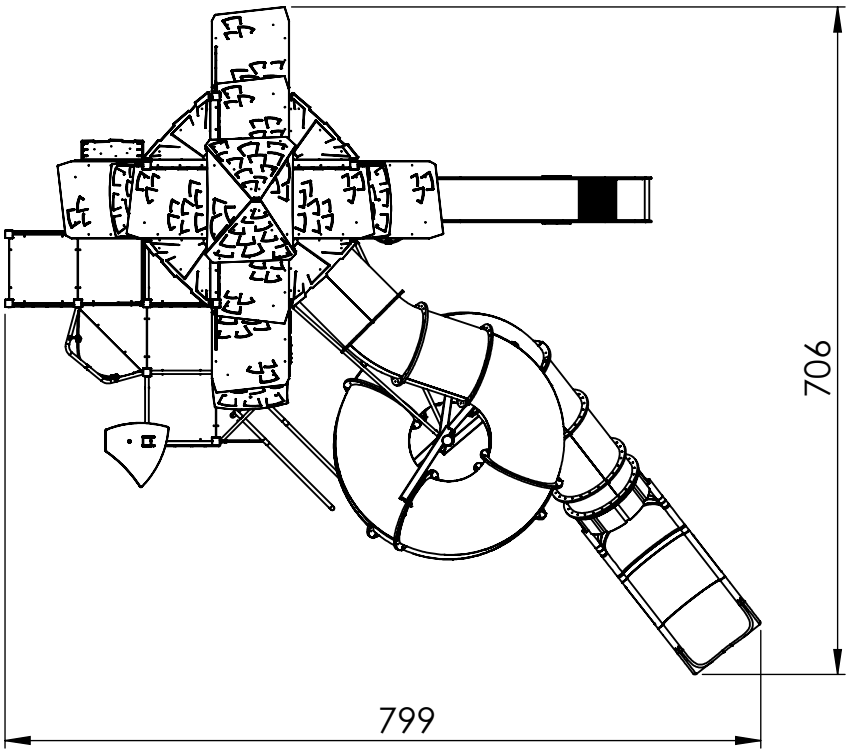

[cm]

3060-1.01S2

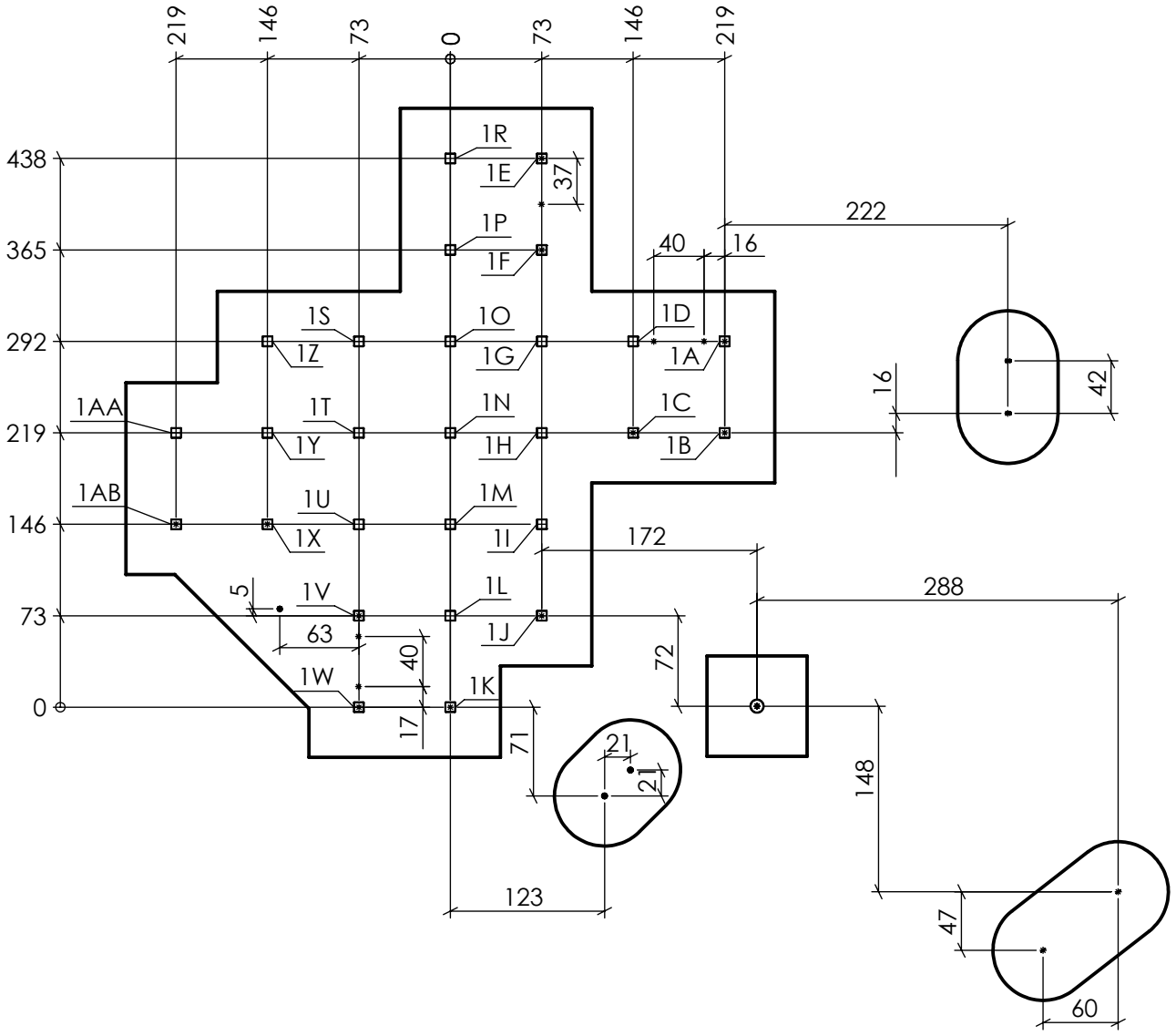

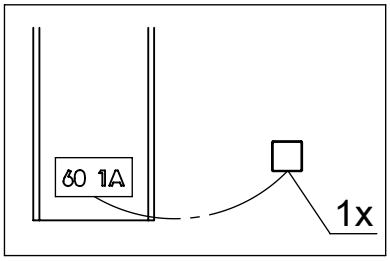

[cm]

3060-1.01S2

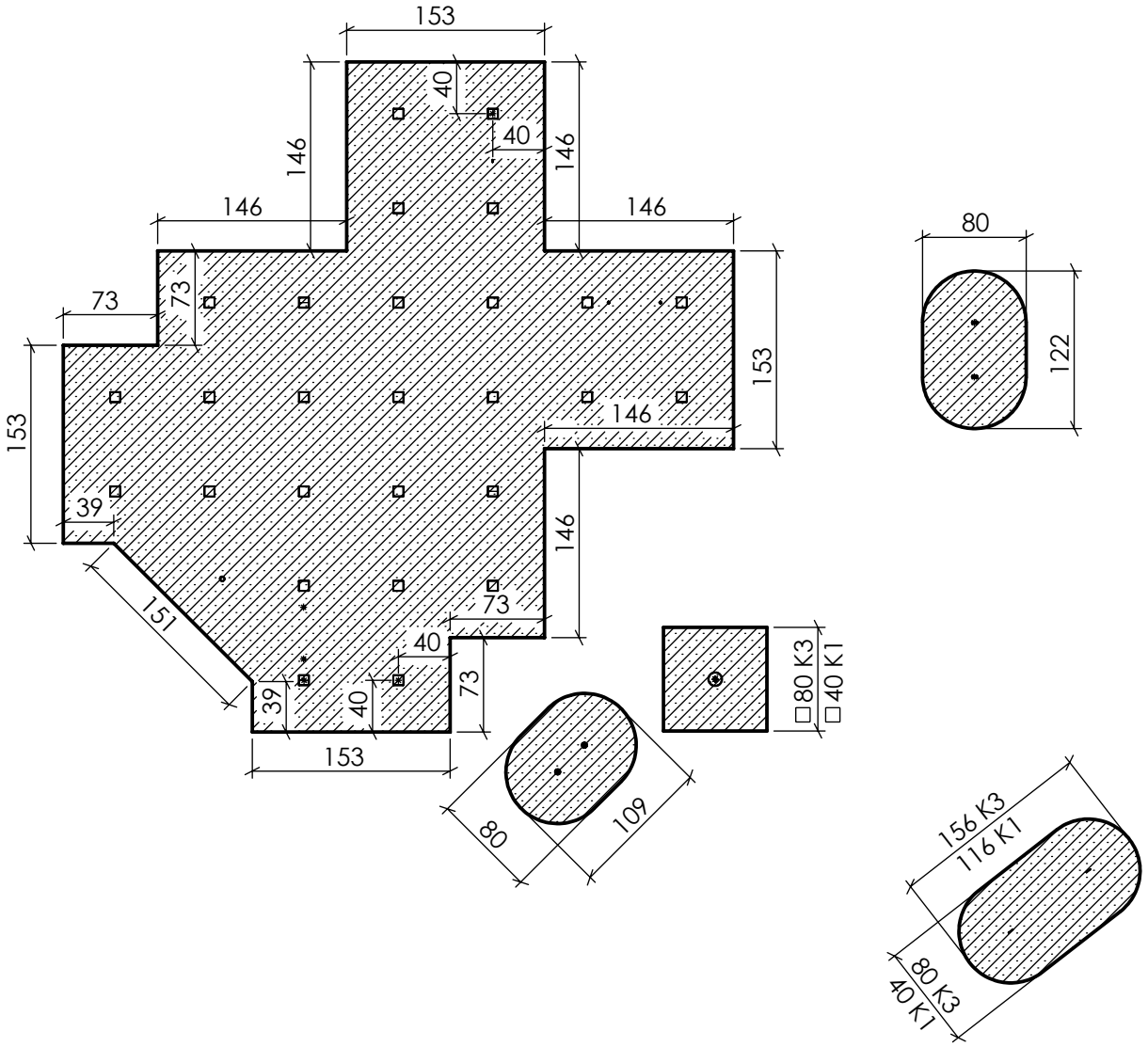

[cm]

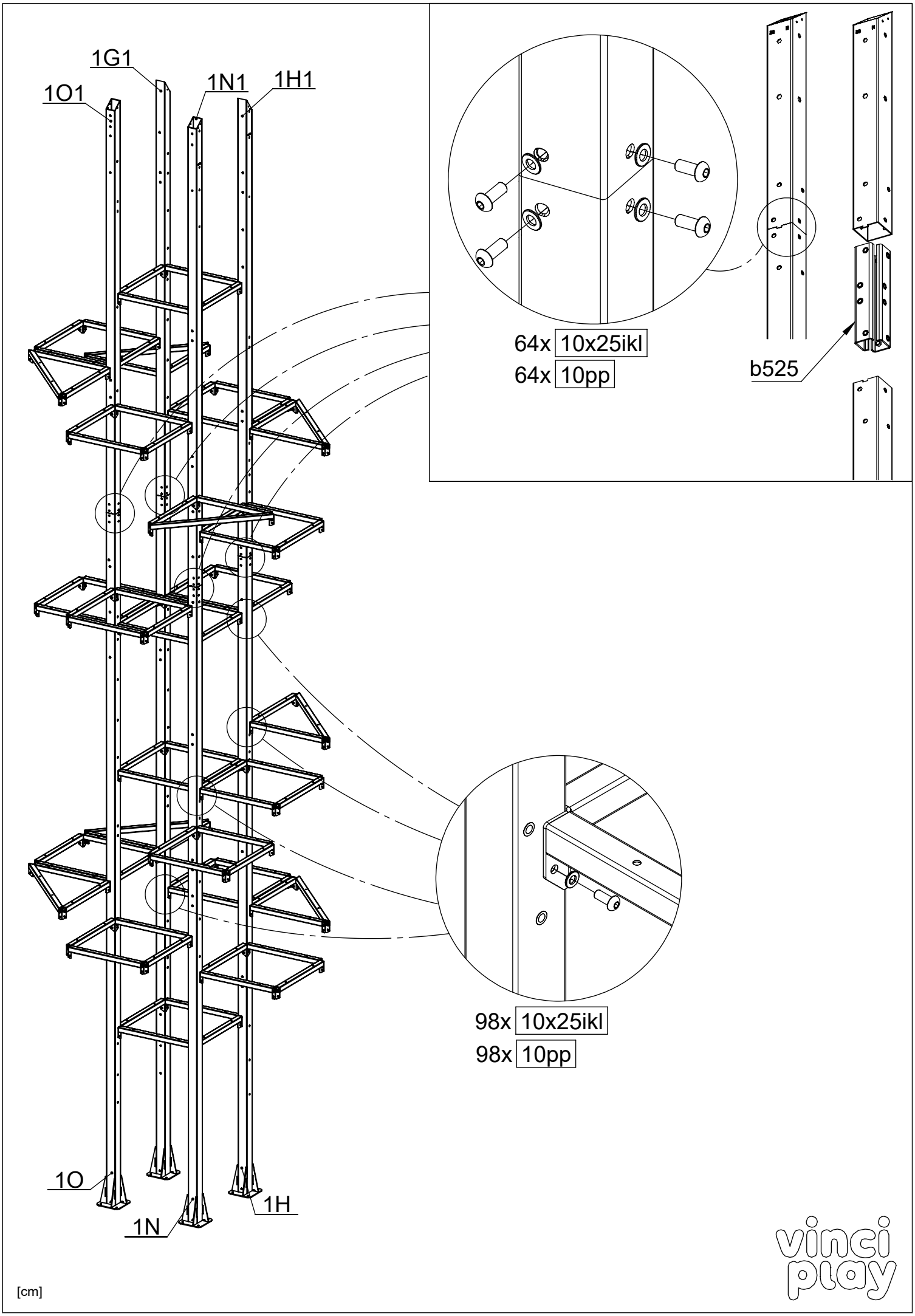
1G1
1O1
1N1
1H1
64x 10x25ikl
64x 10pp
b525
98x 10x25ikl
98x 10pp
1O
1N
1H
[cm]
vinci play

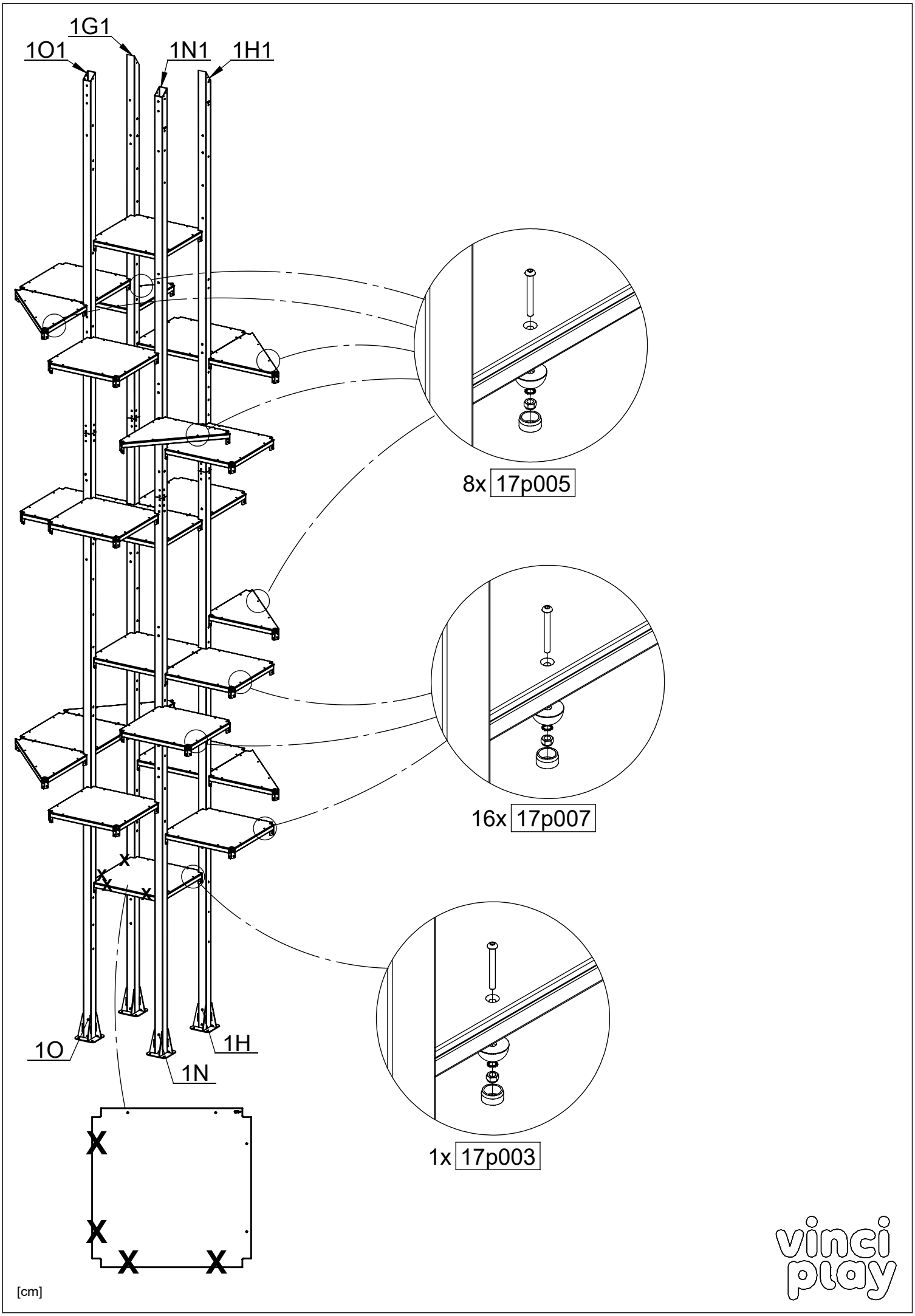
1G1
1O1
1N1
1H1
8x 17p005
16x 17p007
1O
1H
1N
1x 17p003
[cm]
vinci play

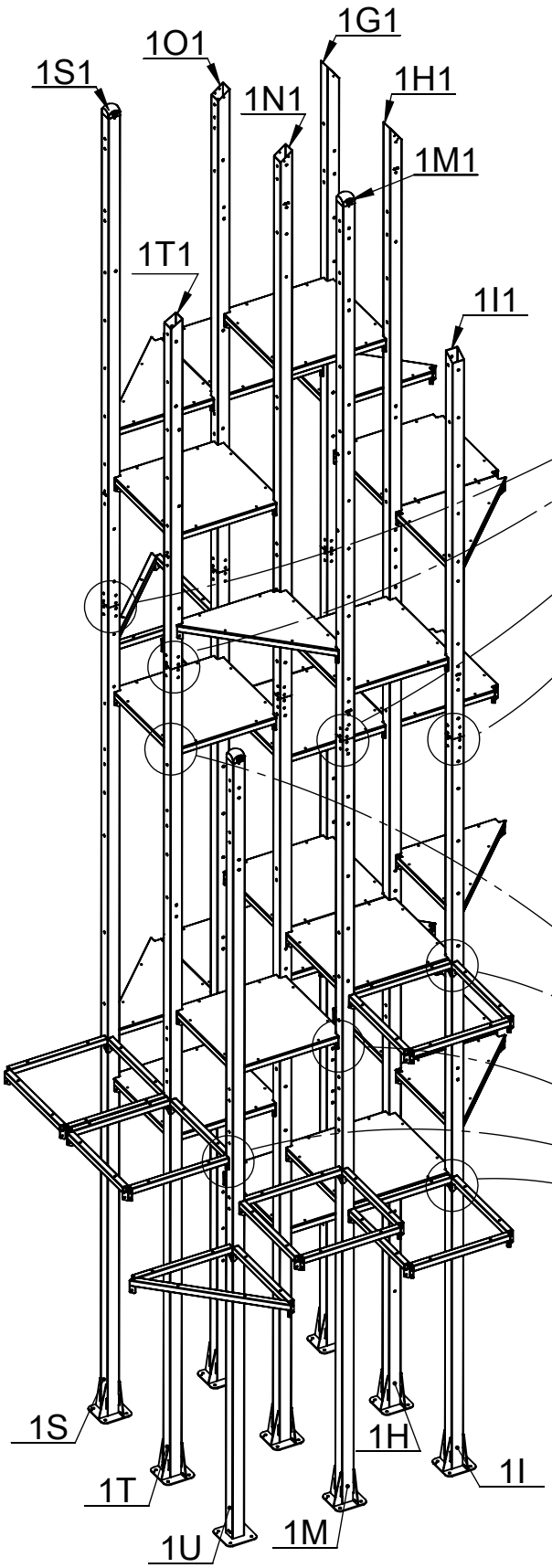

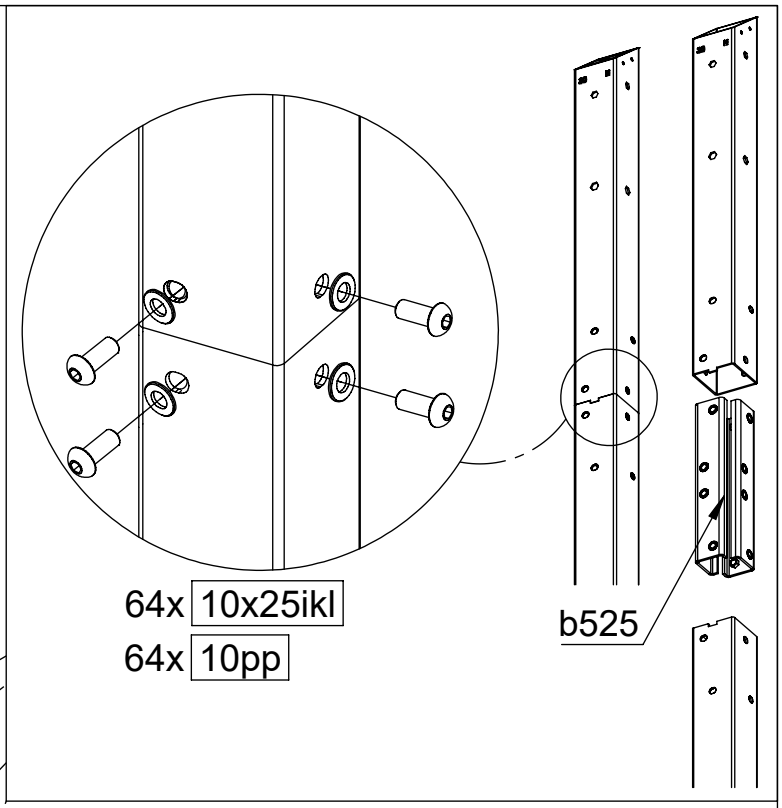

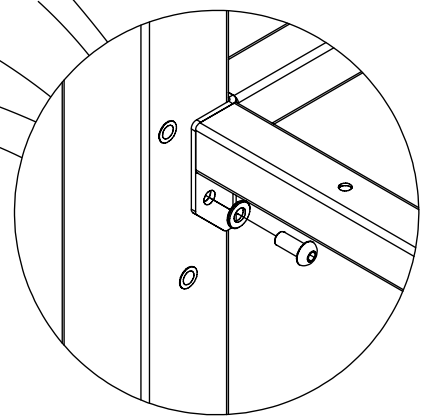

[cm]

vinci play

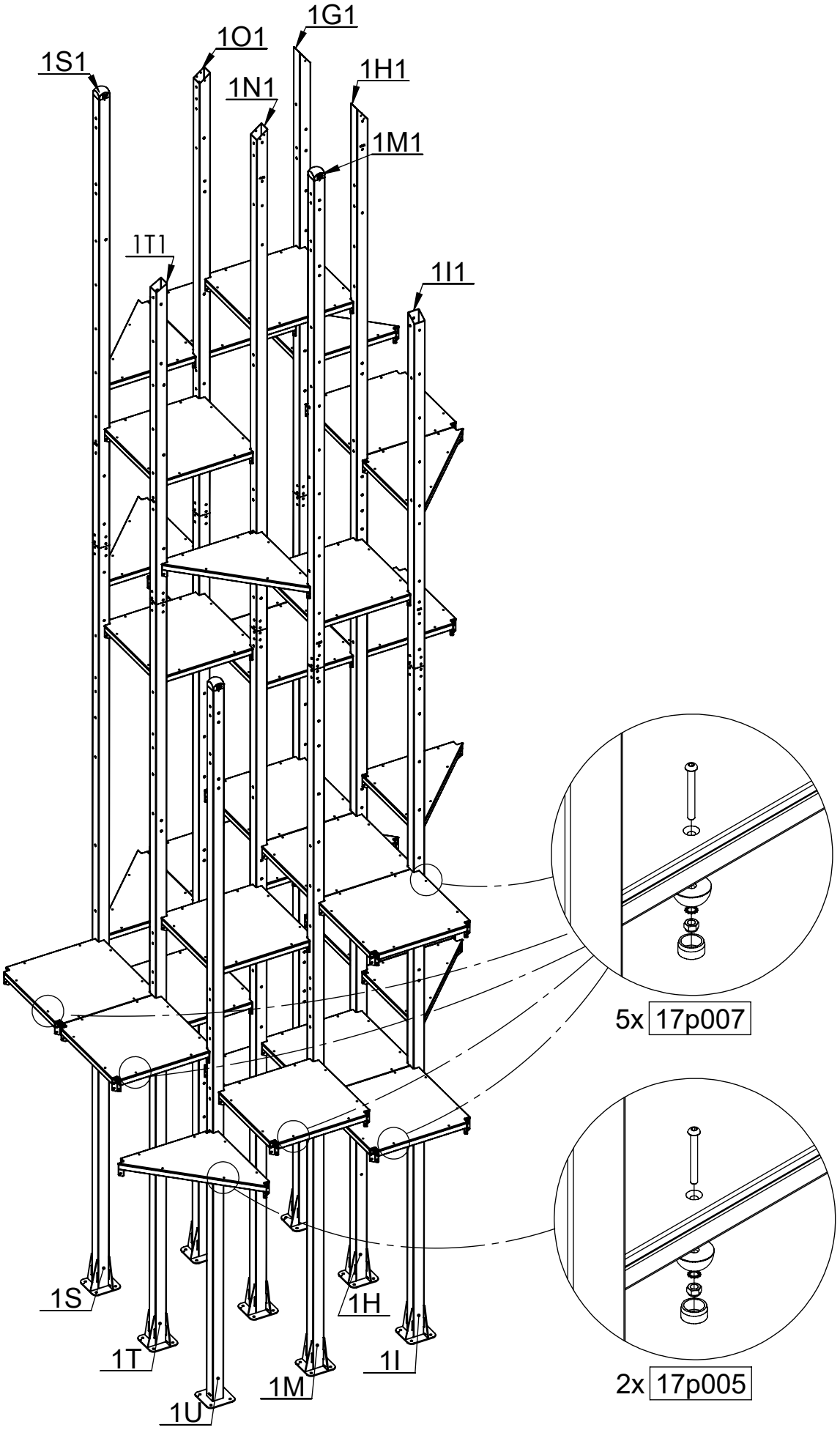

[cm]

vinci play

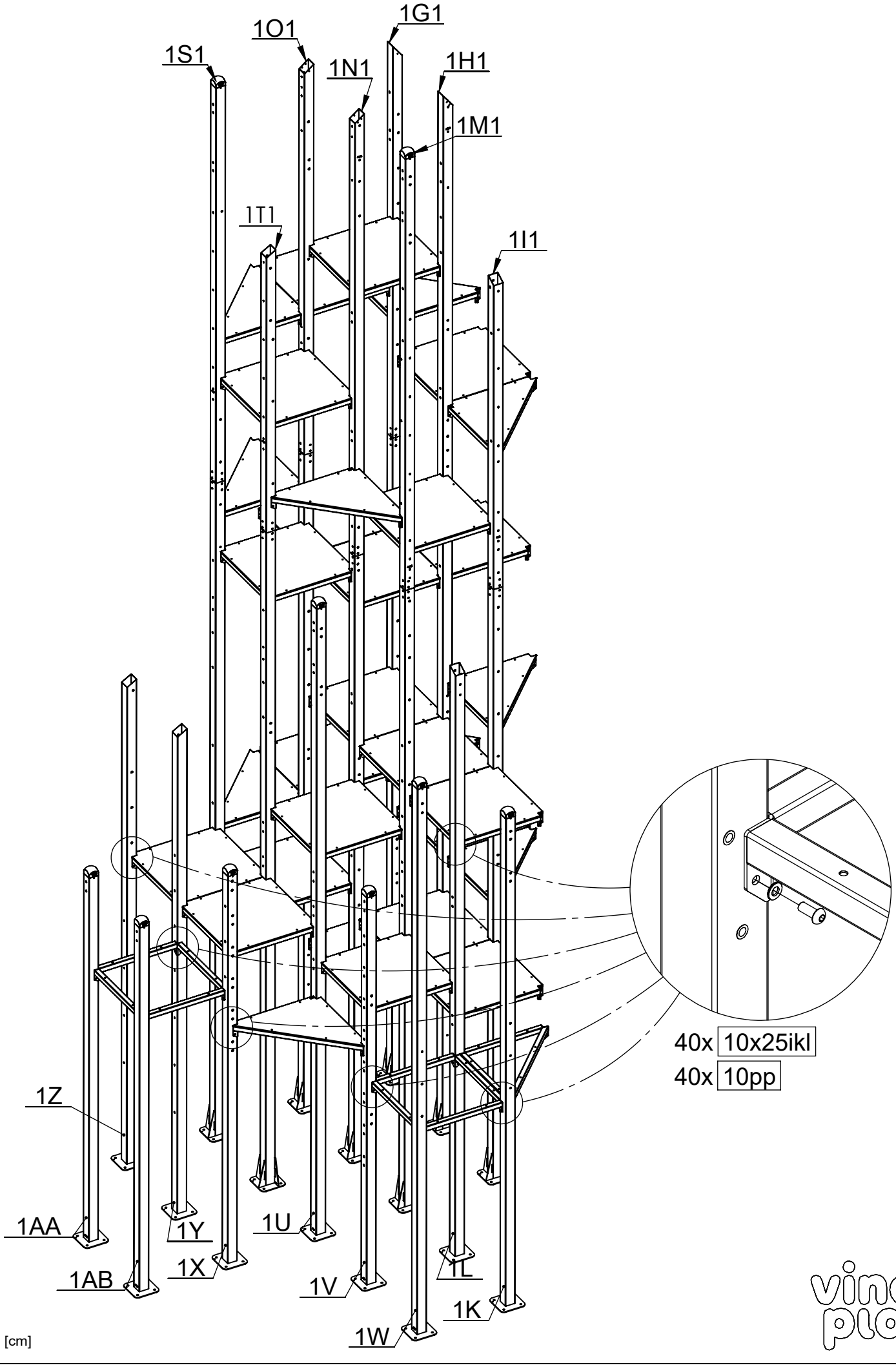
1G1
1O1
1S1
1N1
1H1
1M1
1T1
1I1
40x 10x25ikl
40x 10pp
1Z
1AA
1Y
1U
1AB
1X
1V
1L
1K
1W
[cm]
vinci play

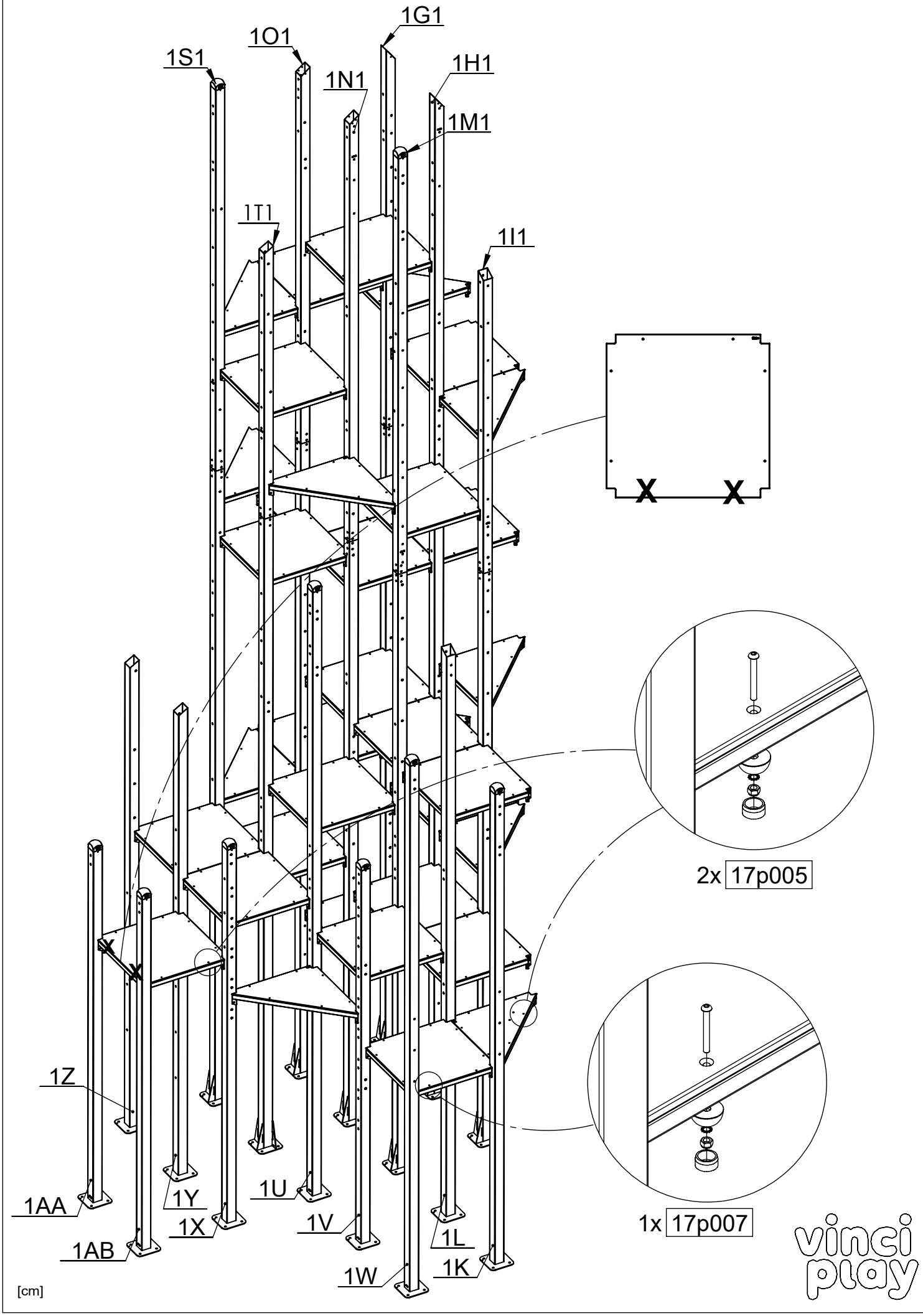
1G1
1O1
1S1
1H1
1N1
1M1
1T1
1I1
2x 17p005
1x 17p007
1Z
1AA
1AB
1Y
1X
1U
1V
1W
1L
1K
[cm]
vinci play

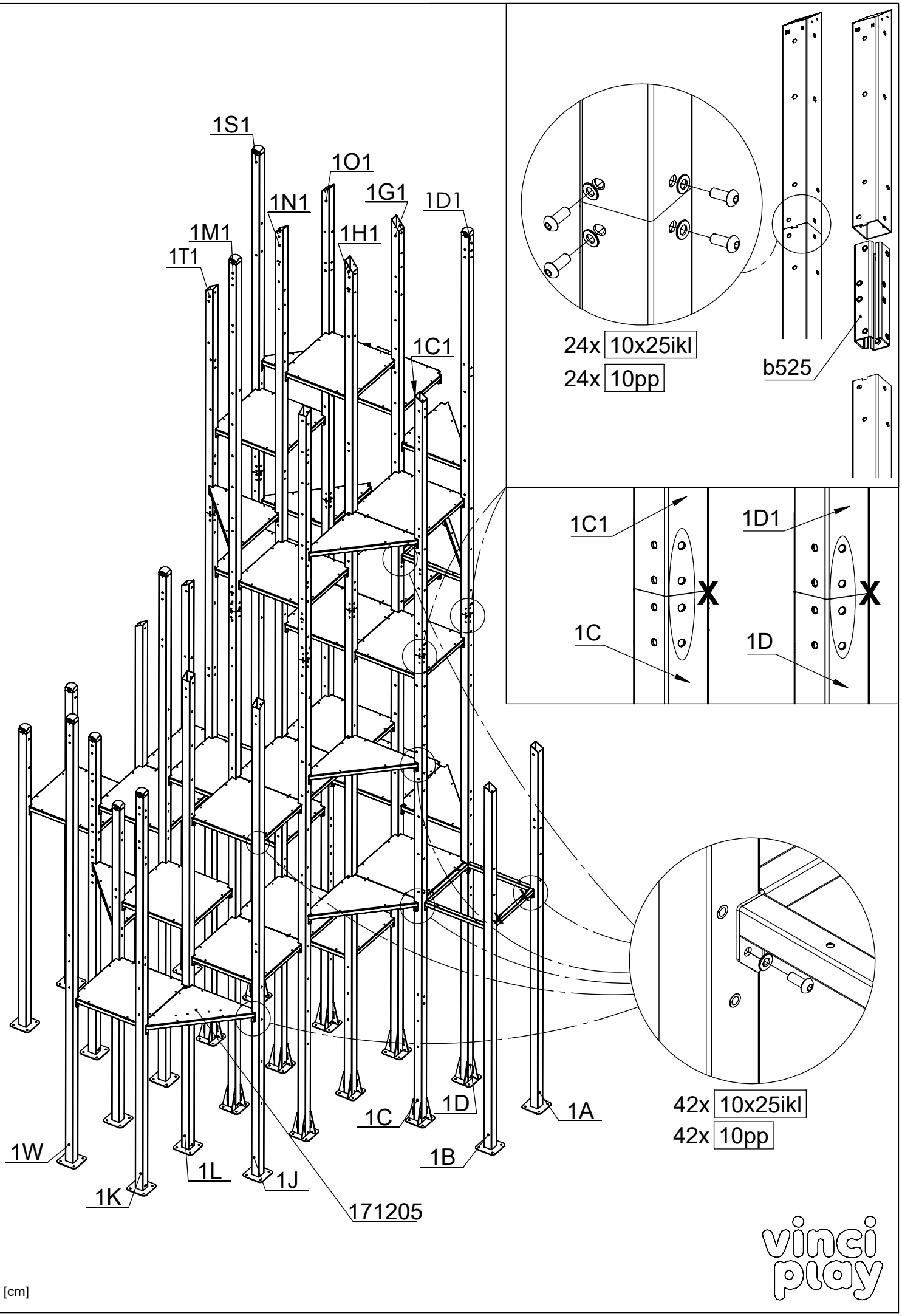
1S1
1O1
1N1
1G1
1D1
1M1
1H1
1T1
1C1
24x 10x25ikl
24x 10pp
b525
1C1
1D1
1C
1D
1W
1K
1L
1J
171205
1C
1D
1B
1A
42x 10x25ikl
42x 10pp
[cm]
vinci play

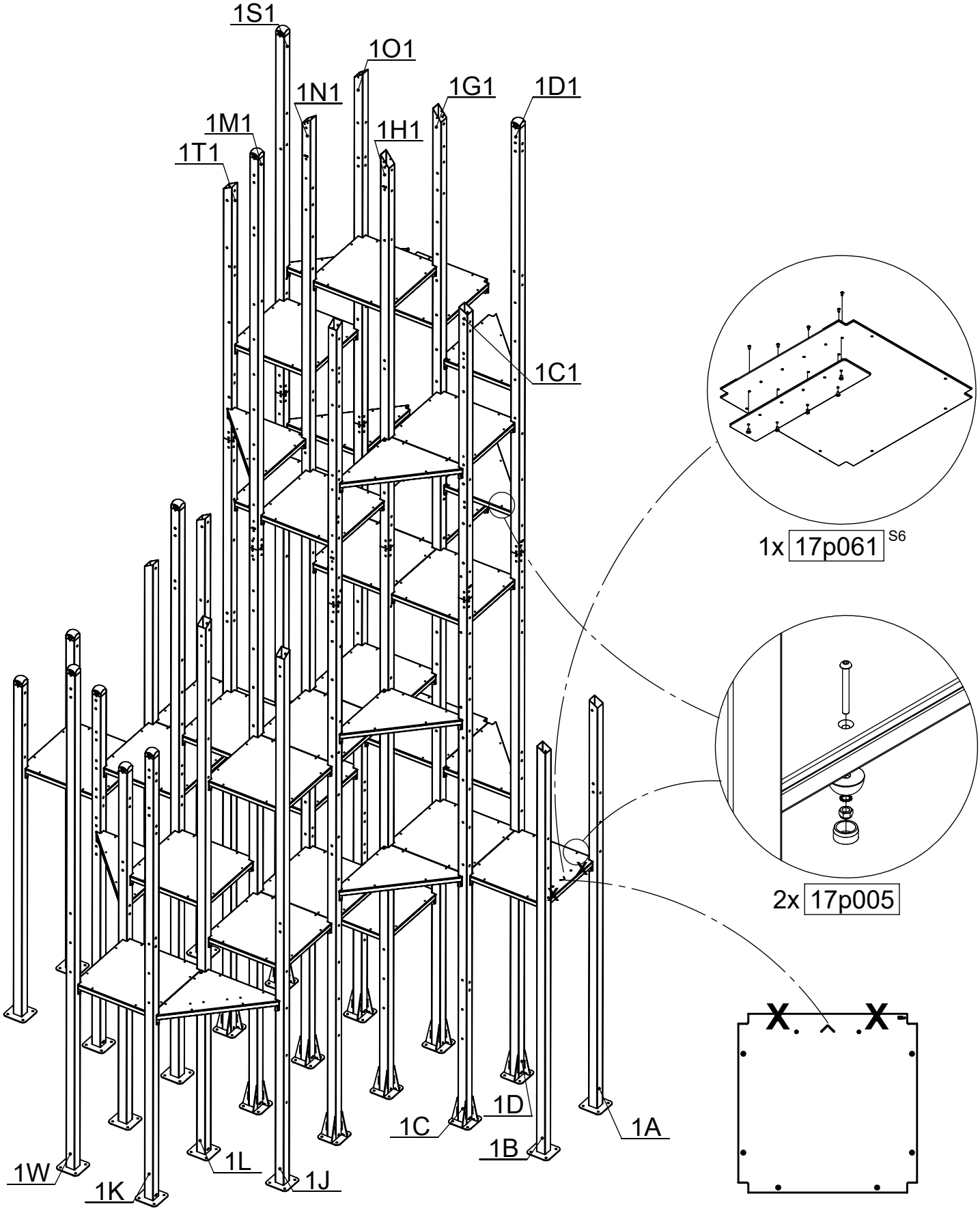

[cm]

vinci play

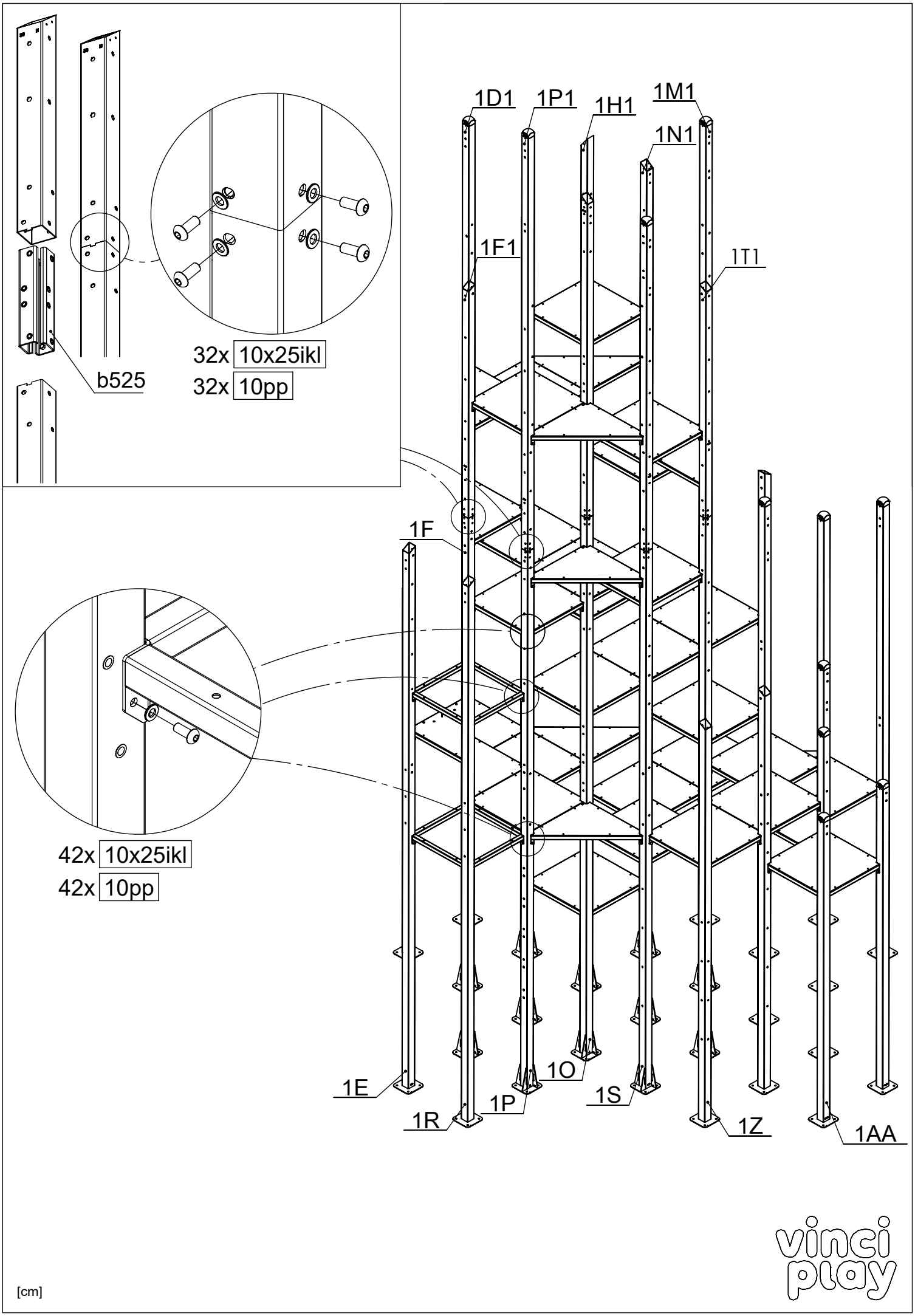
b525
32x 10x25ikl
32x 10pp
1D1
1P1
1H1
1M1
1N1
1F1
1T1
1F
42x 10x25ikl
42x 10pp
1E
1R
1P
1O
1S
1Z
1AA
[cm]
vinci play

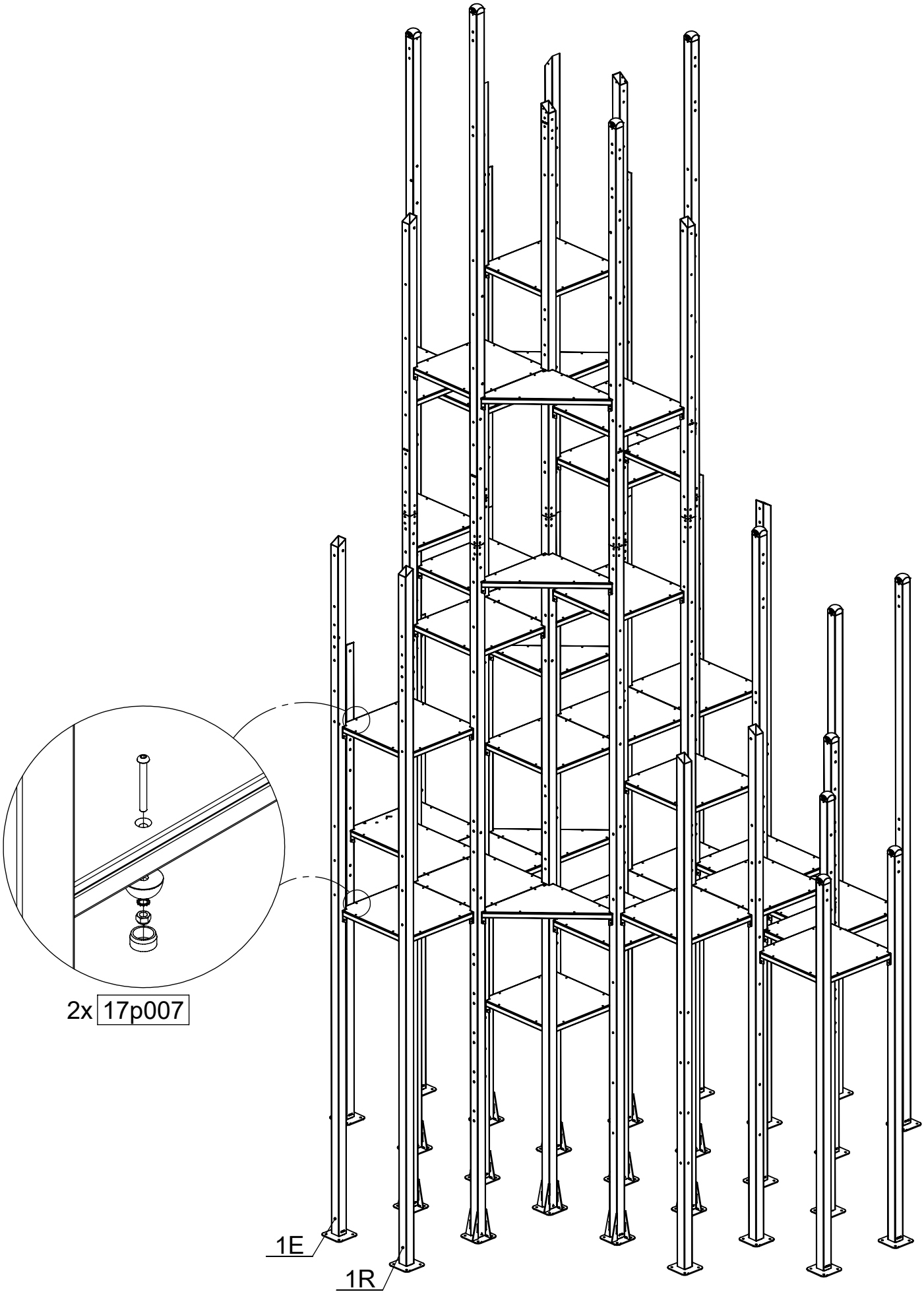

[cm]

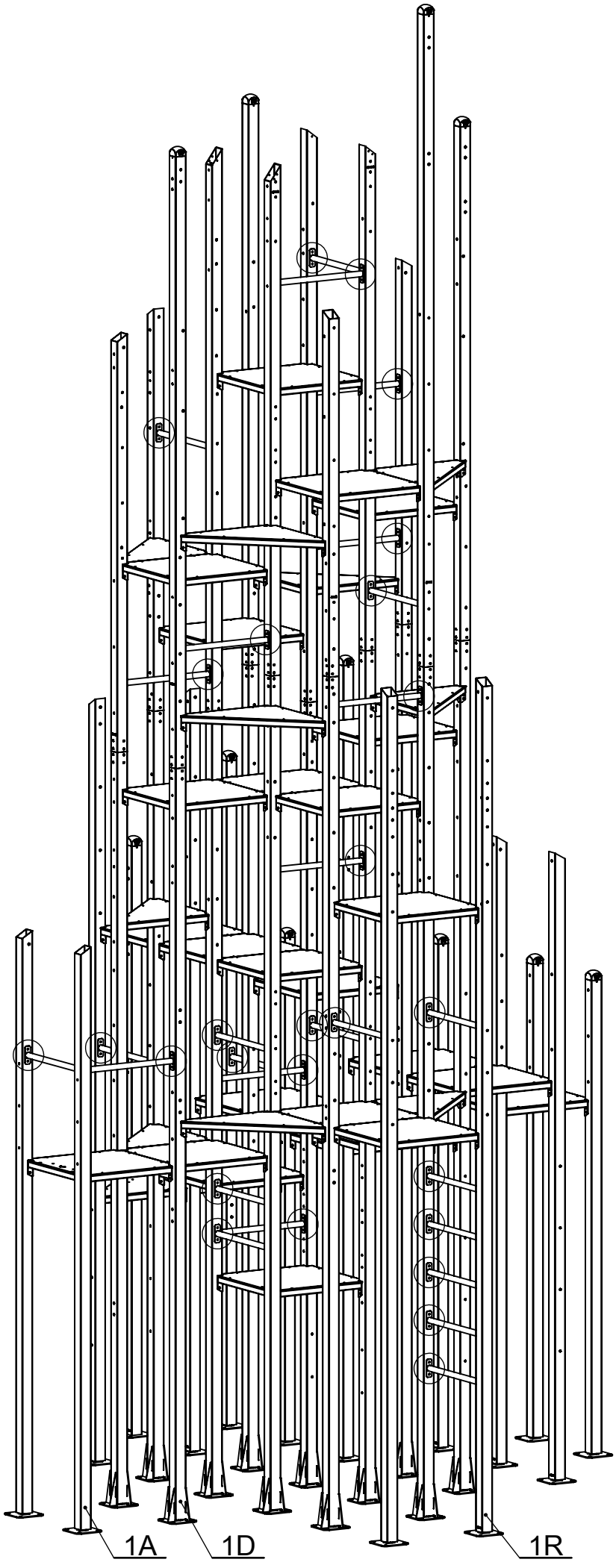

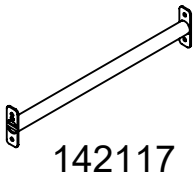

142117
x27

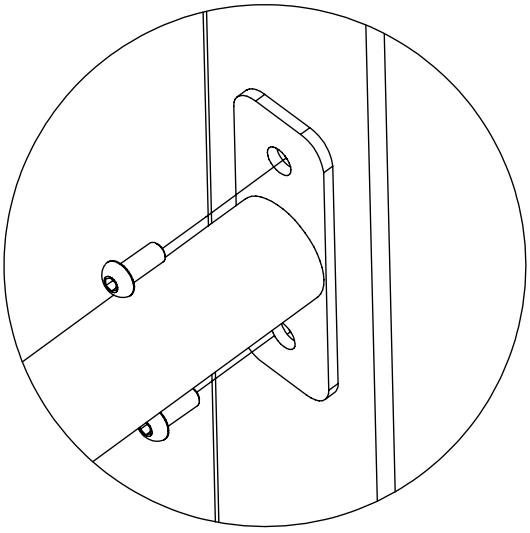

108x 10x25ikl

[cm]

vinci play

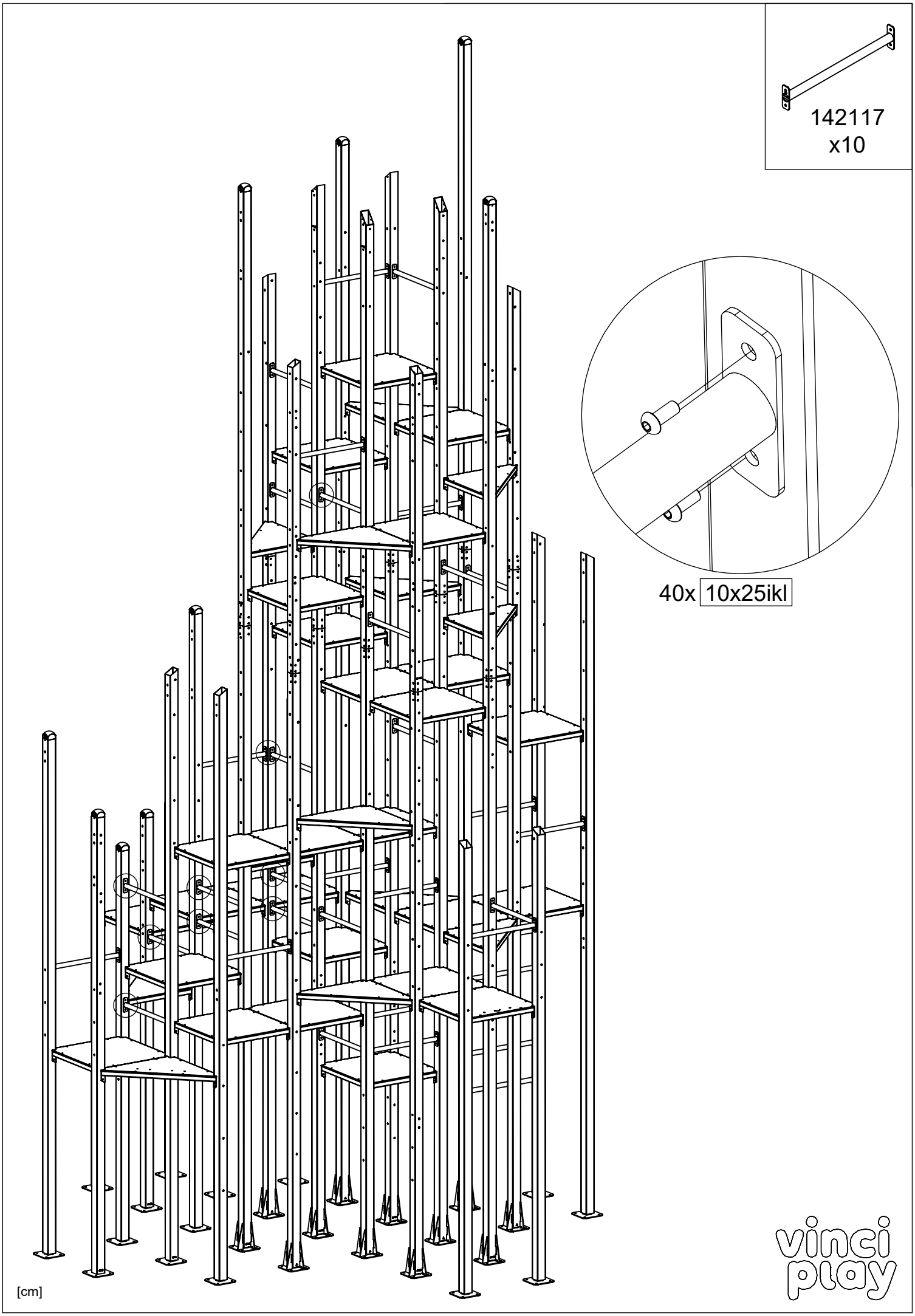
142117
x10
40x 10x25ikl
[cm]
vinci play

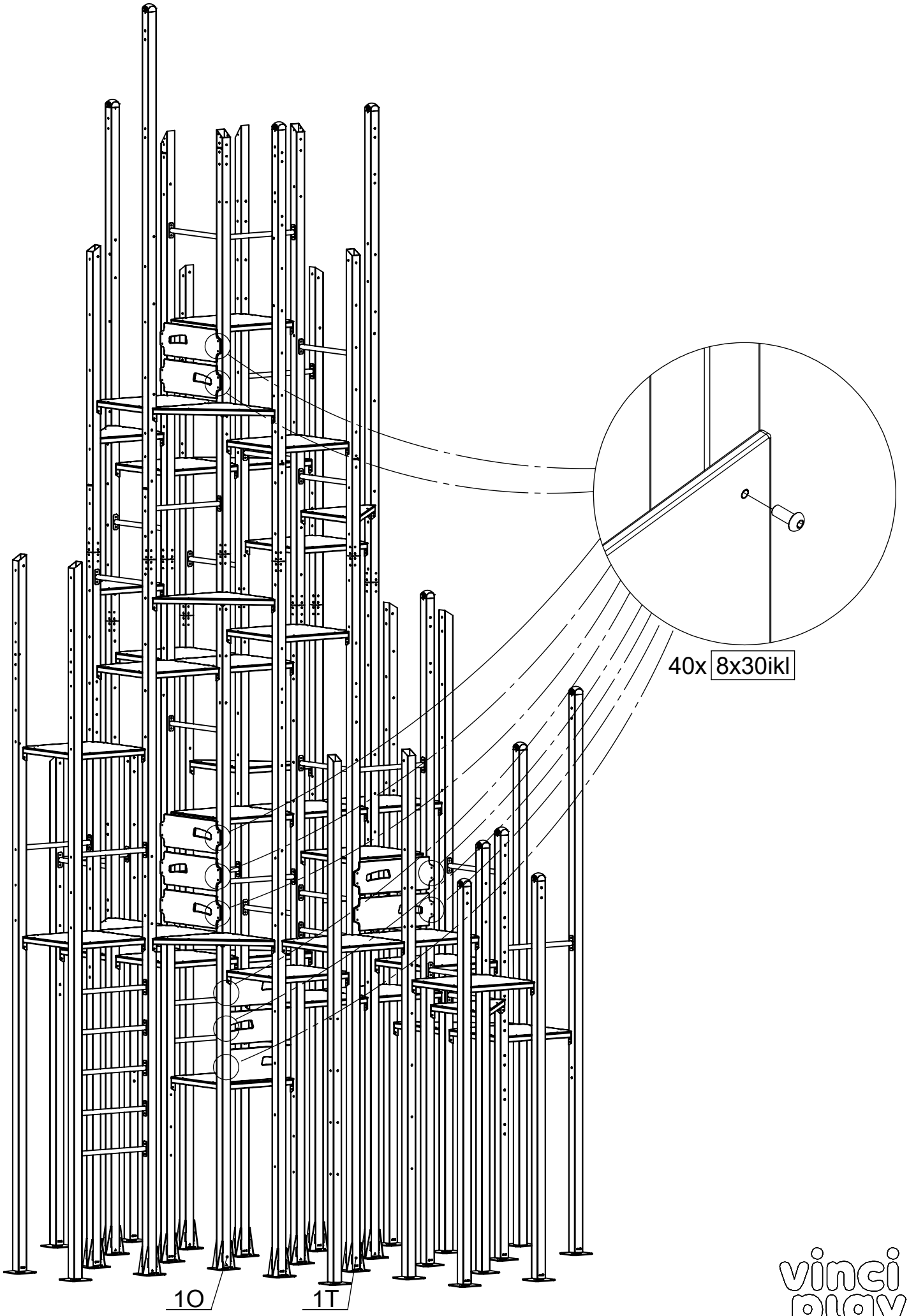

[cm]

vinci play

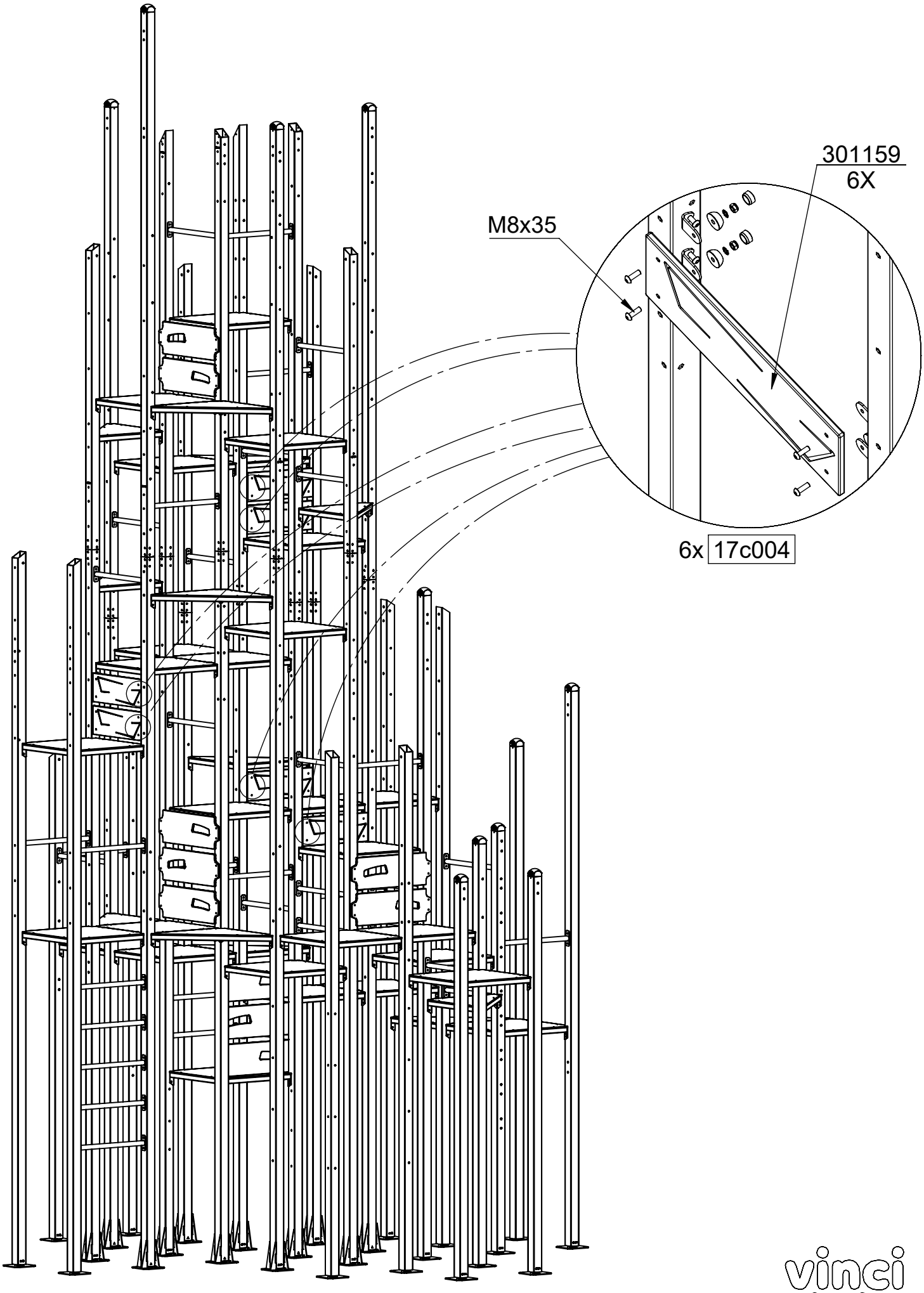

[cm]

vinci play

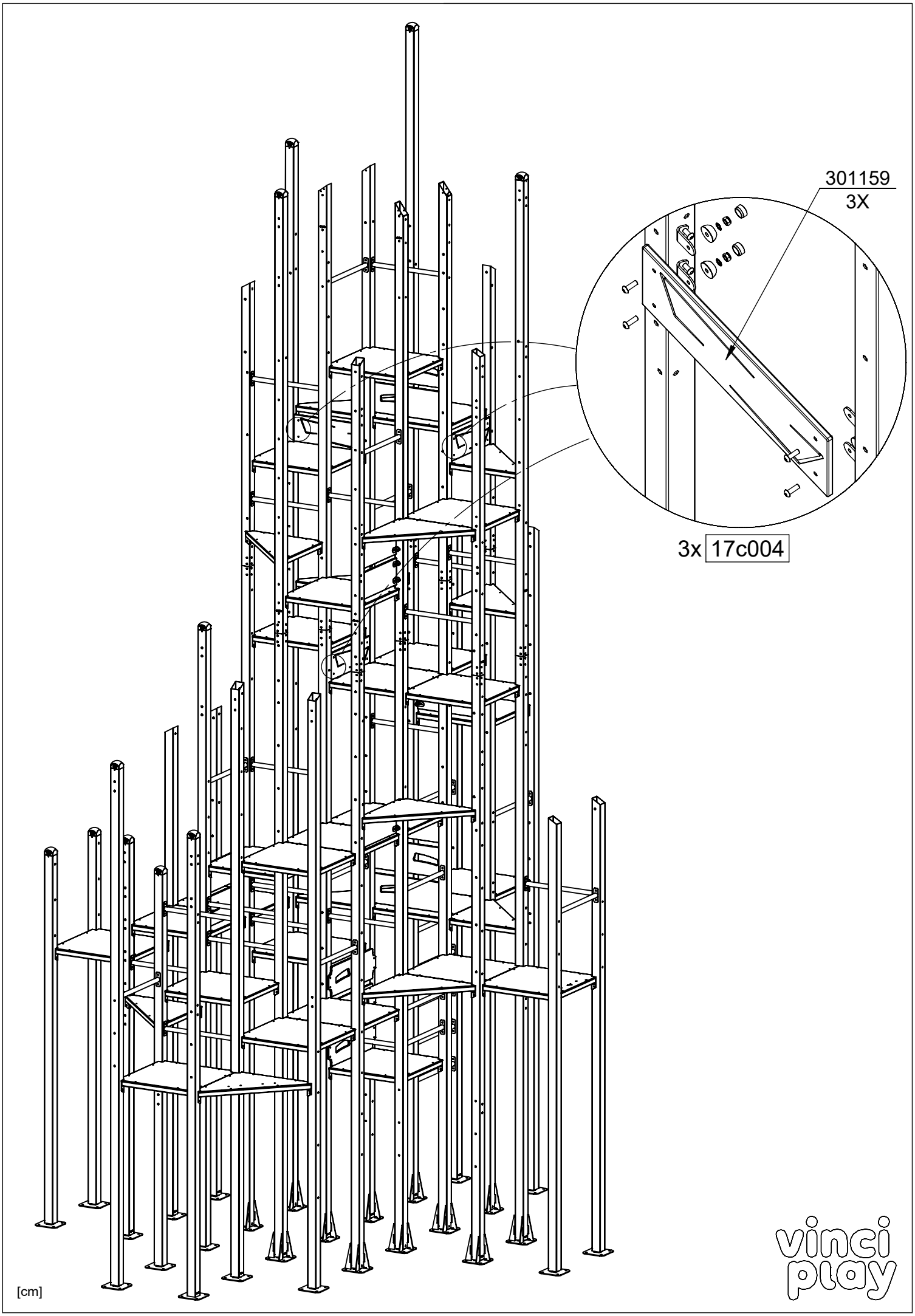
301159
3X
3x 17c004
[cm]
vinci play

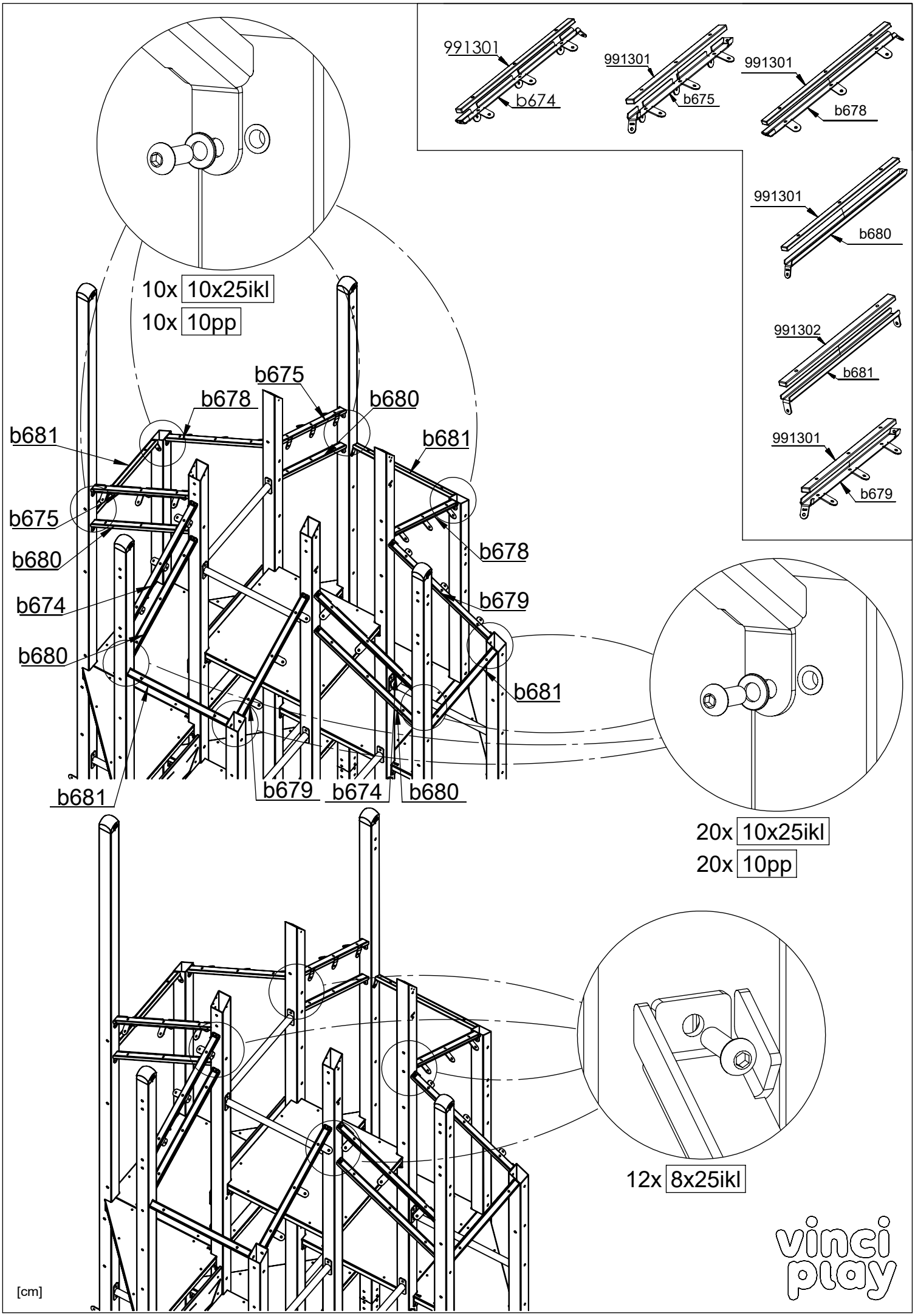
991301
b674
991301
b675
991301
b678
991301
b680
991302
b681
991301
b679
10x 10x25ikl
10x 10pp
b675
b678
b680
b681
b681
b675
b680
b674
b680
b678
b679
b681
b681
b679
b674
b680
20x 10x25ikl
20x 10pp
12x 8x25ikl
[cm]
vinci play

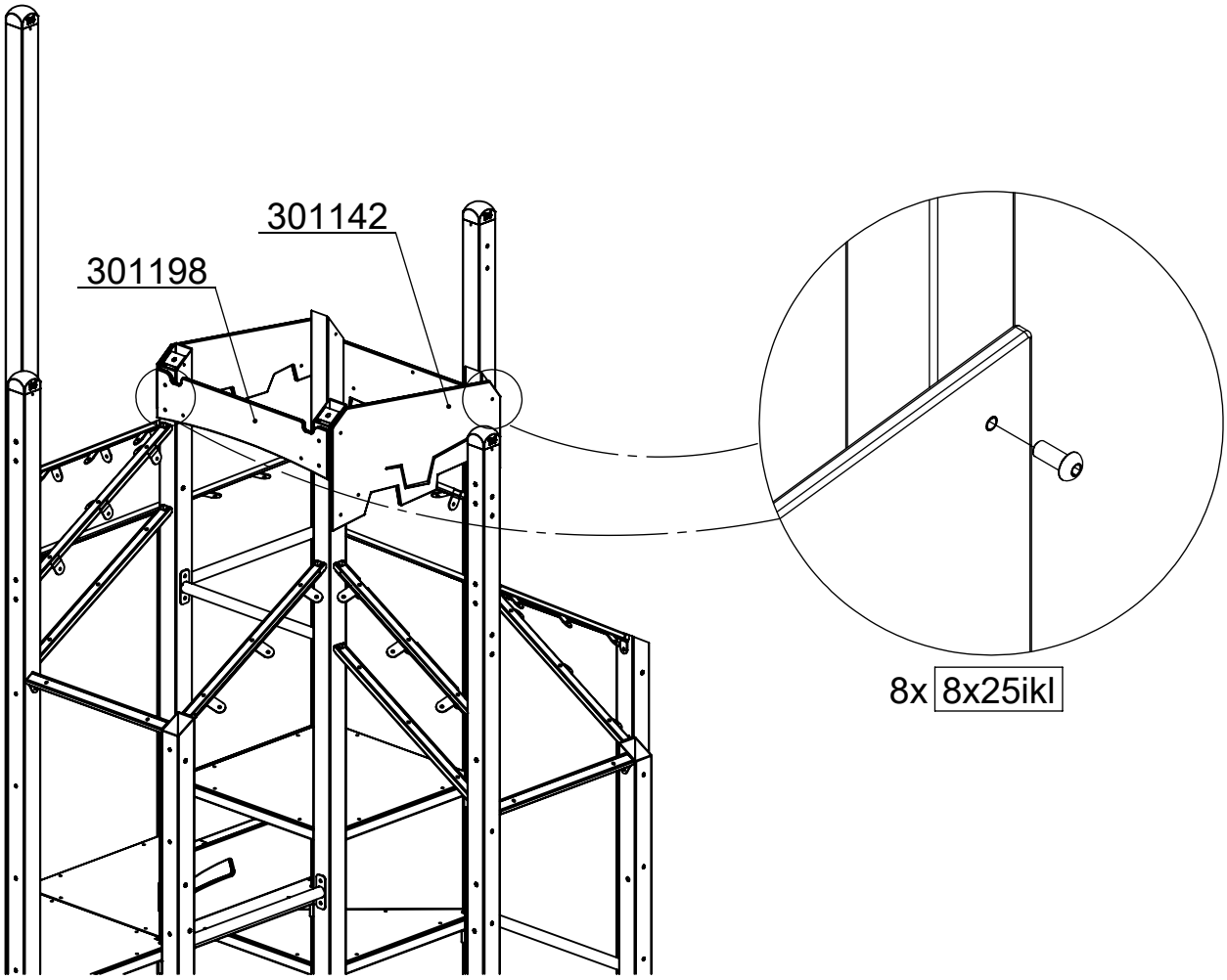

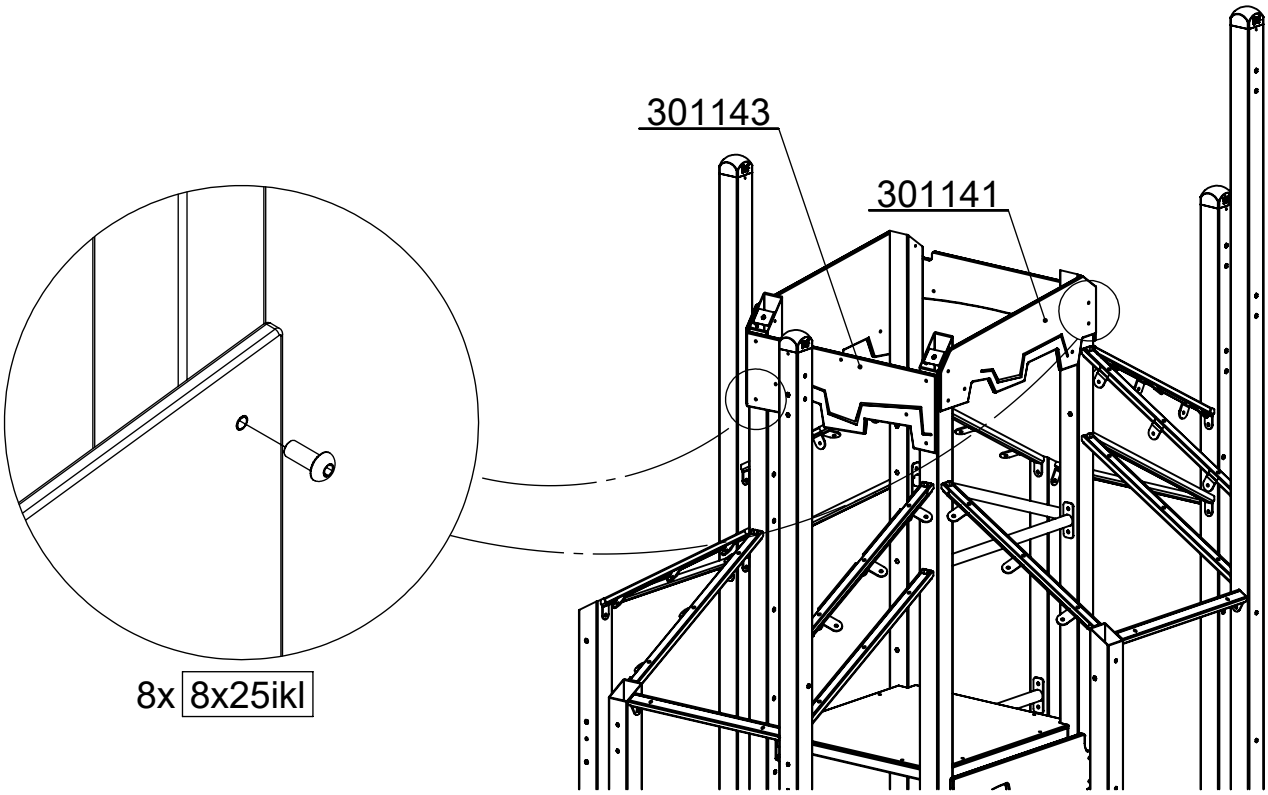

[cm]

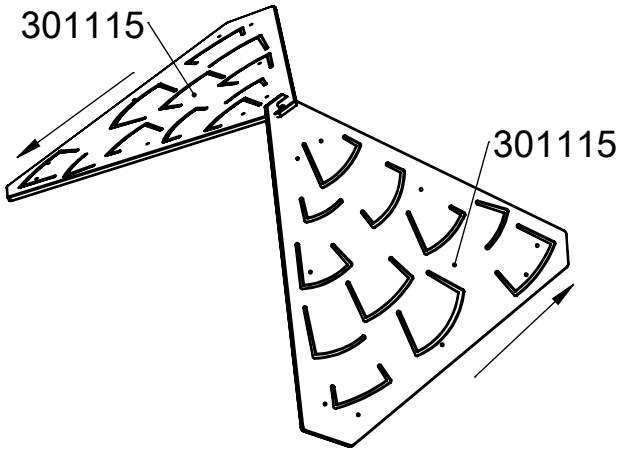

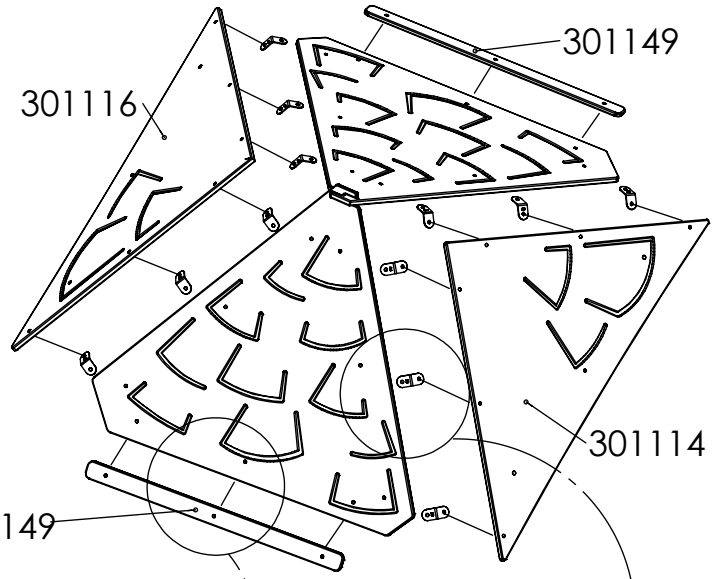

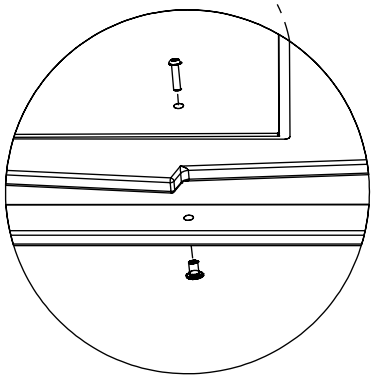

2x 30c152

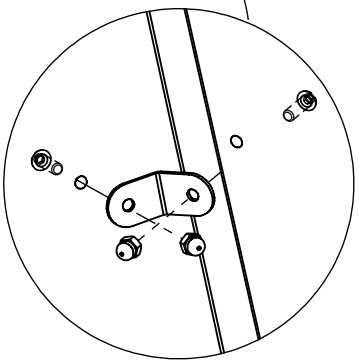

1x 30c058

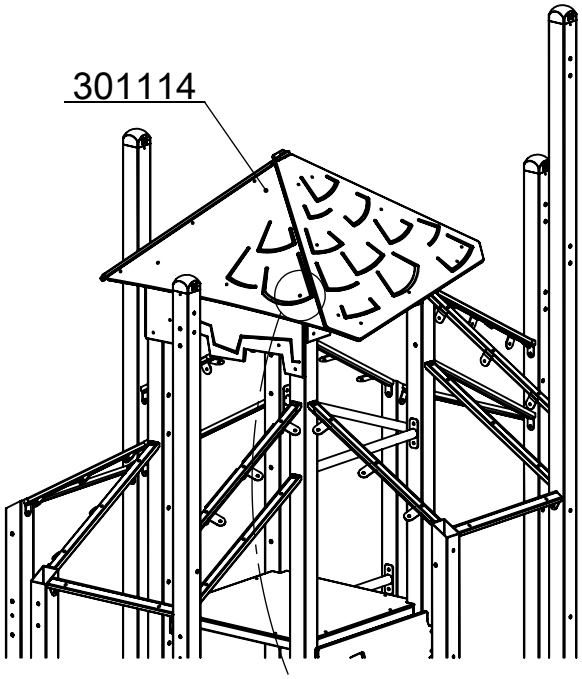

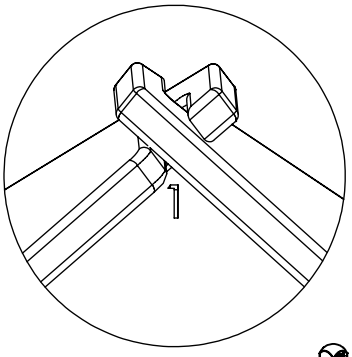

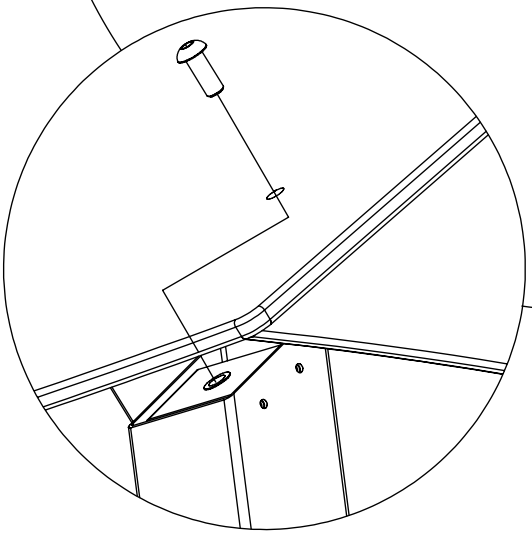

4x 10x30ikl

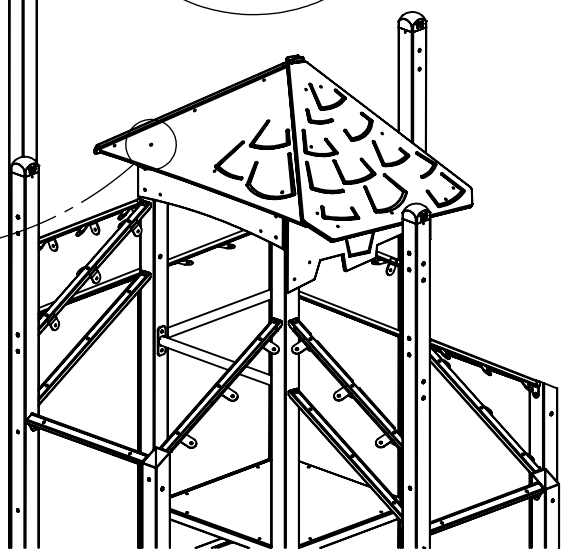

[cm]

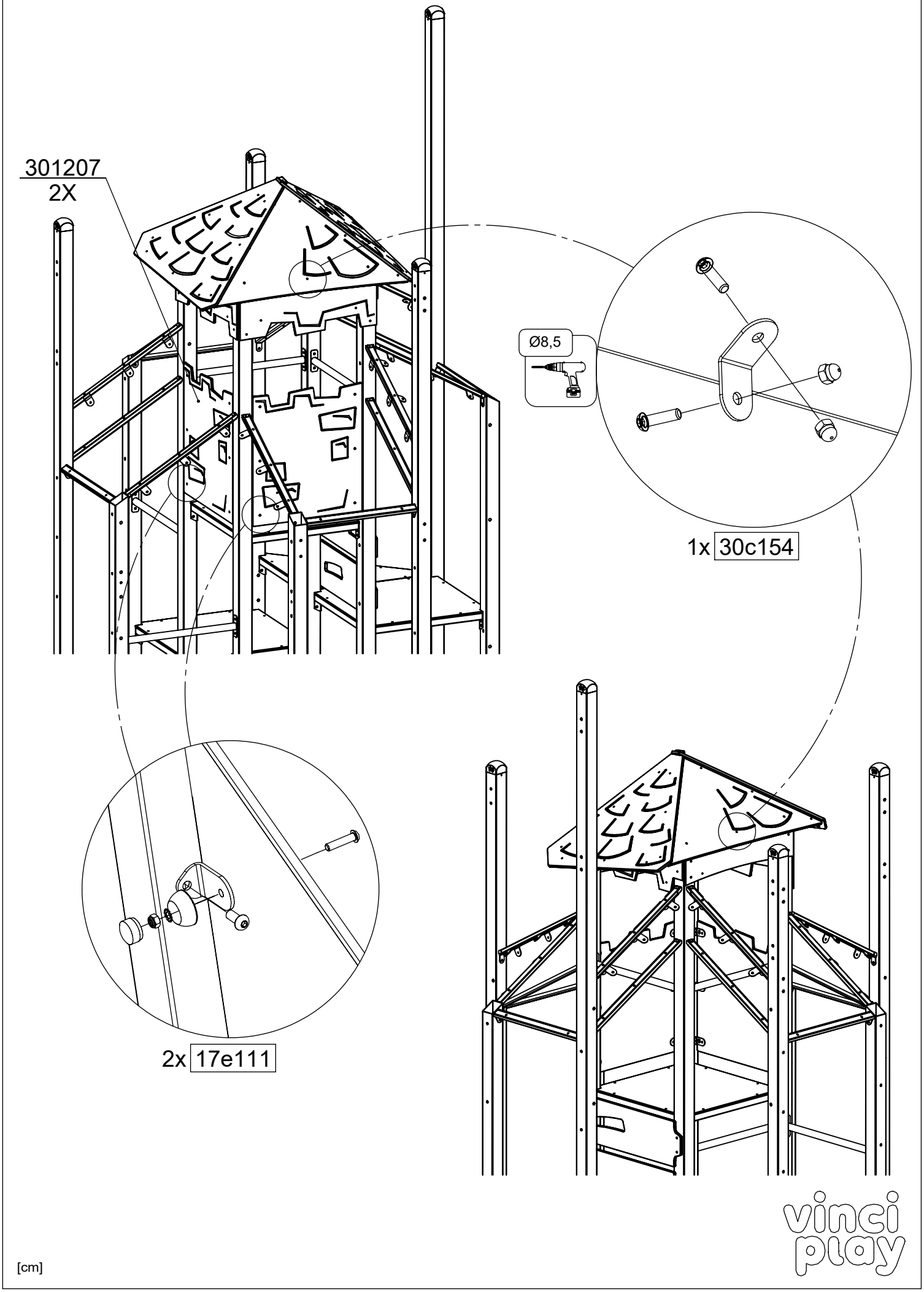
301207
2X
Ø8,5
1x 30c154
2x 17e111
[cm]
vinci play

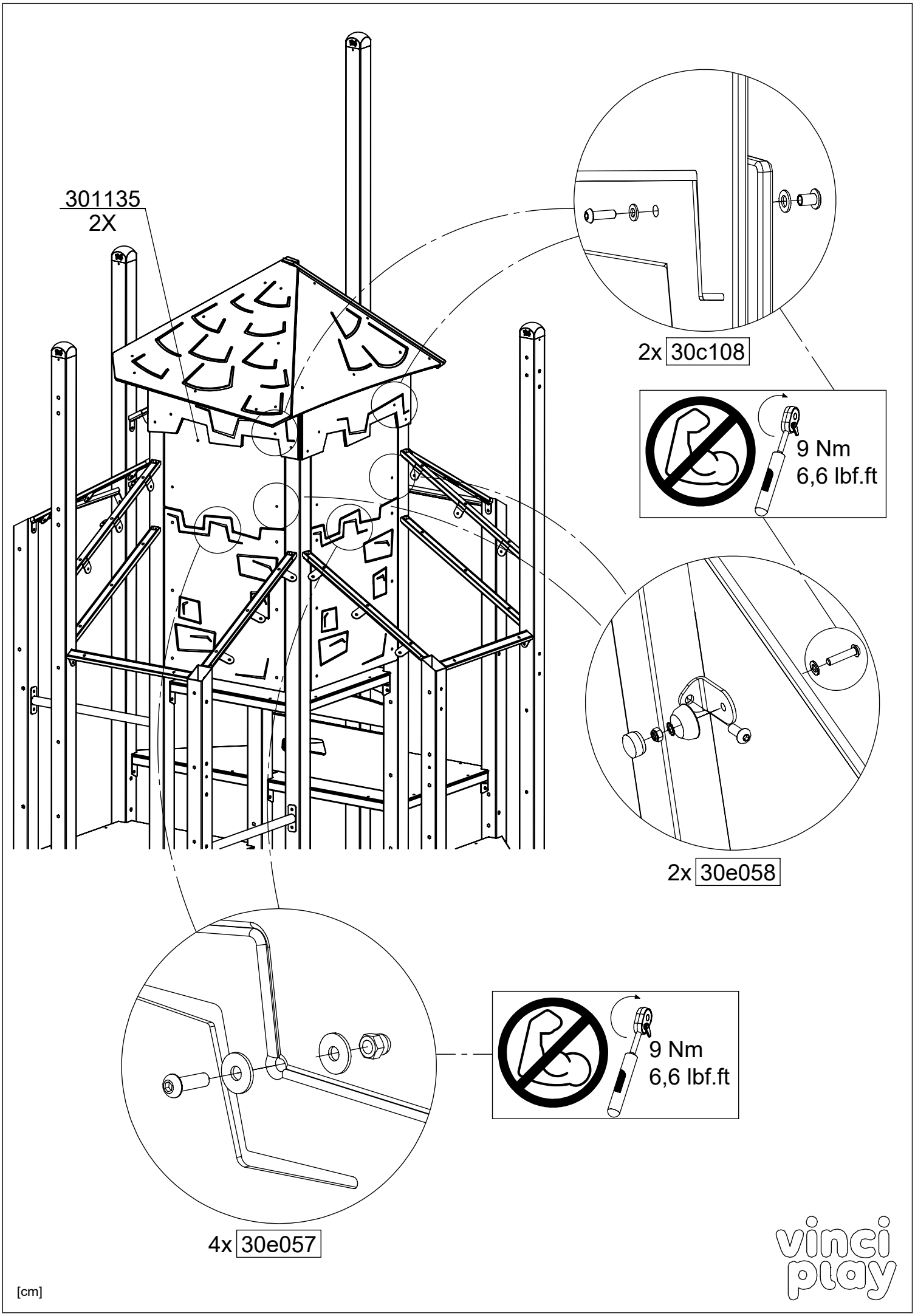
301135
2X
2x 30c108
9 Nm
6,6 lbf.ft
2x 30e058
9 Nm
6,6 lbf.ft
4x 30e057
[cm]
vinci play

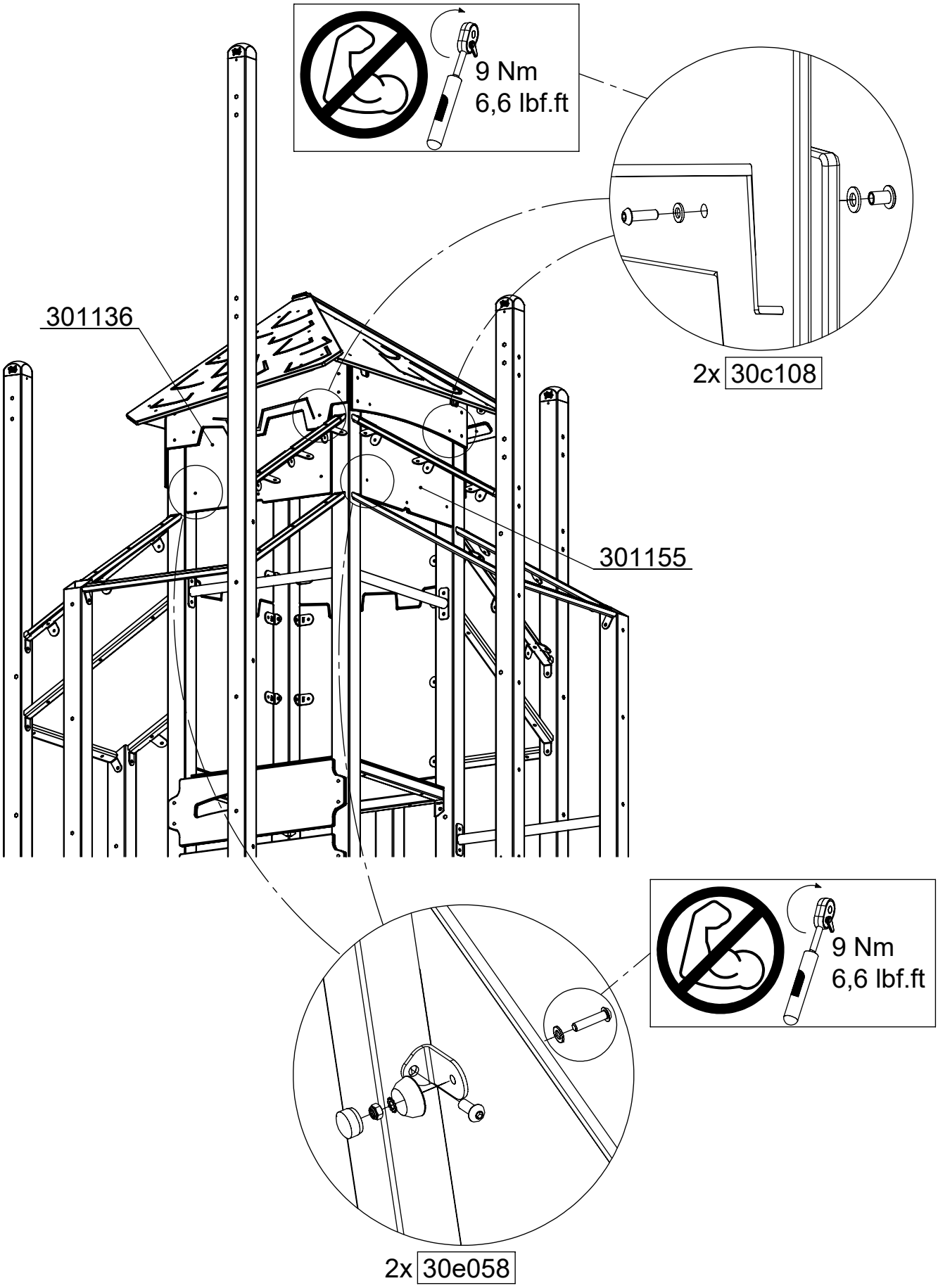

[cm]

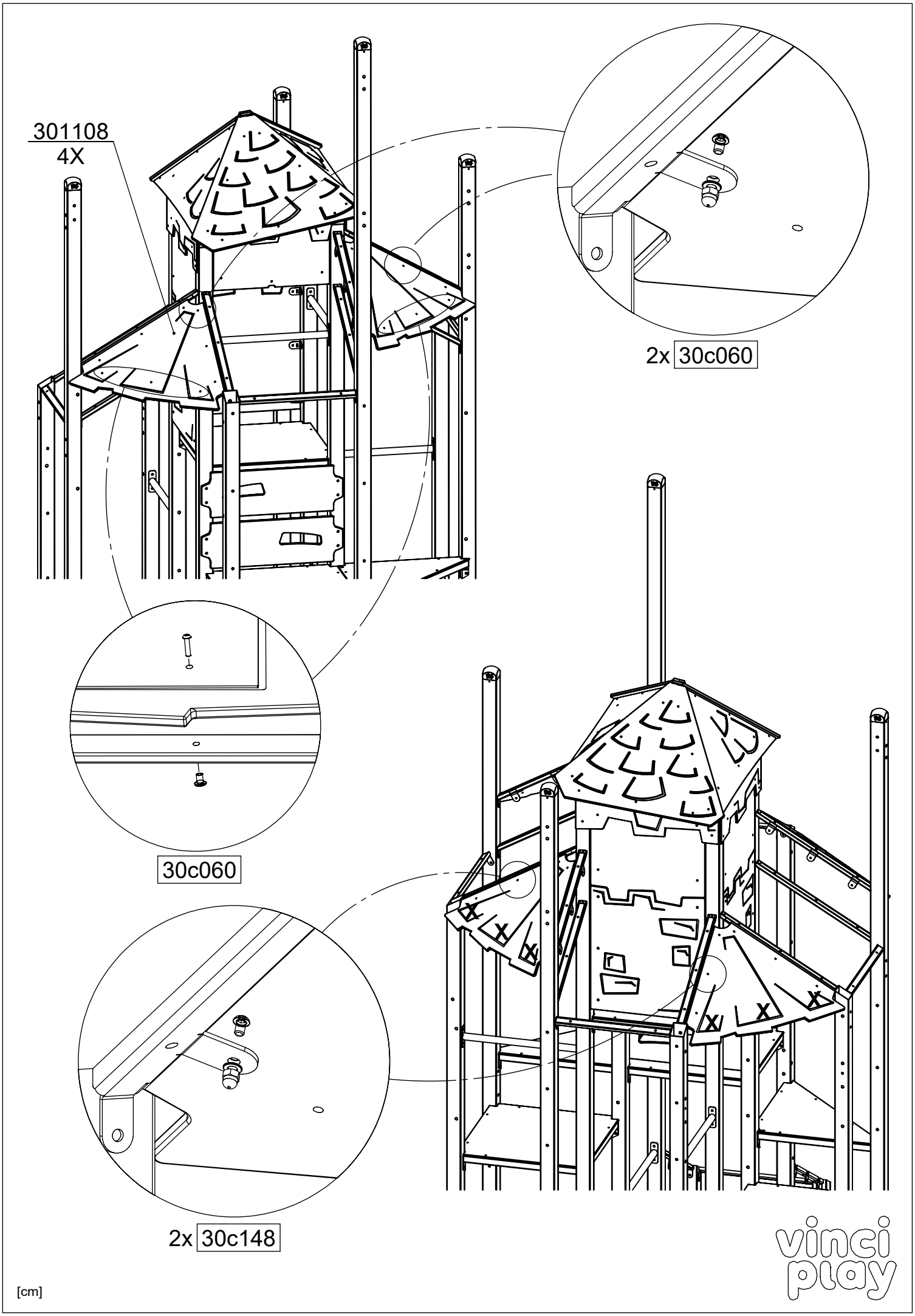
301108
4X
2x 30c060
30c060
2x 30c148
[cm]
vinci play

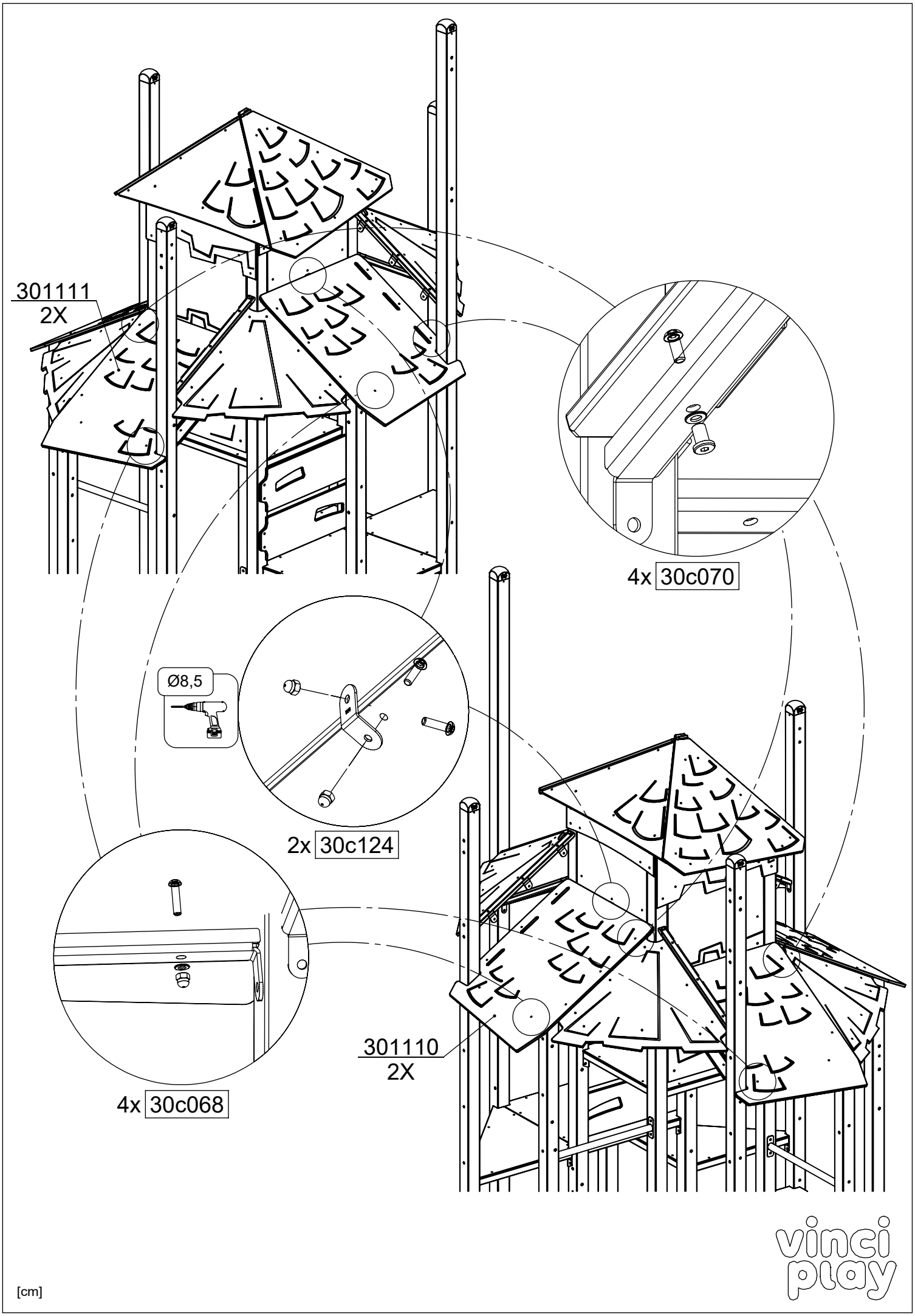
301111
2X
4x 30c070
Ø8,5
2x 30c124
4x 30c068
301110
2X
vinci play
[cm]

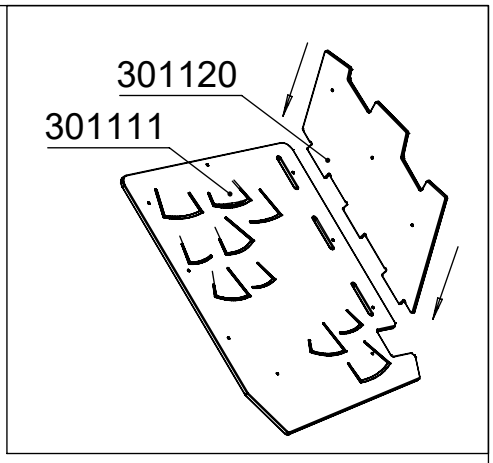

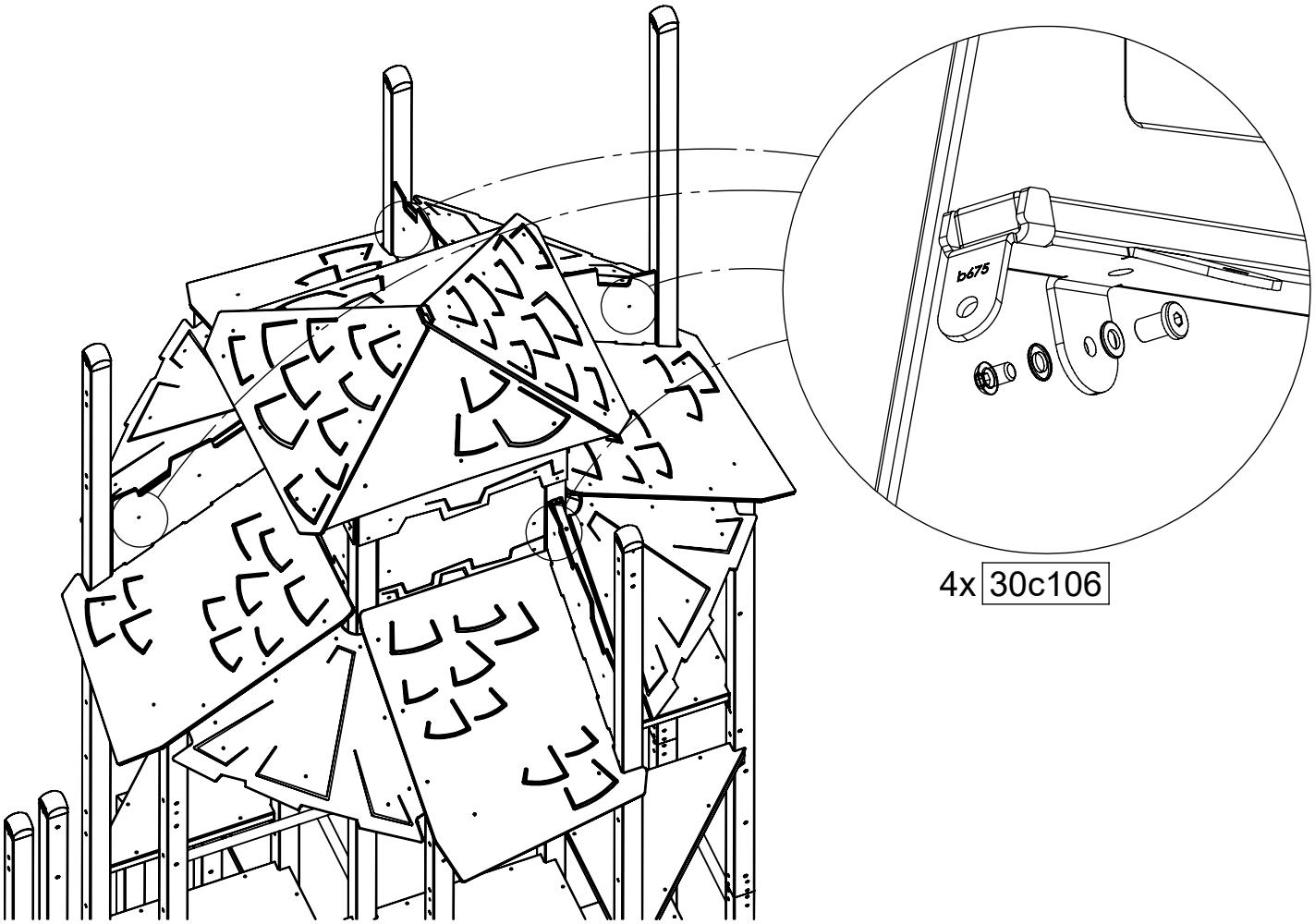

[cm]

vinci play

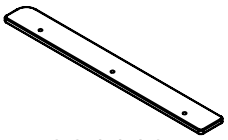

301119
x4

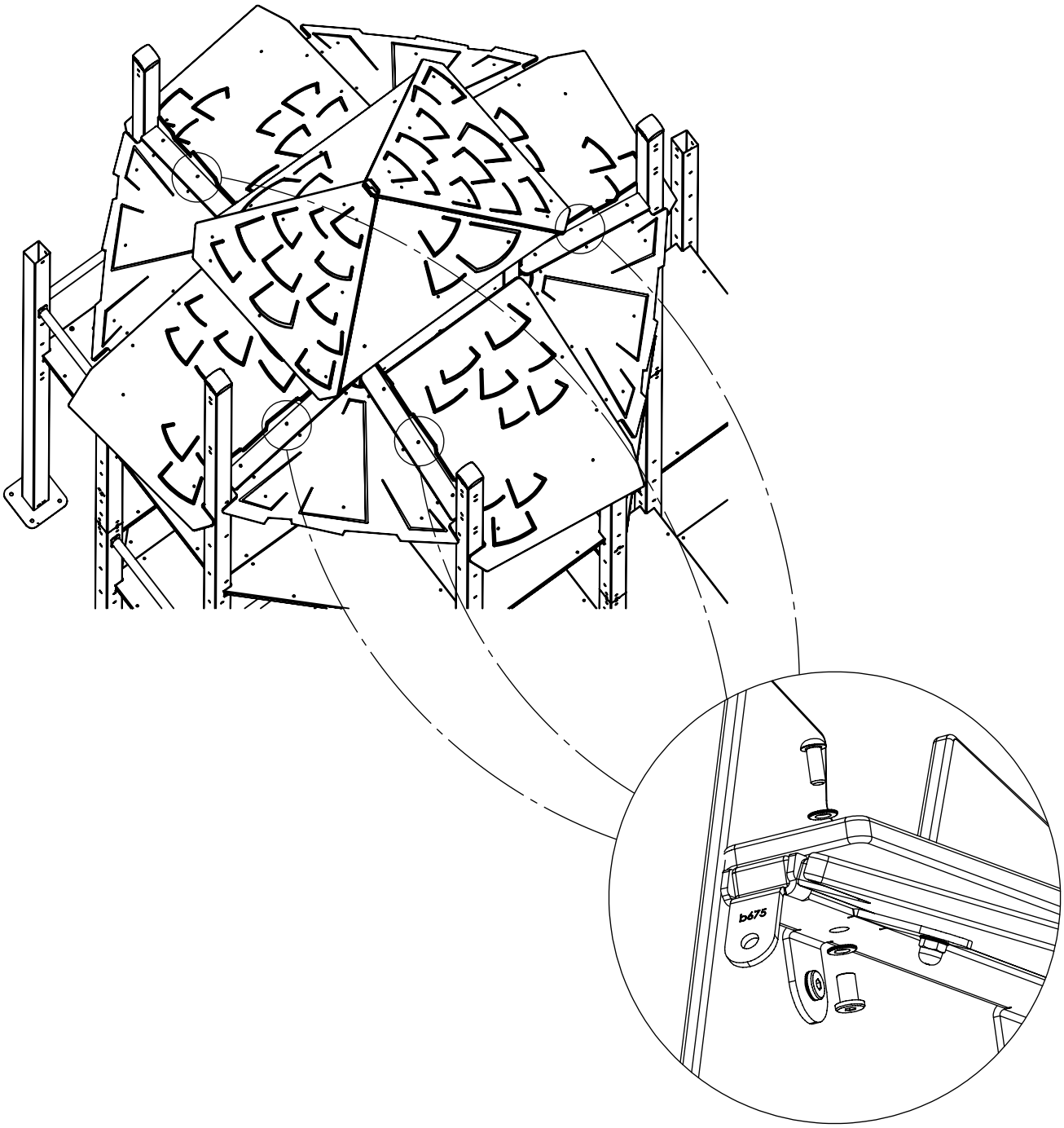

4x 30c110

[cm]

x3

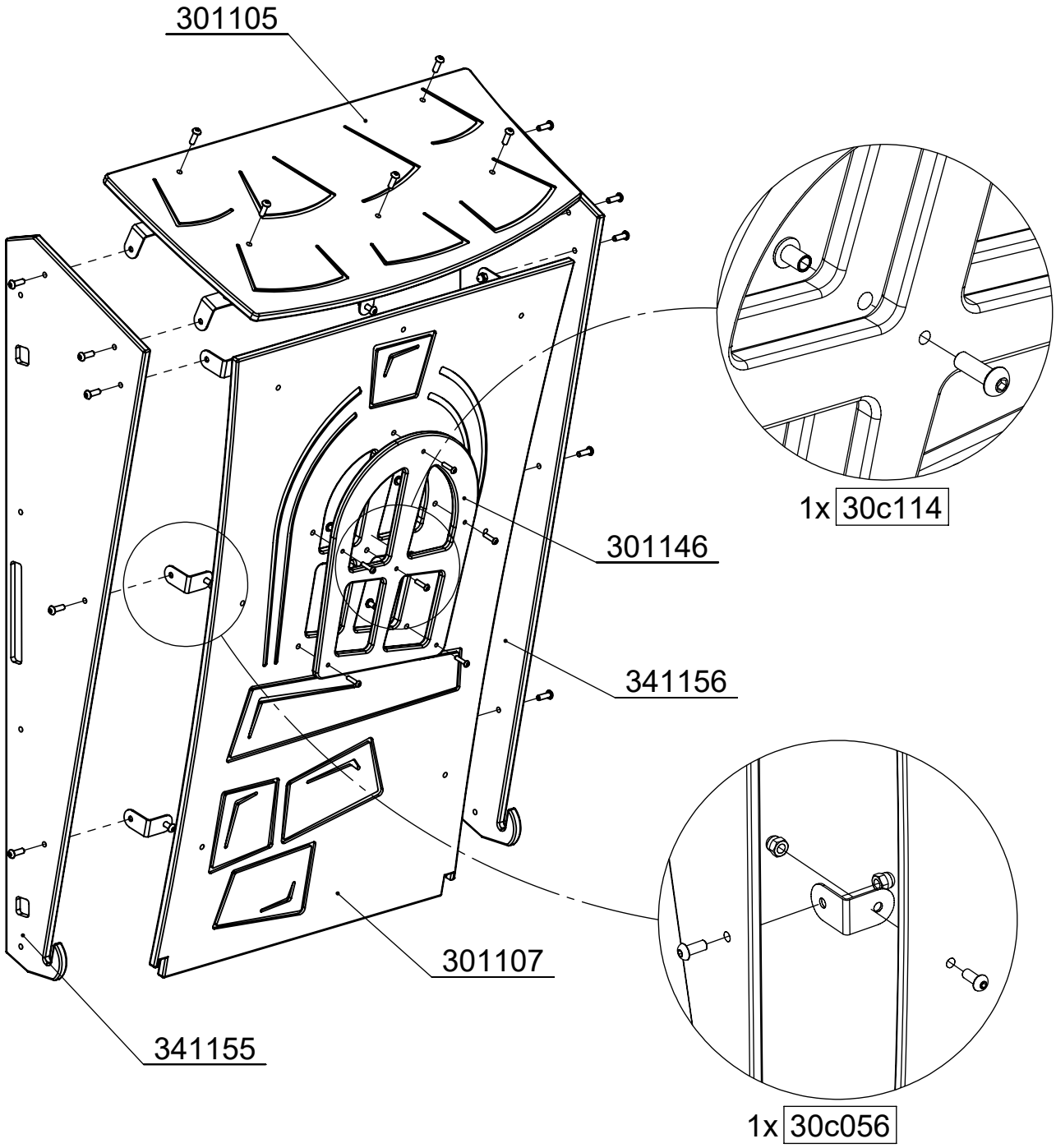

[cm]

vinci play

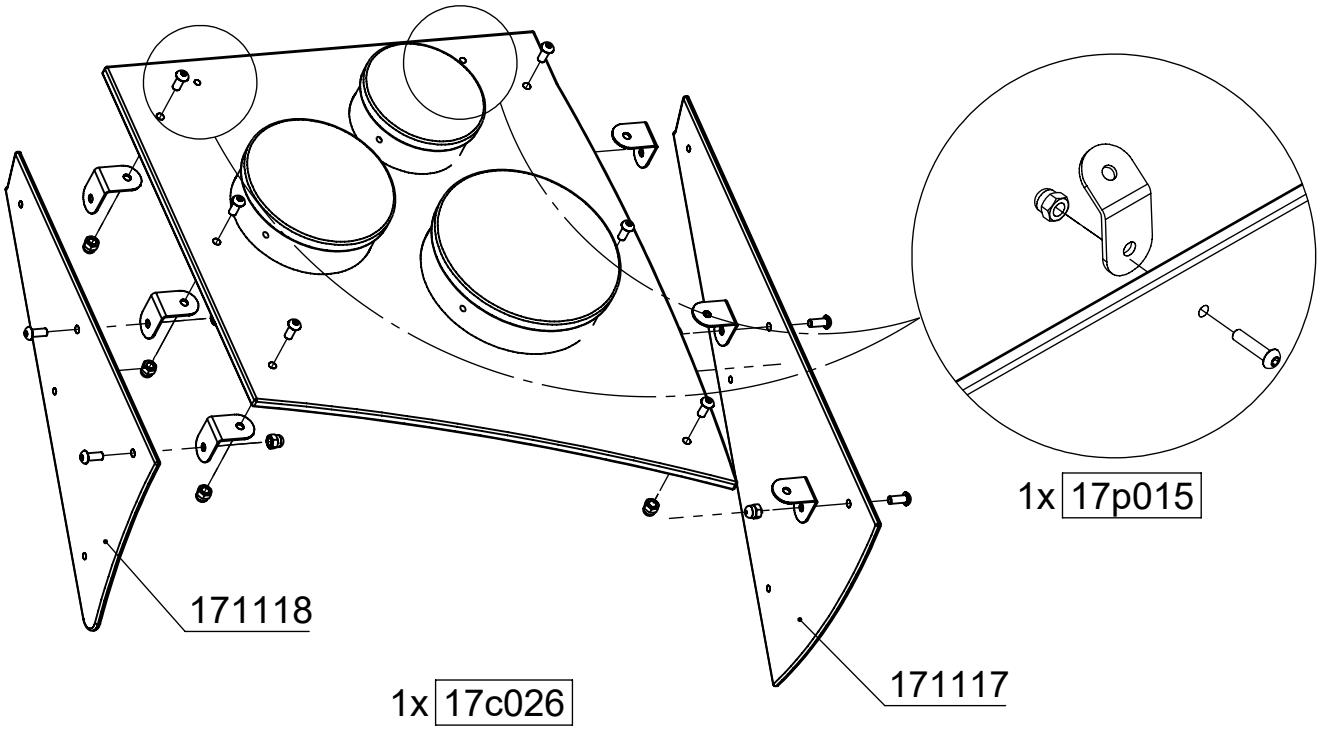
171118
1x 17c026
171117
1x 17p015

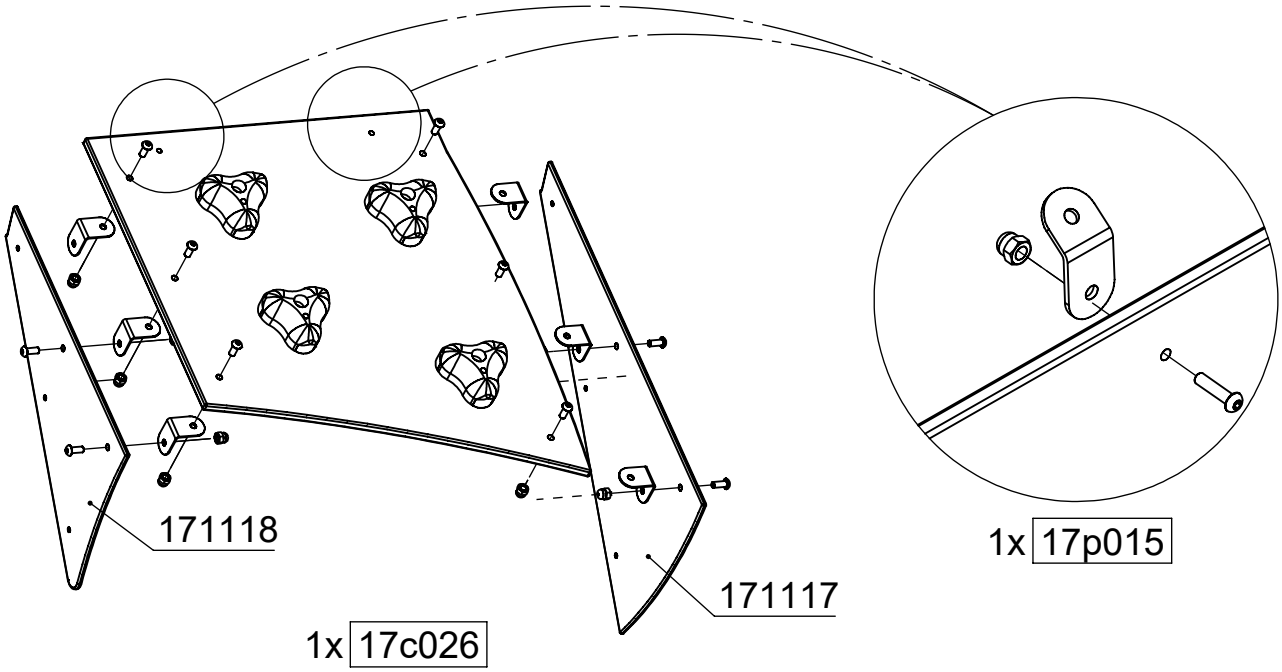
171118
1x 17c026
171117
1x 17p015

[cm]

x3

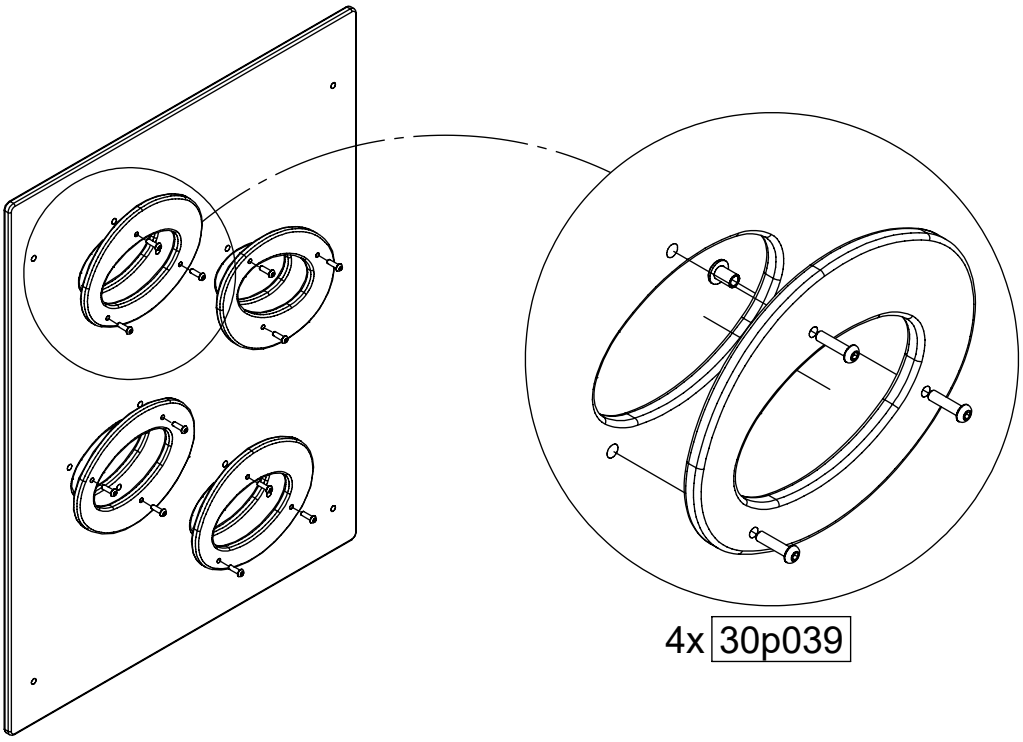

x3

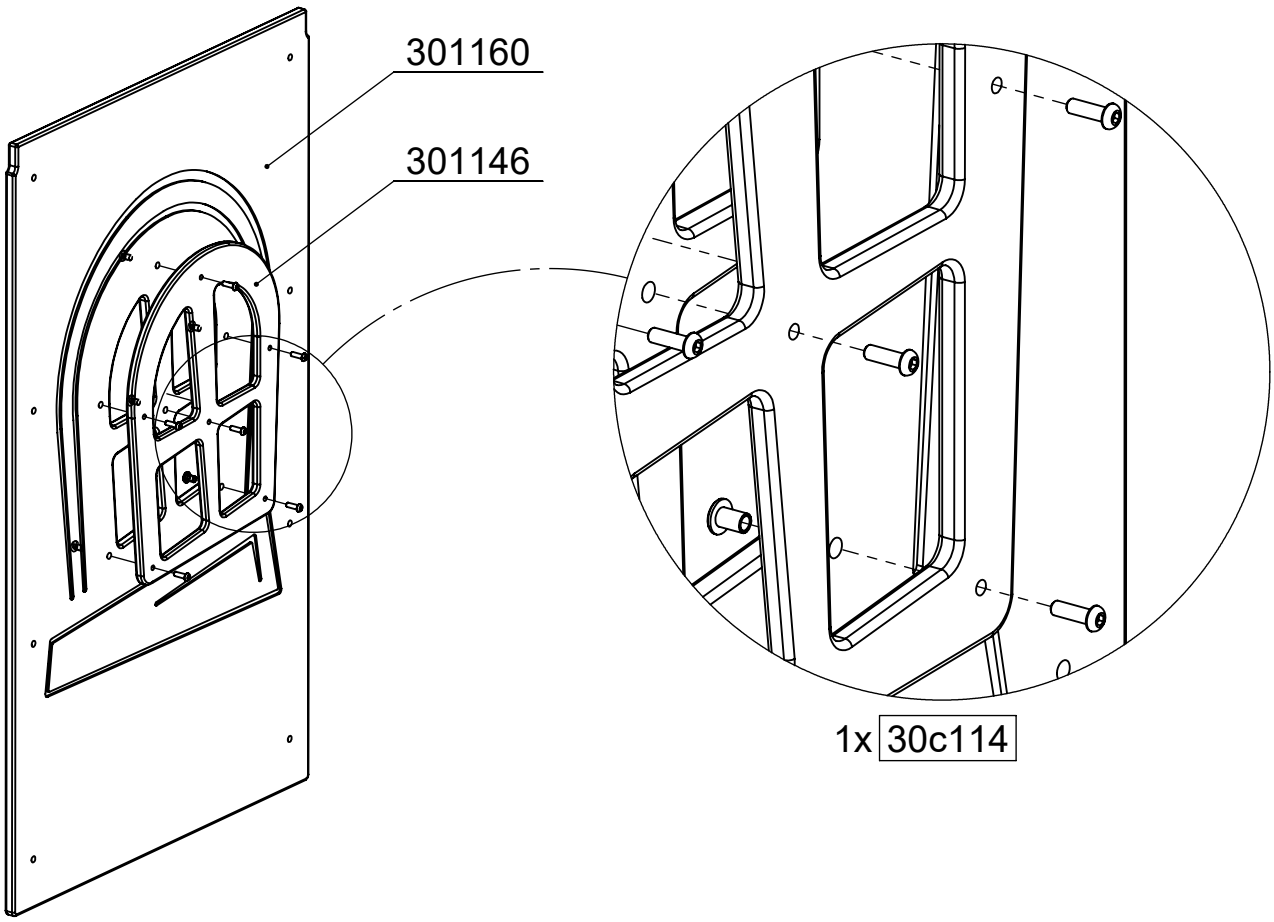

[cm]

x3

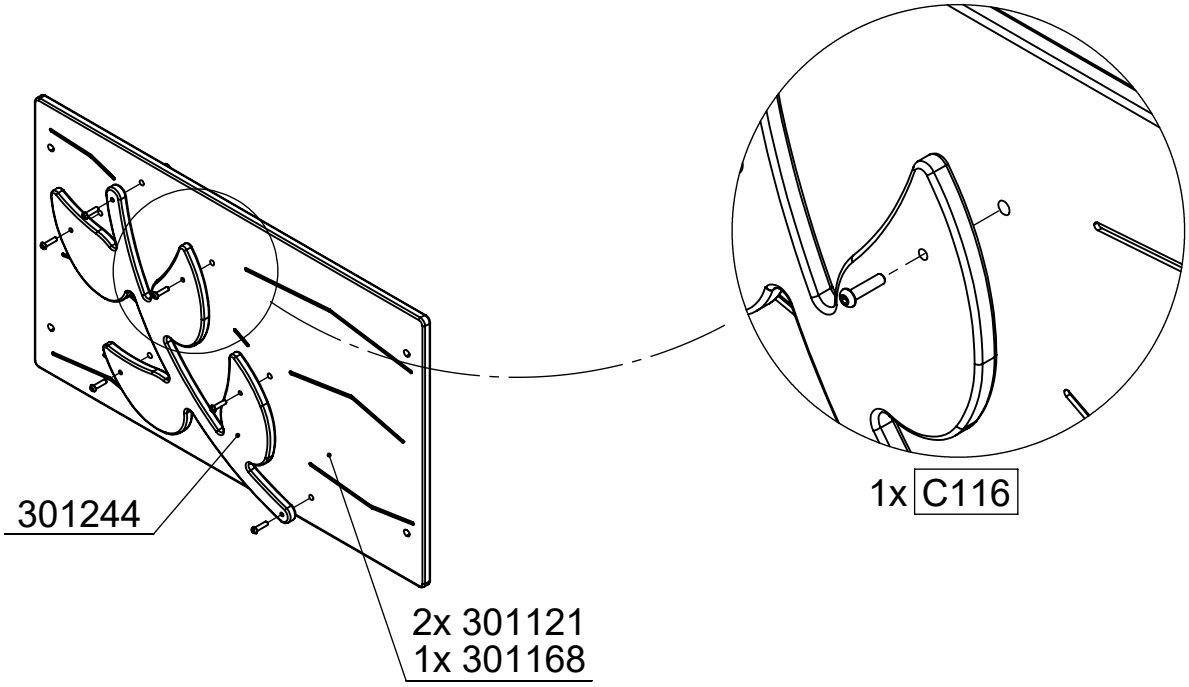

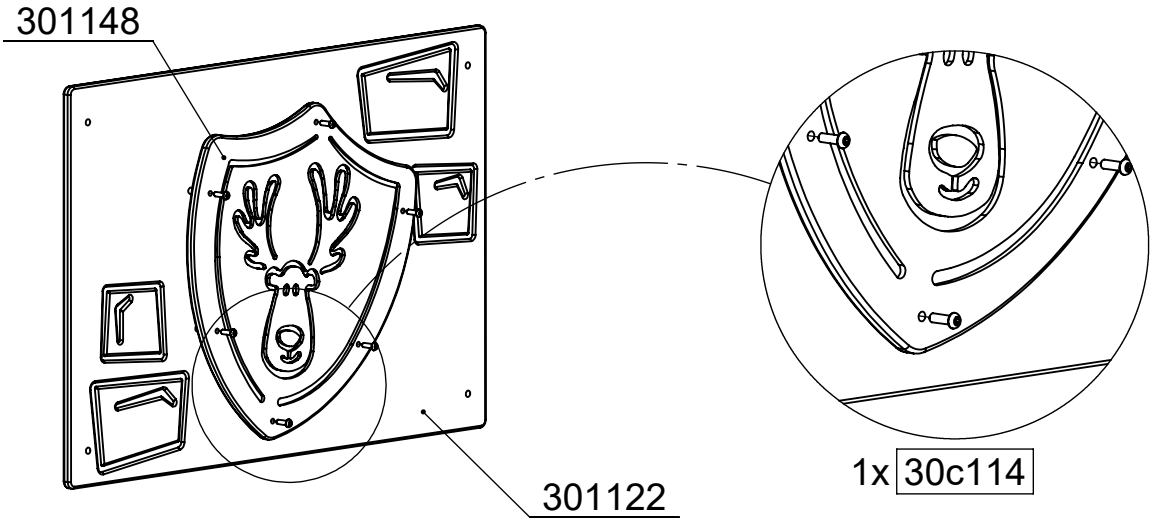

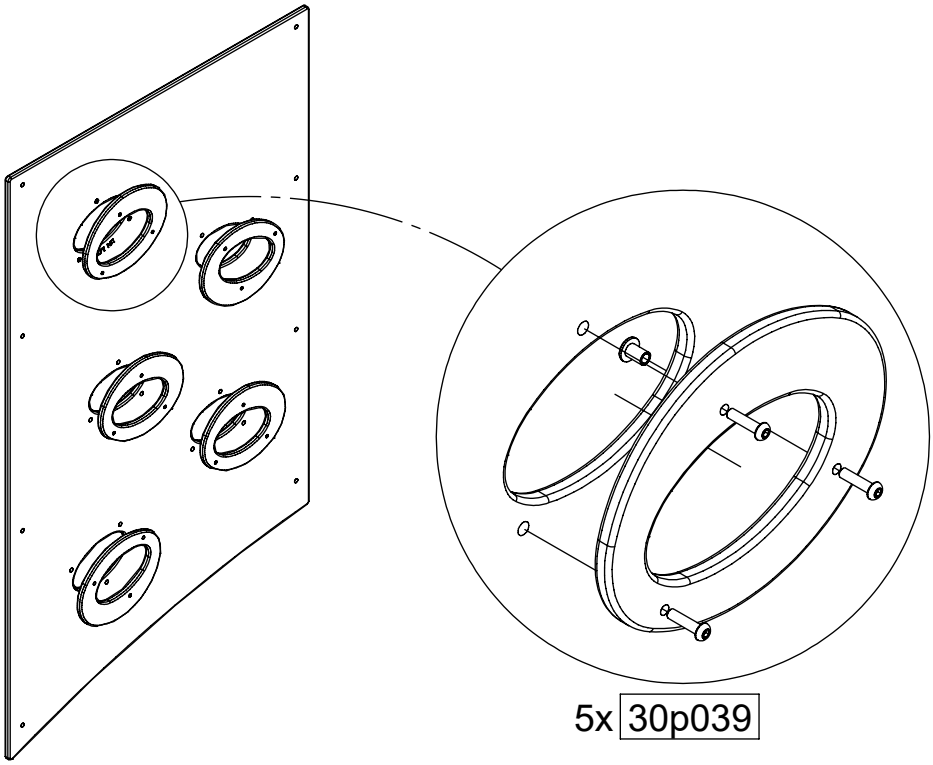

[cm]

vinci play

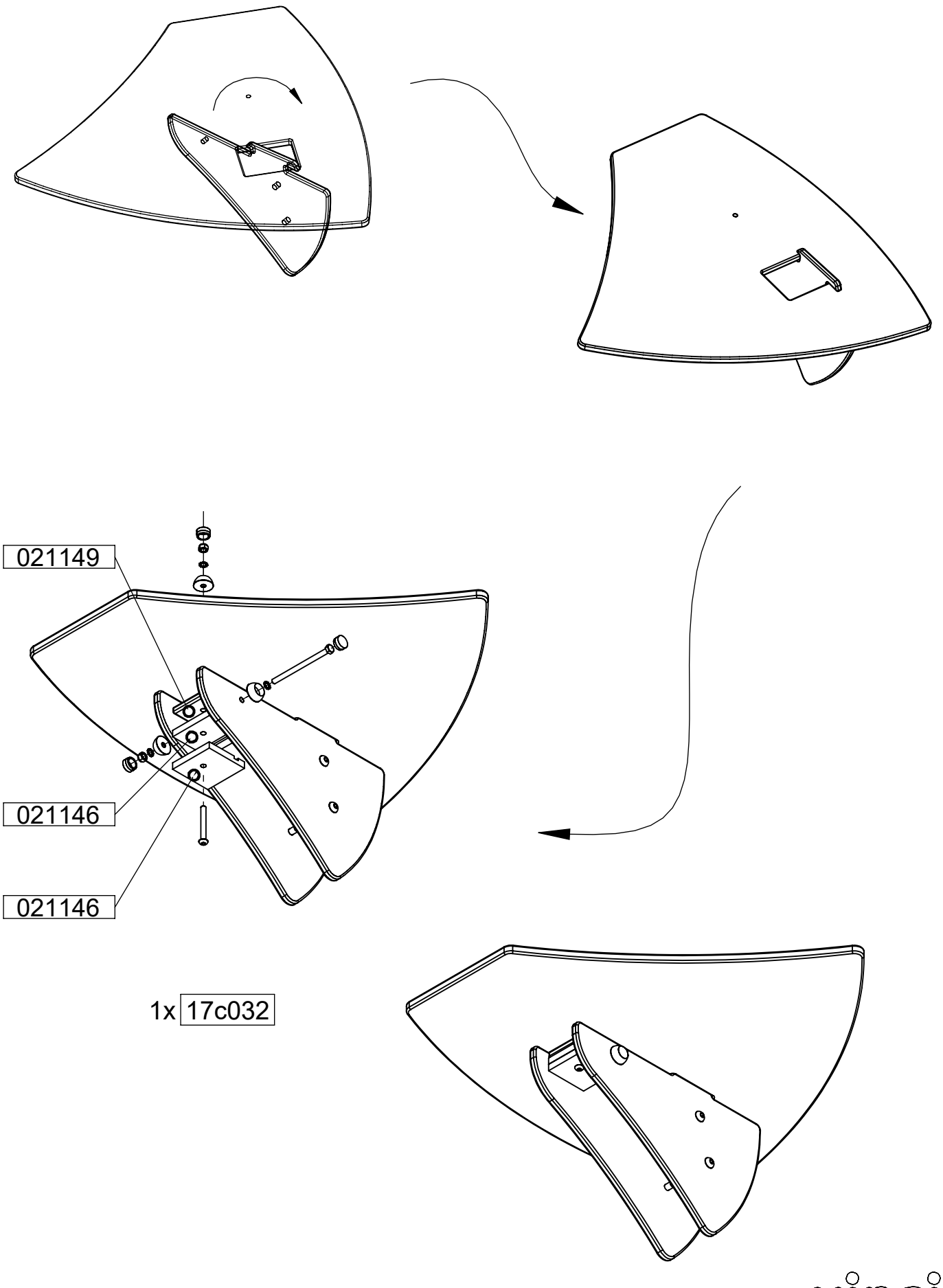

[cm]

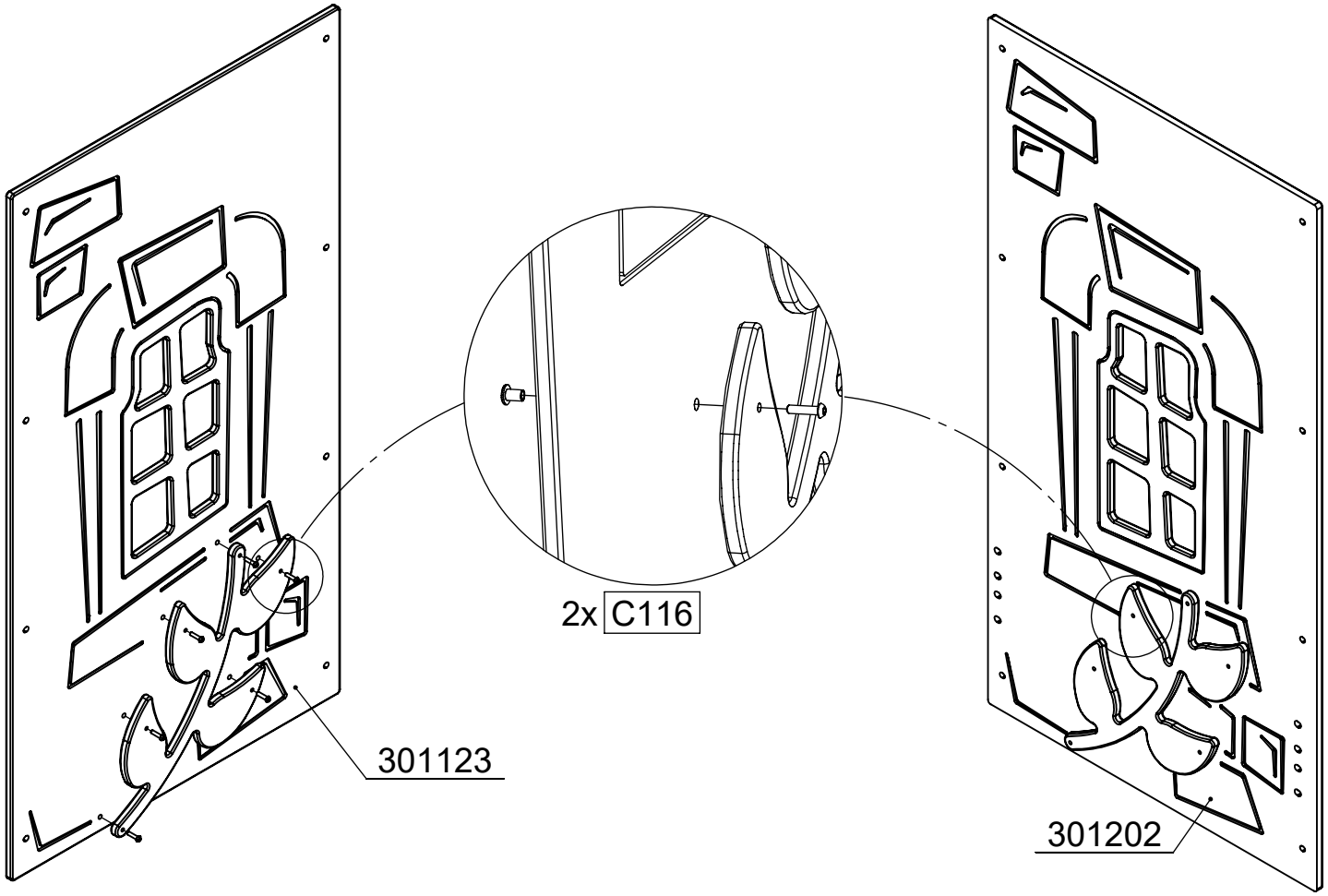

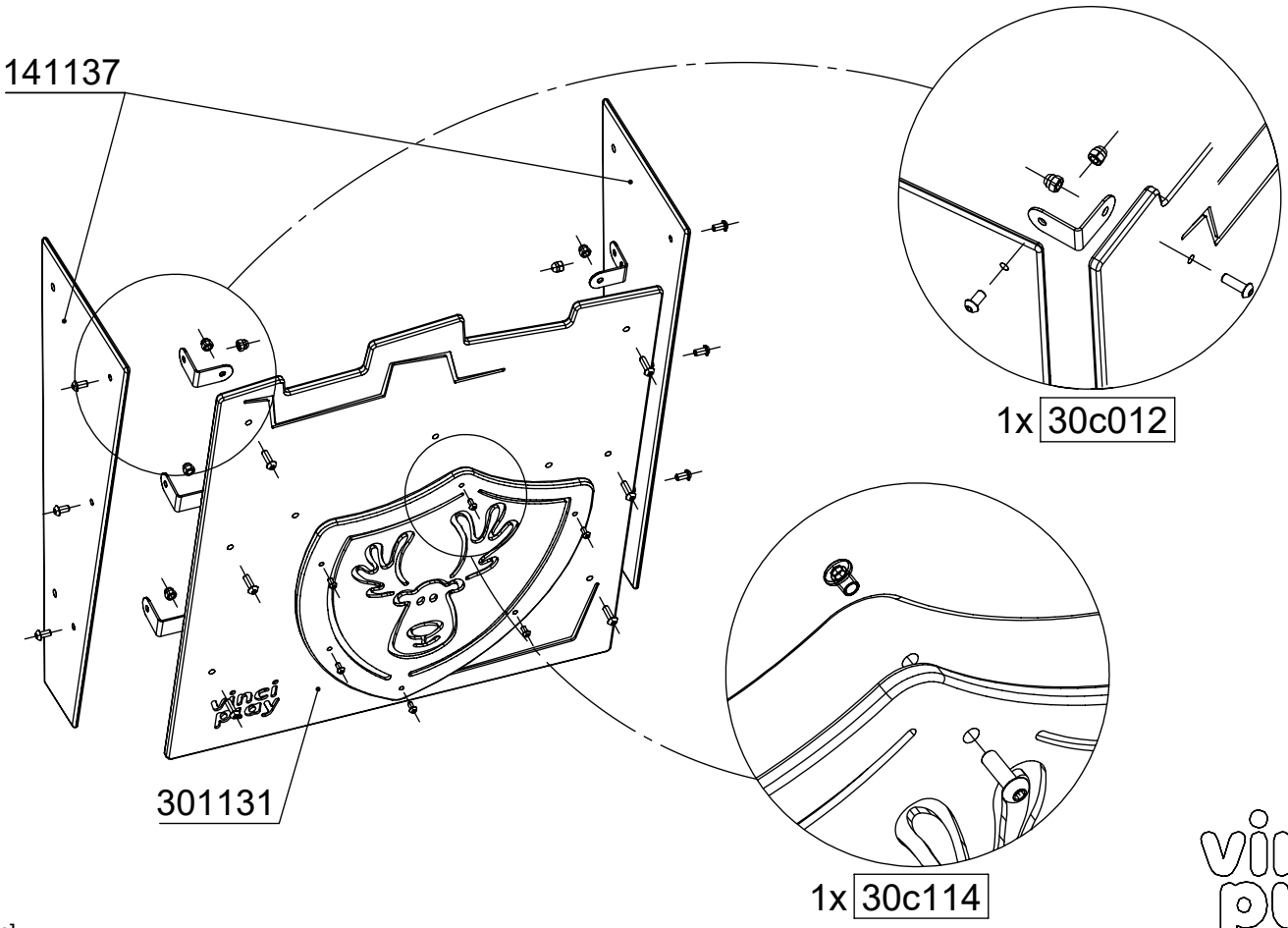

[cm]

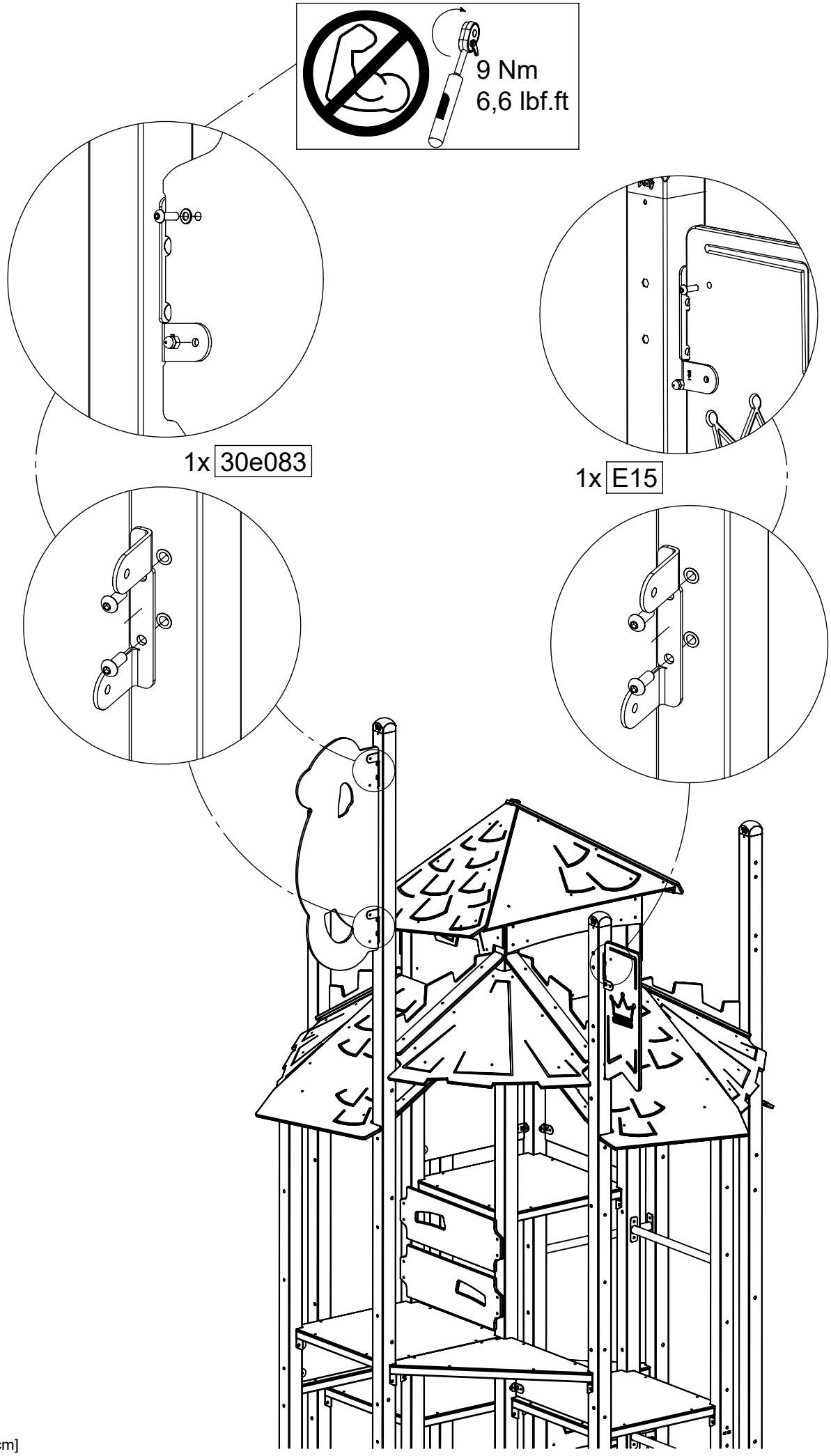
9 Nm
6,6 lbf.ft
1x 30e083
1x E15
[cm]

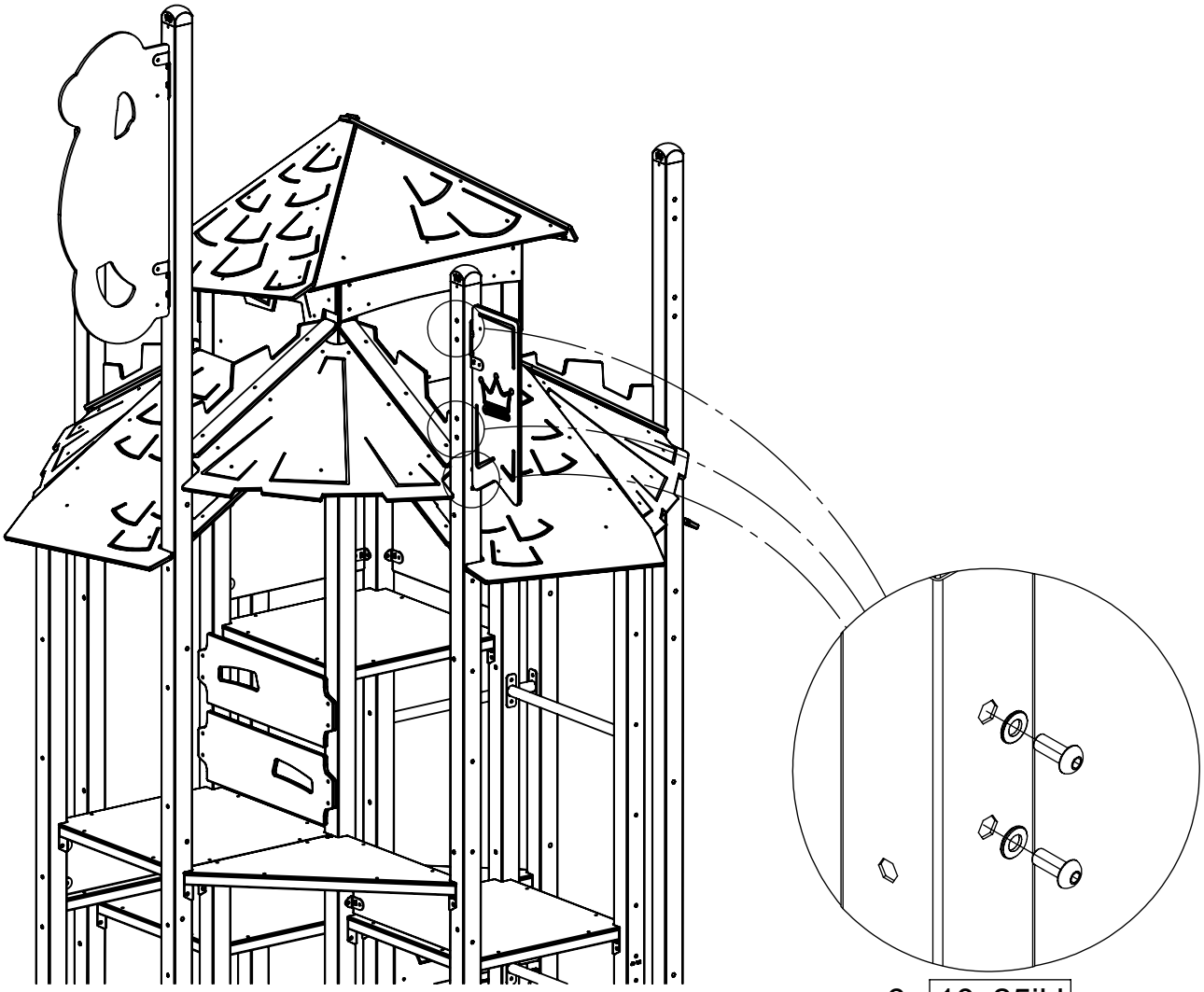

6x 10x25ikl

6x 10pp

[cm]

vinci play

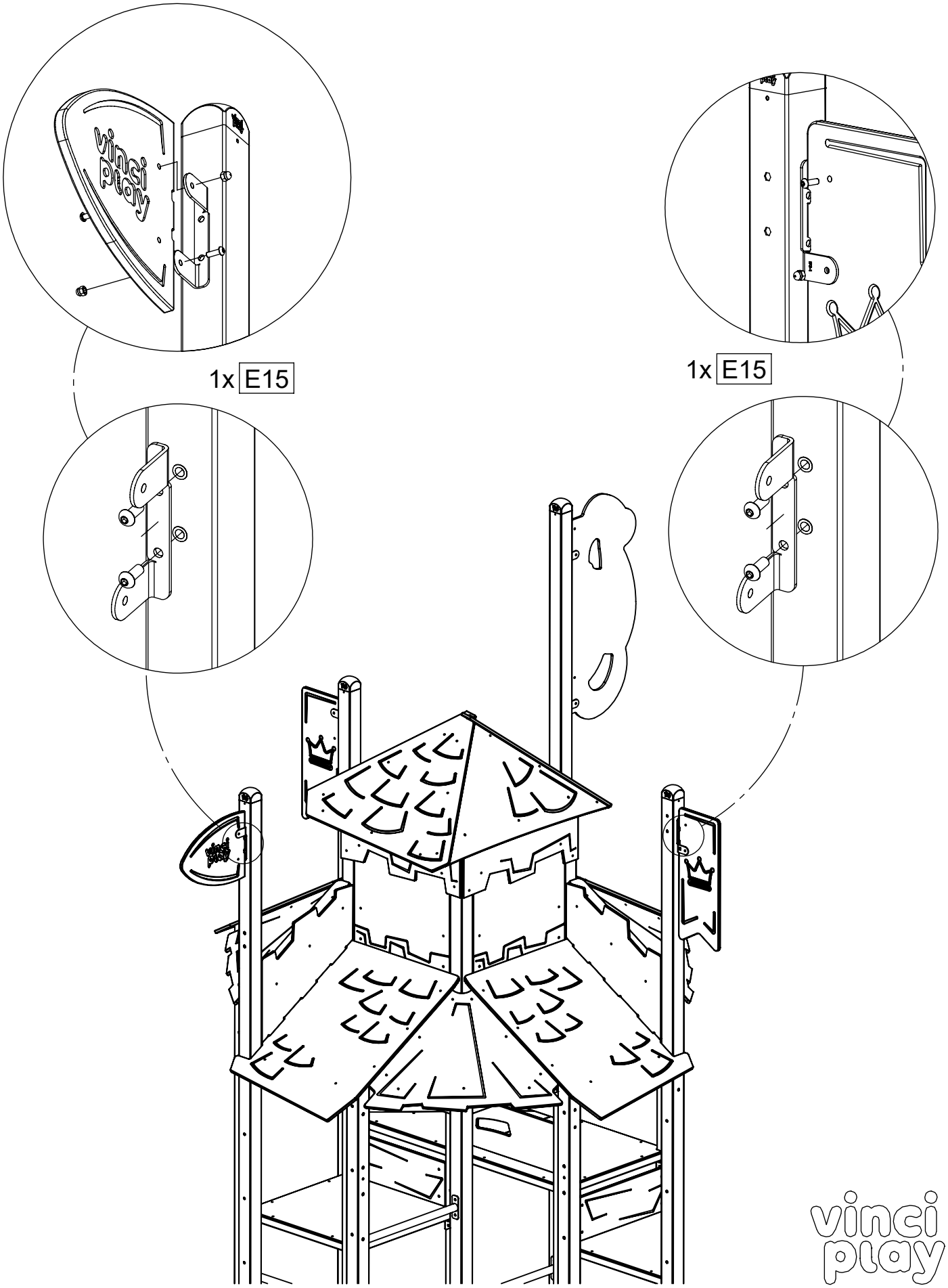
1x E15
1x E15
[cm]

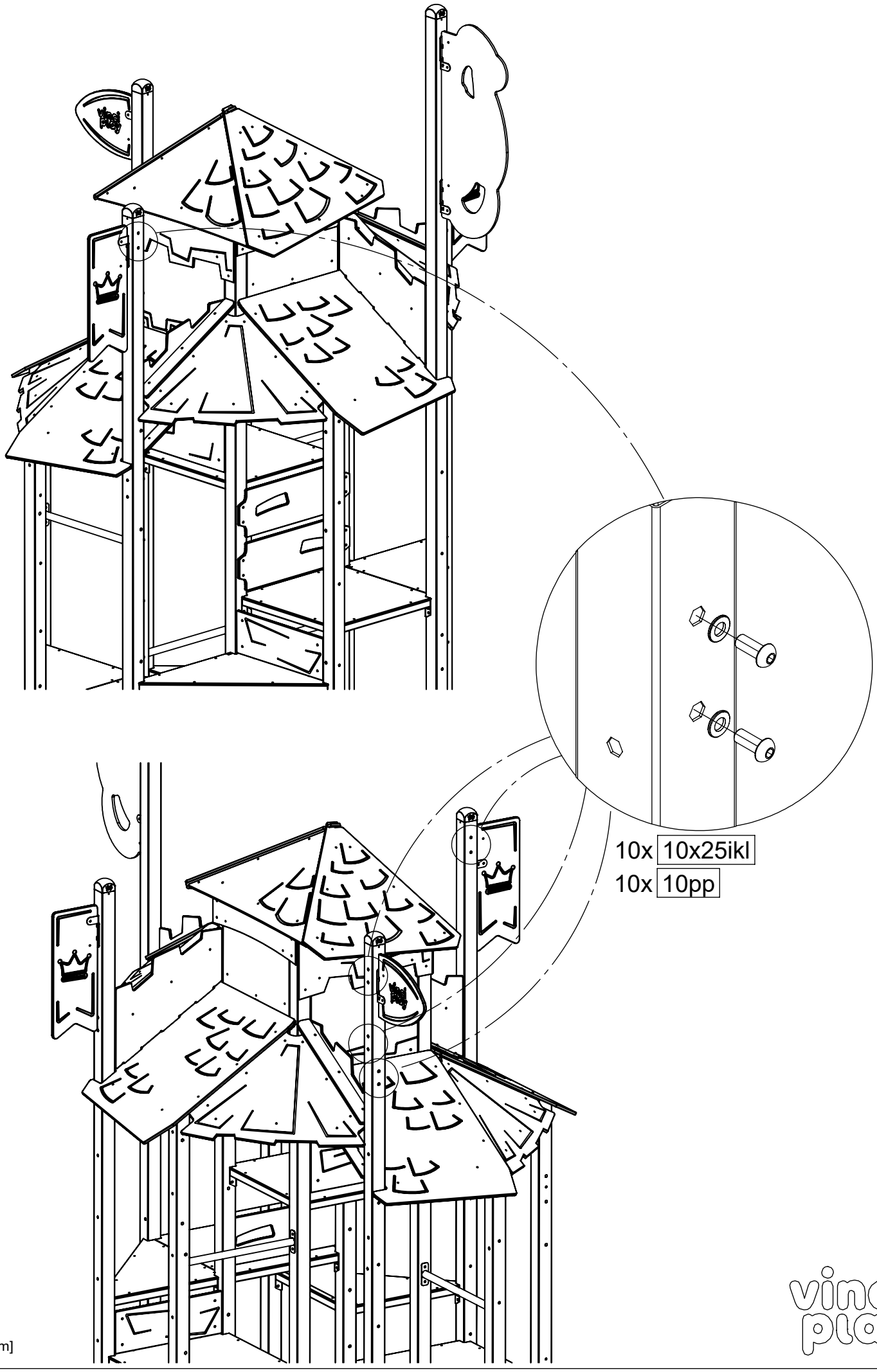
10x 10x25ikl
10x 10pp
[cm]
vinci play

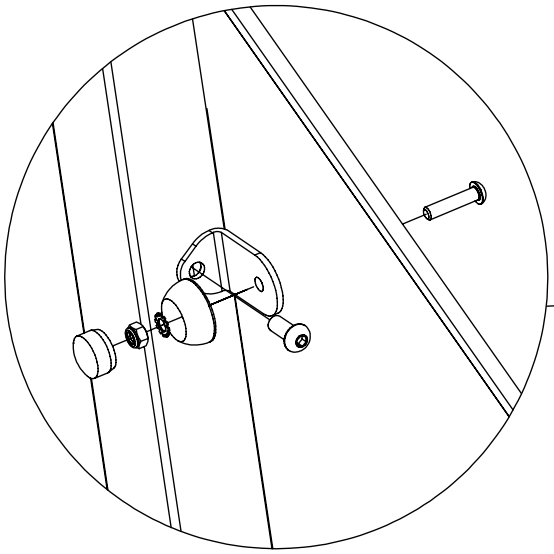

2x 17c004

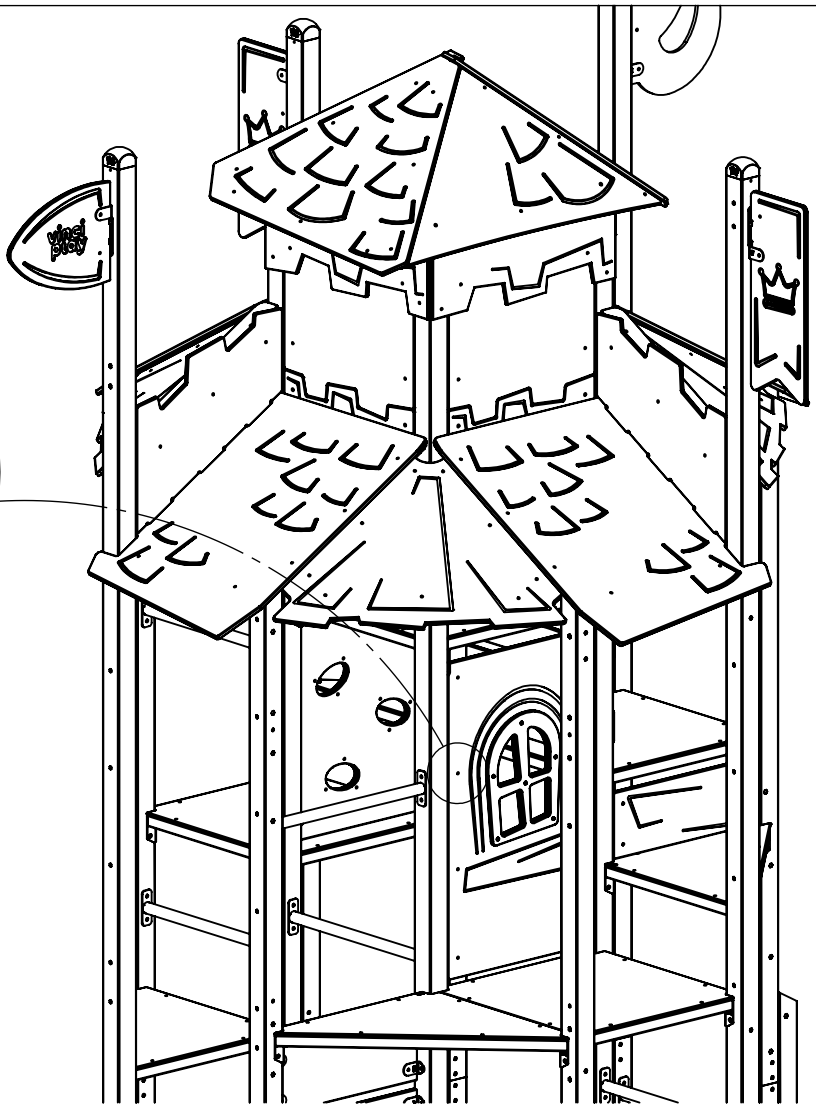

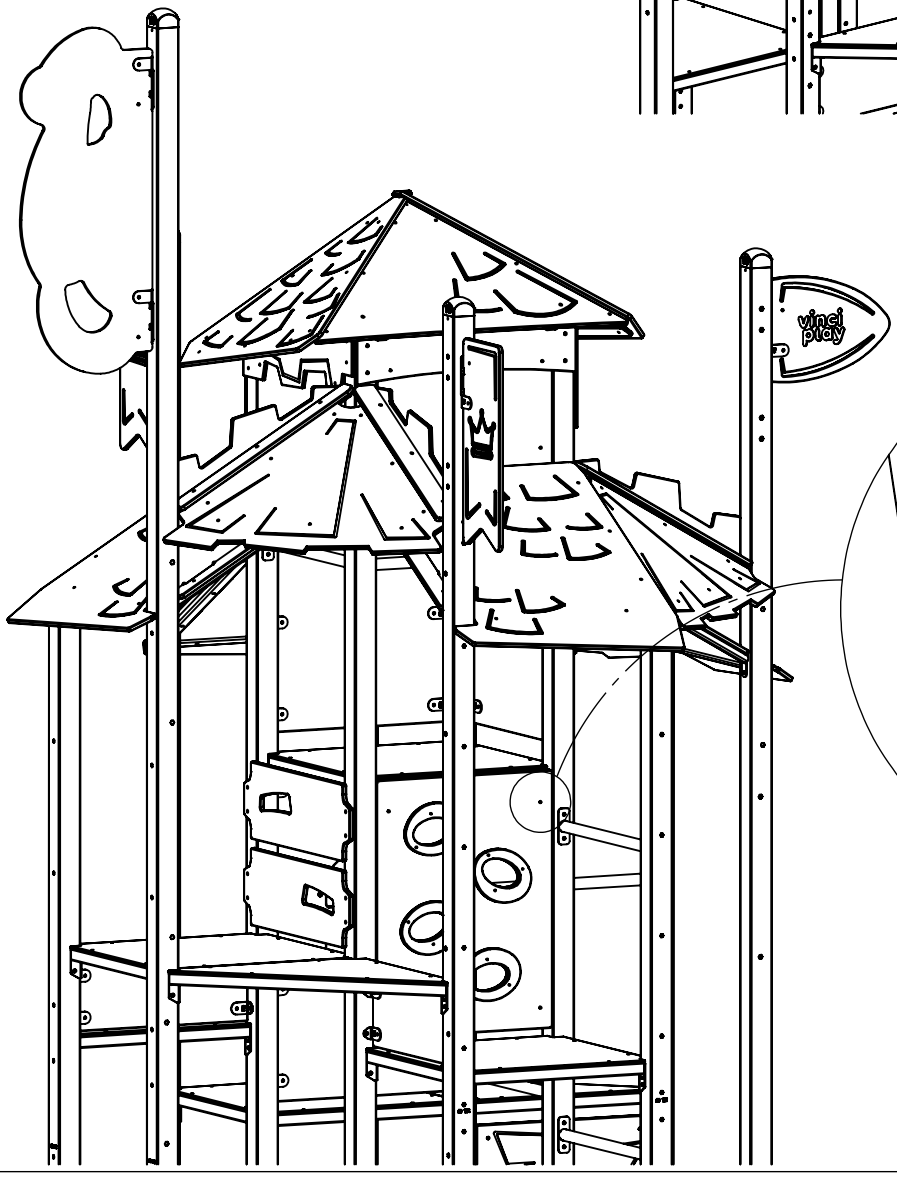

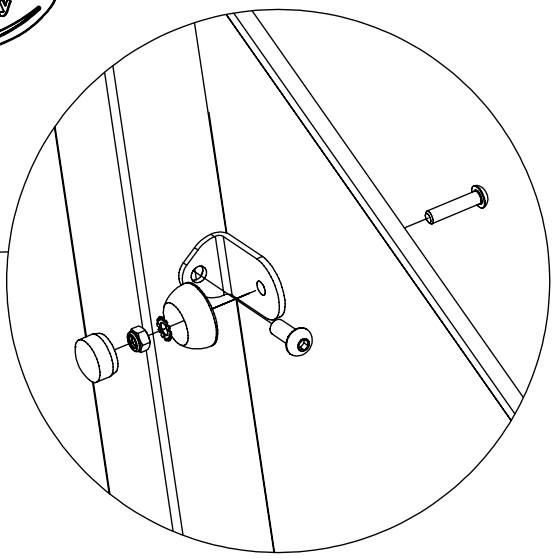

1x 30c002

[cm]

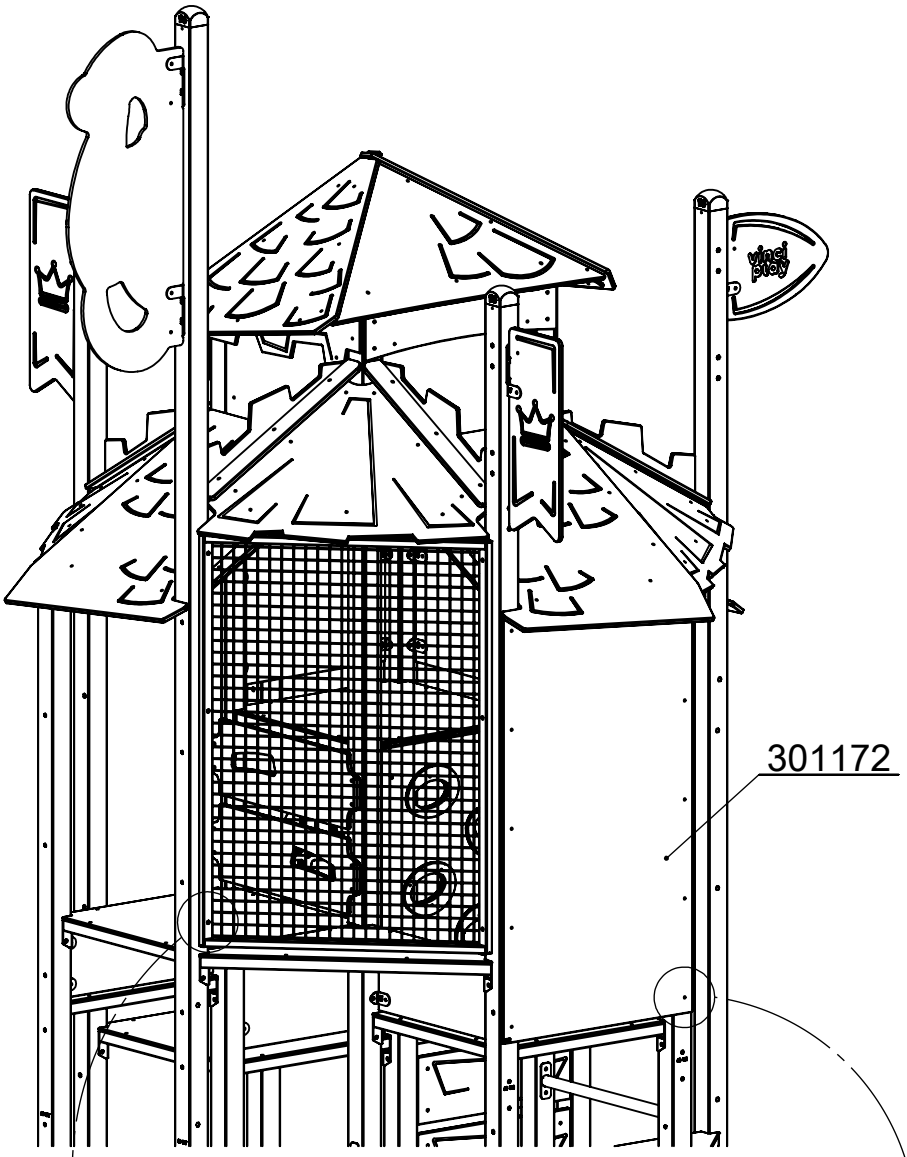

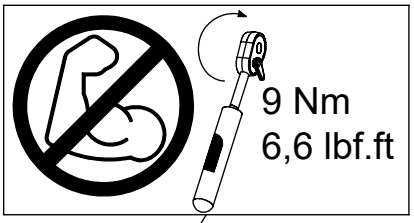

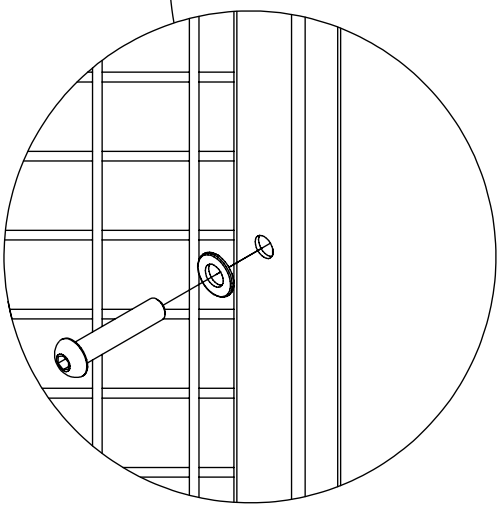

1x 30e032

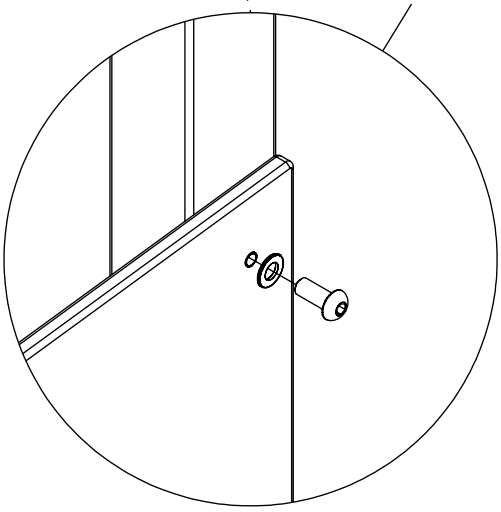

10x 8x25ikl
10x 8pp

[cm]

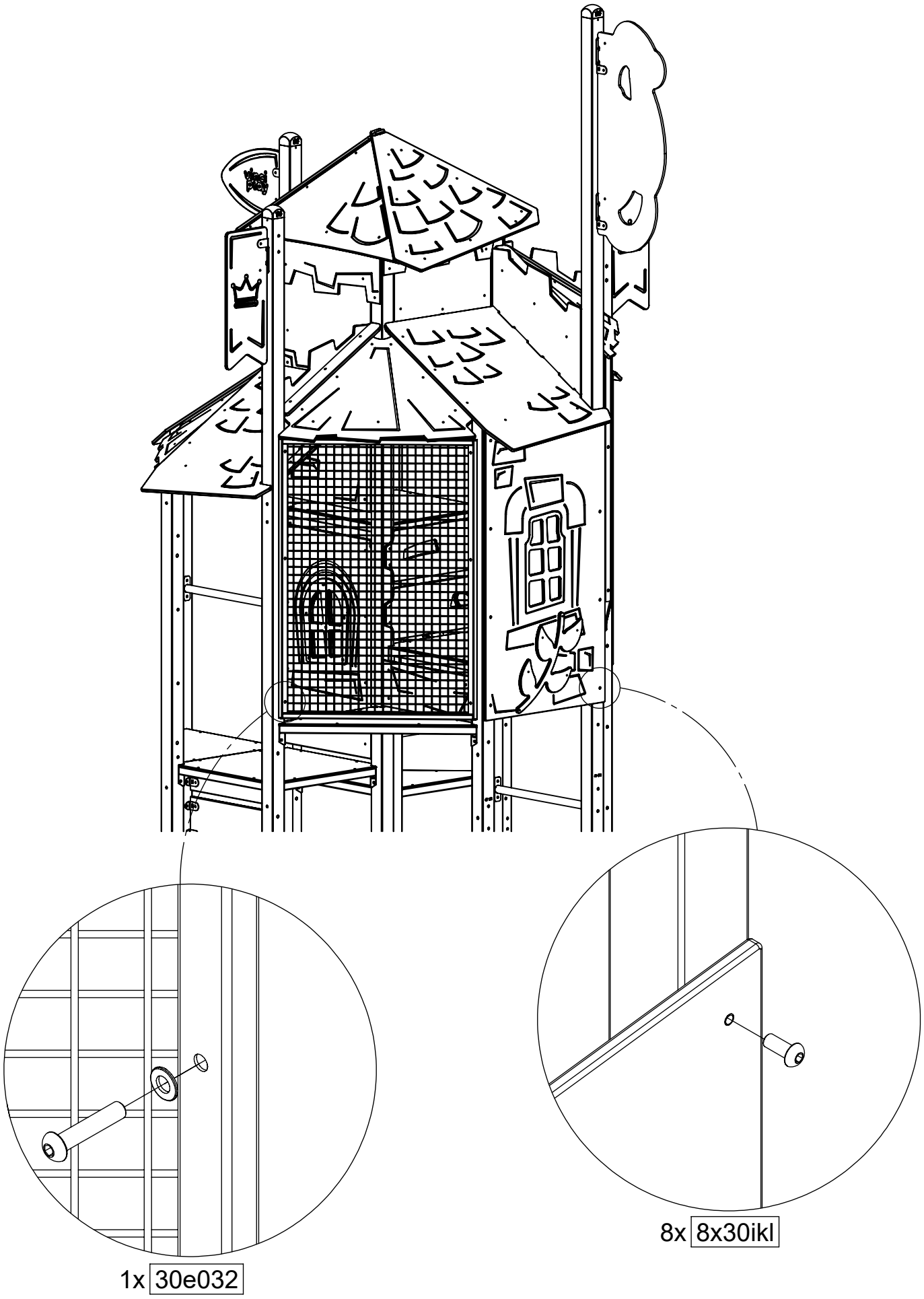

[cm]

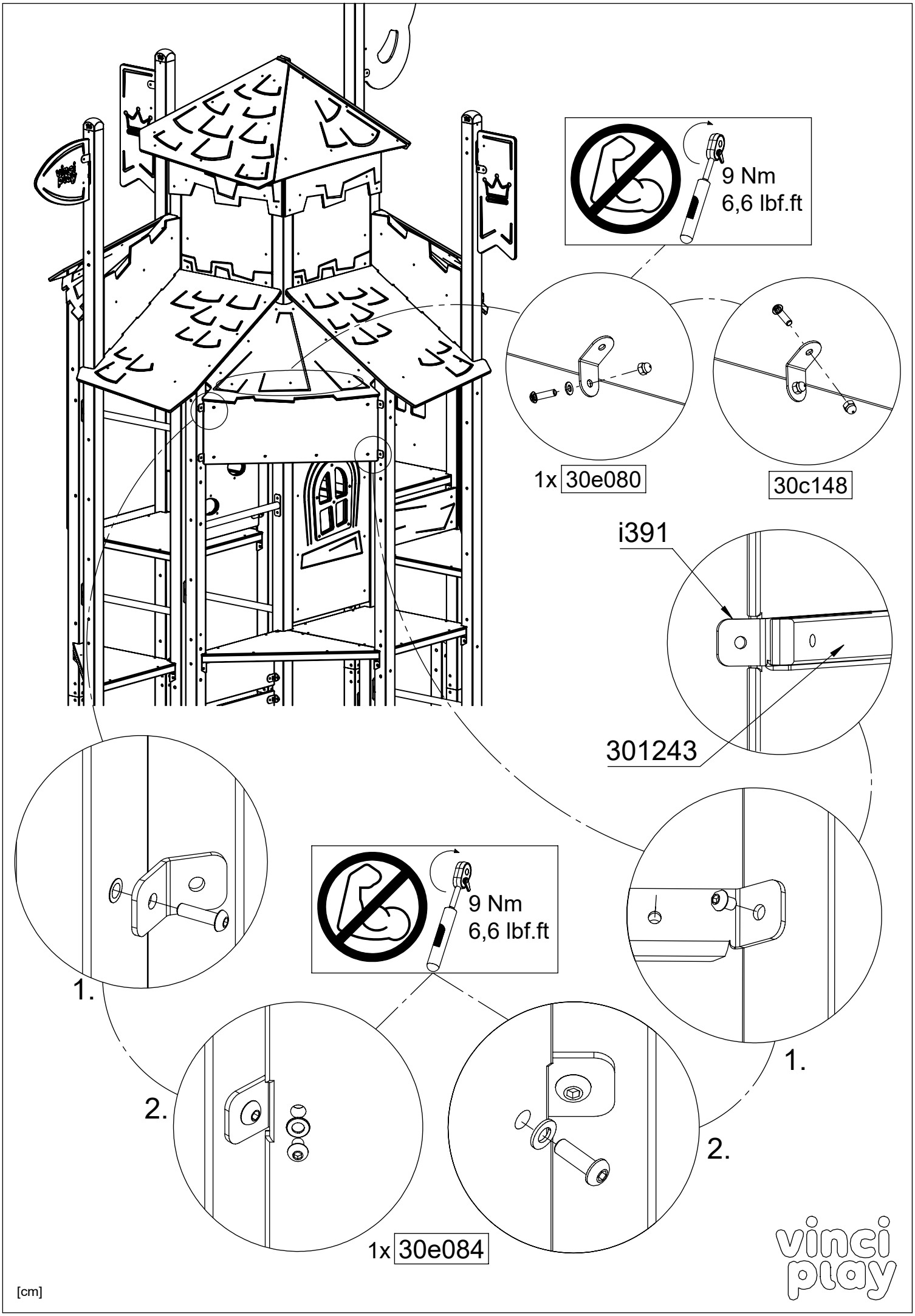
9 Nm
6,6 lbf.ft
1x 30e080
30c148
i391
301243
1.
9 Nm
6,6 lbf.ft
1.
2.
2.
1x 30e084
[cm]
vinci play

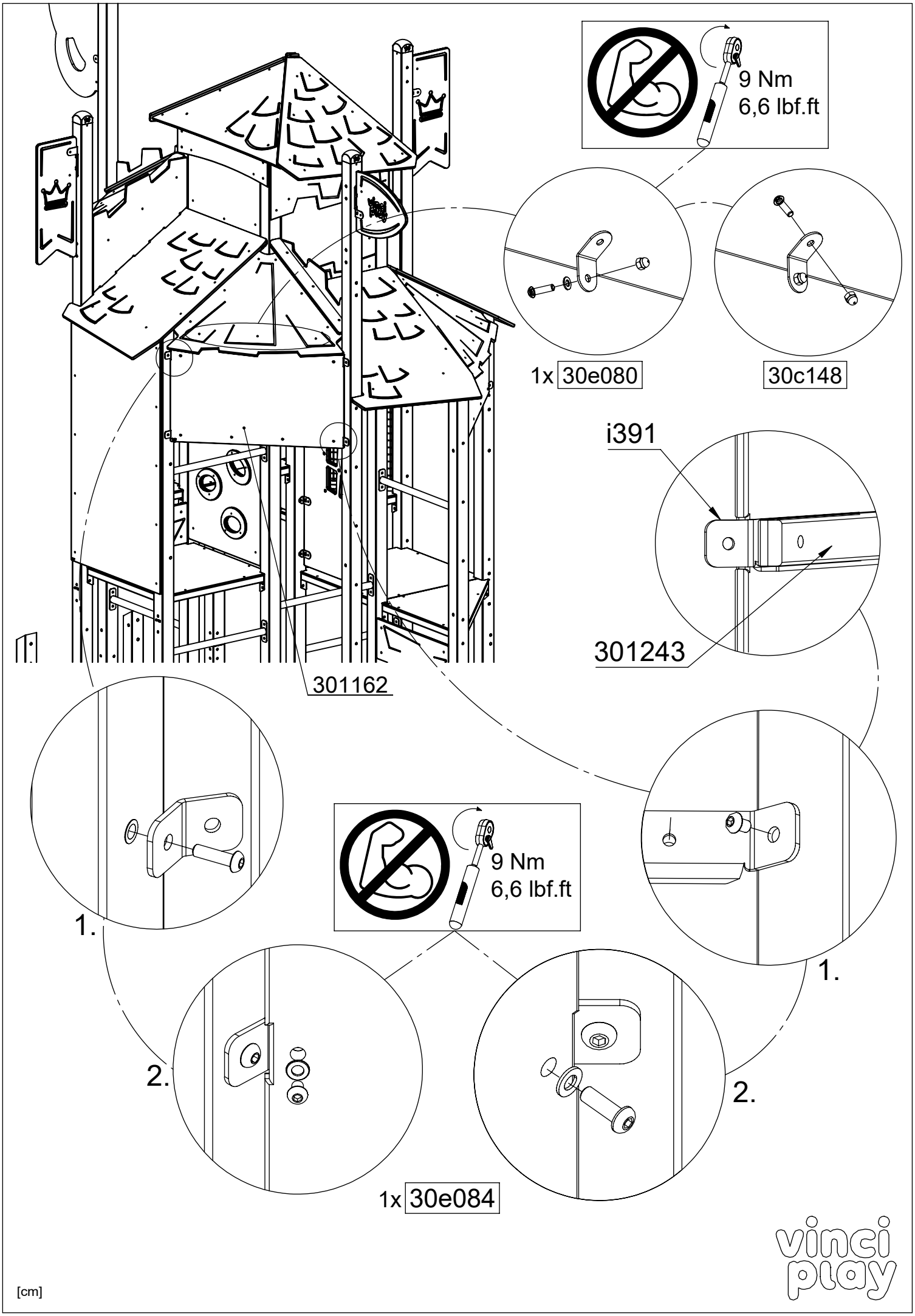
9 Nm
6,6 lbf.ft
1x 30e080
30c148
i391
301243
301162
1.
9 Nm
6,6 lbf.ft
1.
2.
2.
1x 30e084
[cm]
vinci play

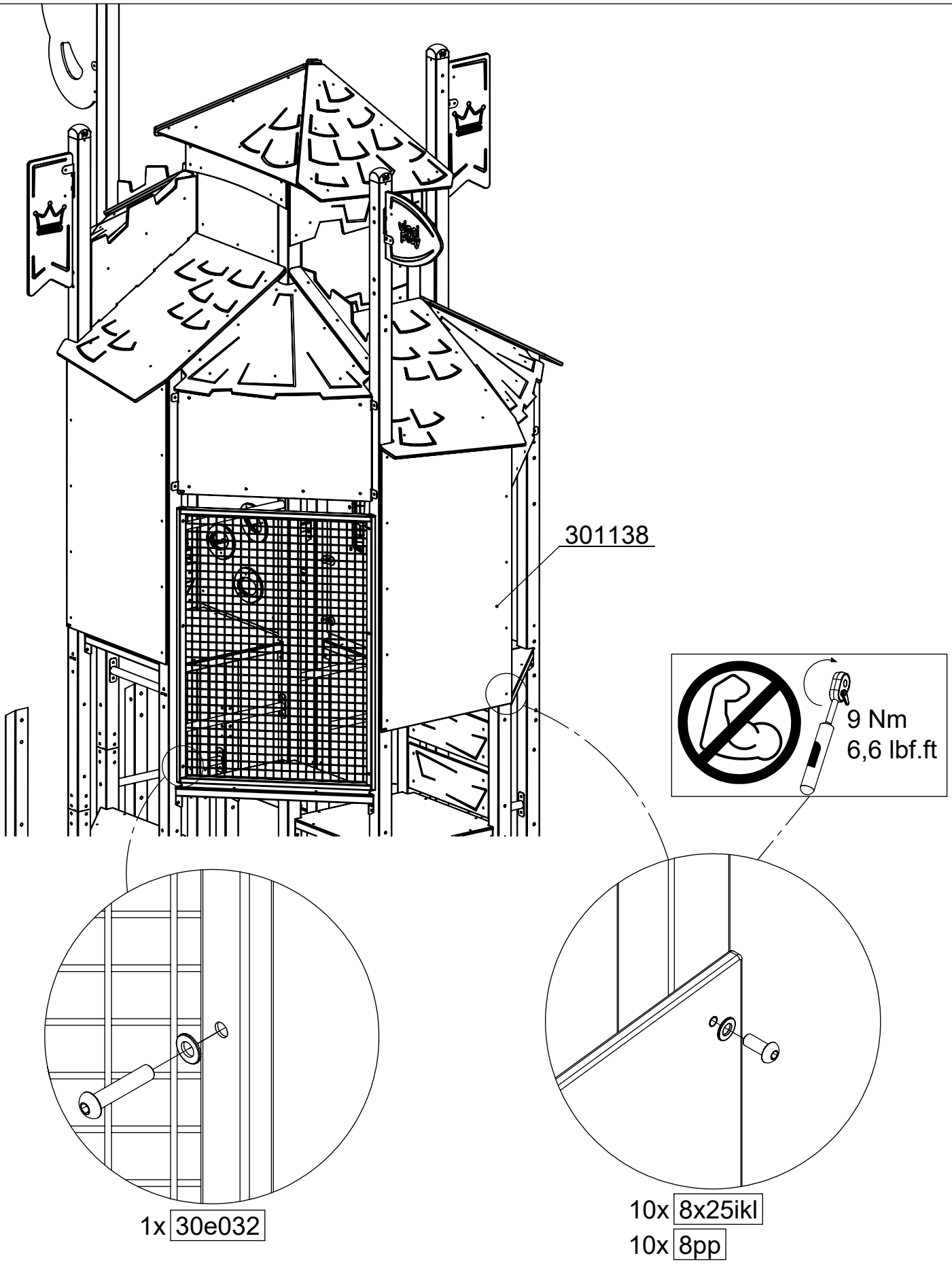

[cm]

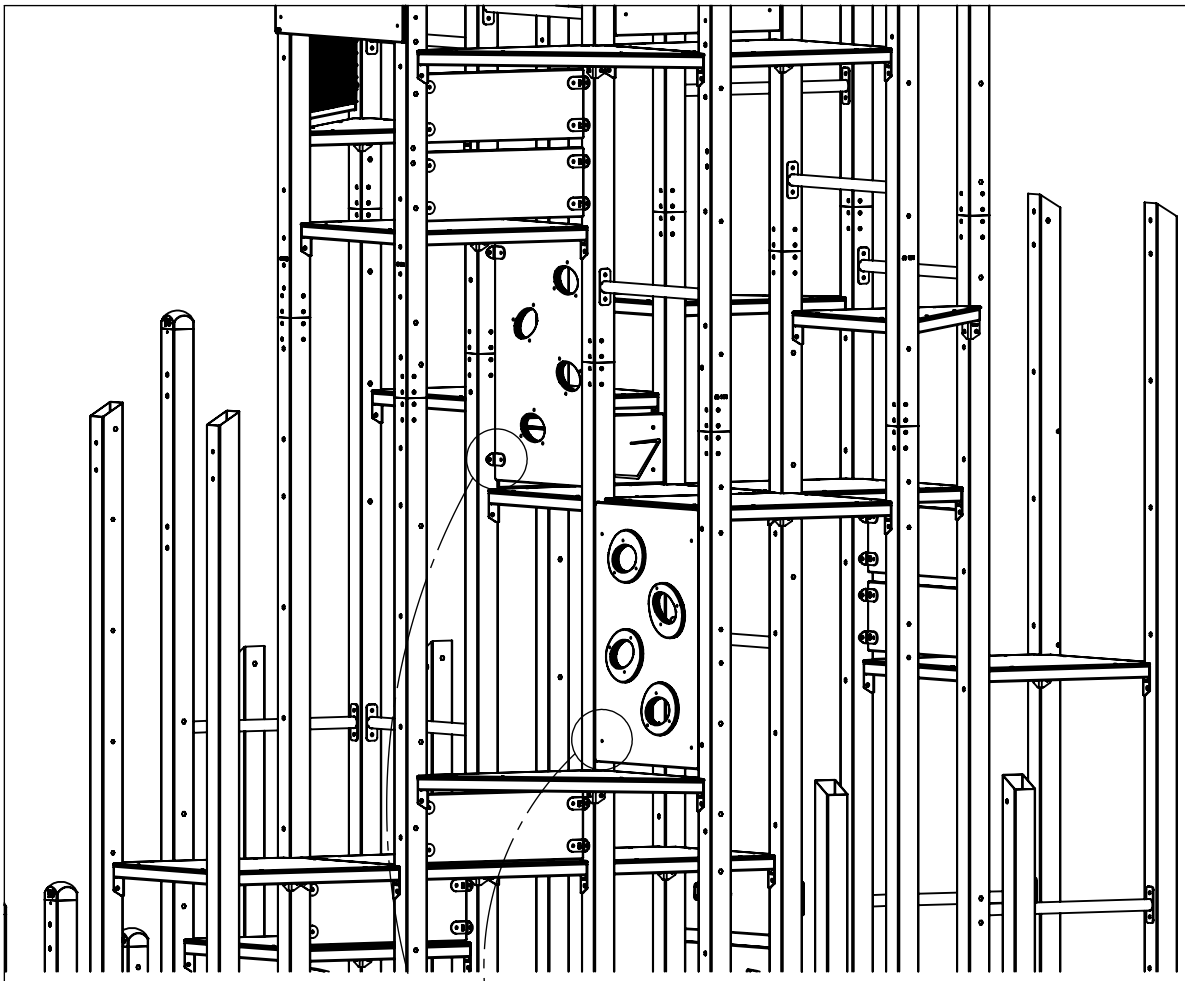

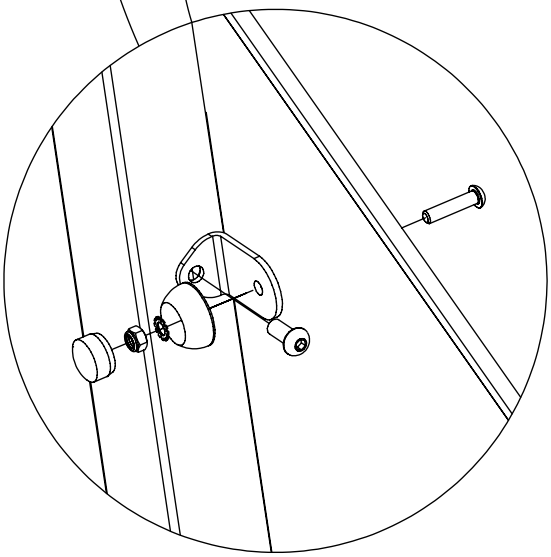

2x 30c002

[cm]

vinci play

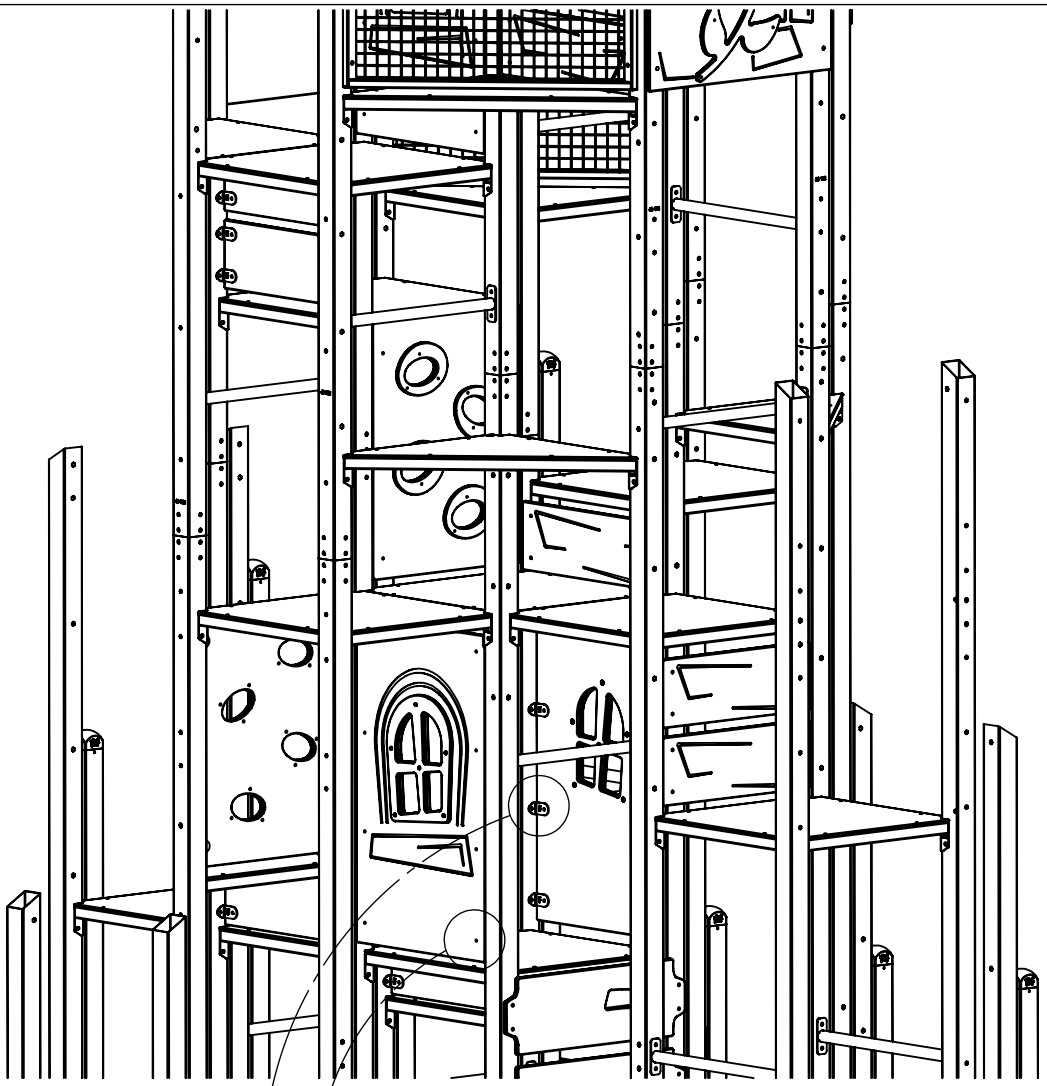

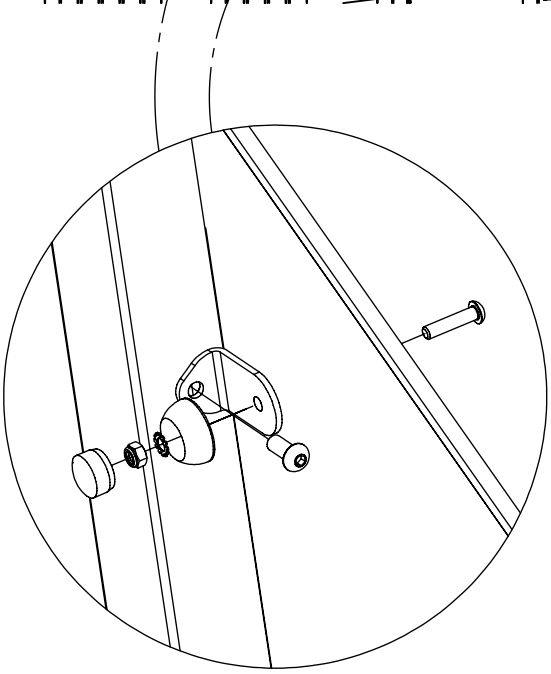

4x 17c004

[cm]

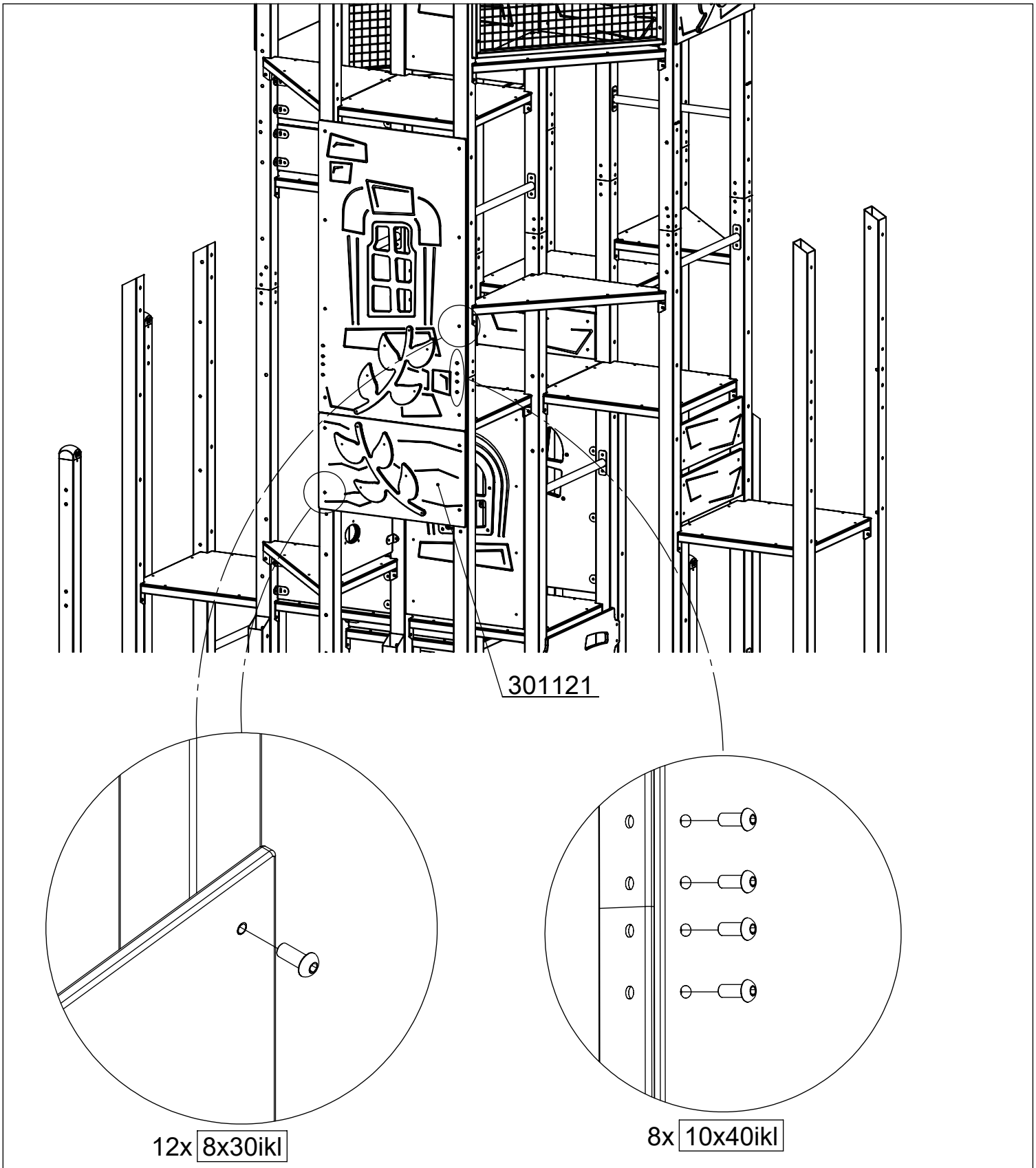

[cm]

vinci play

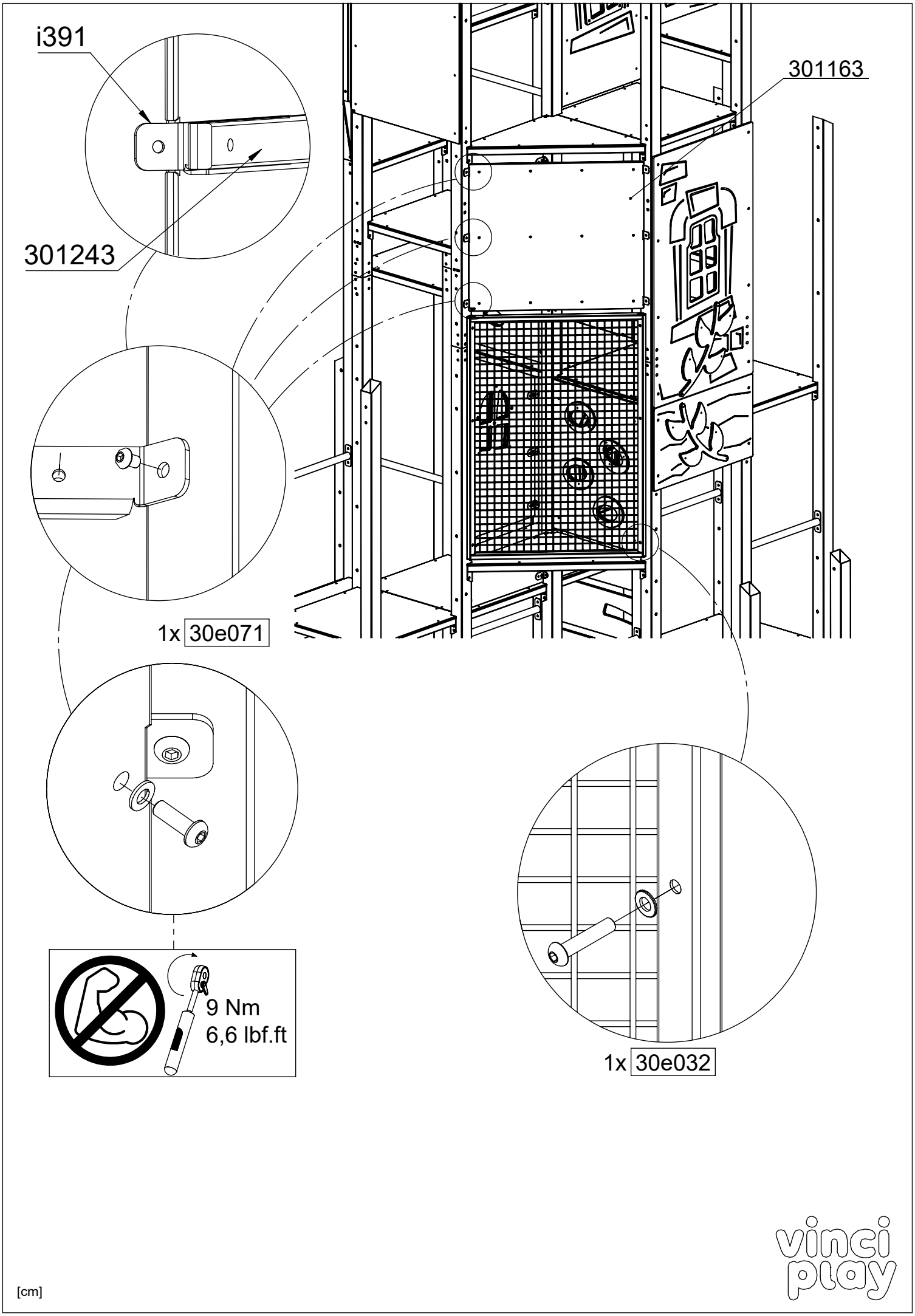
i391
301163
301243
1x 30e071
9 Nm
6,6 lbf.ft
1x 30e032
[cm]
vinci play

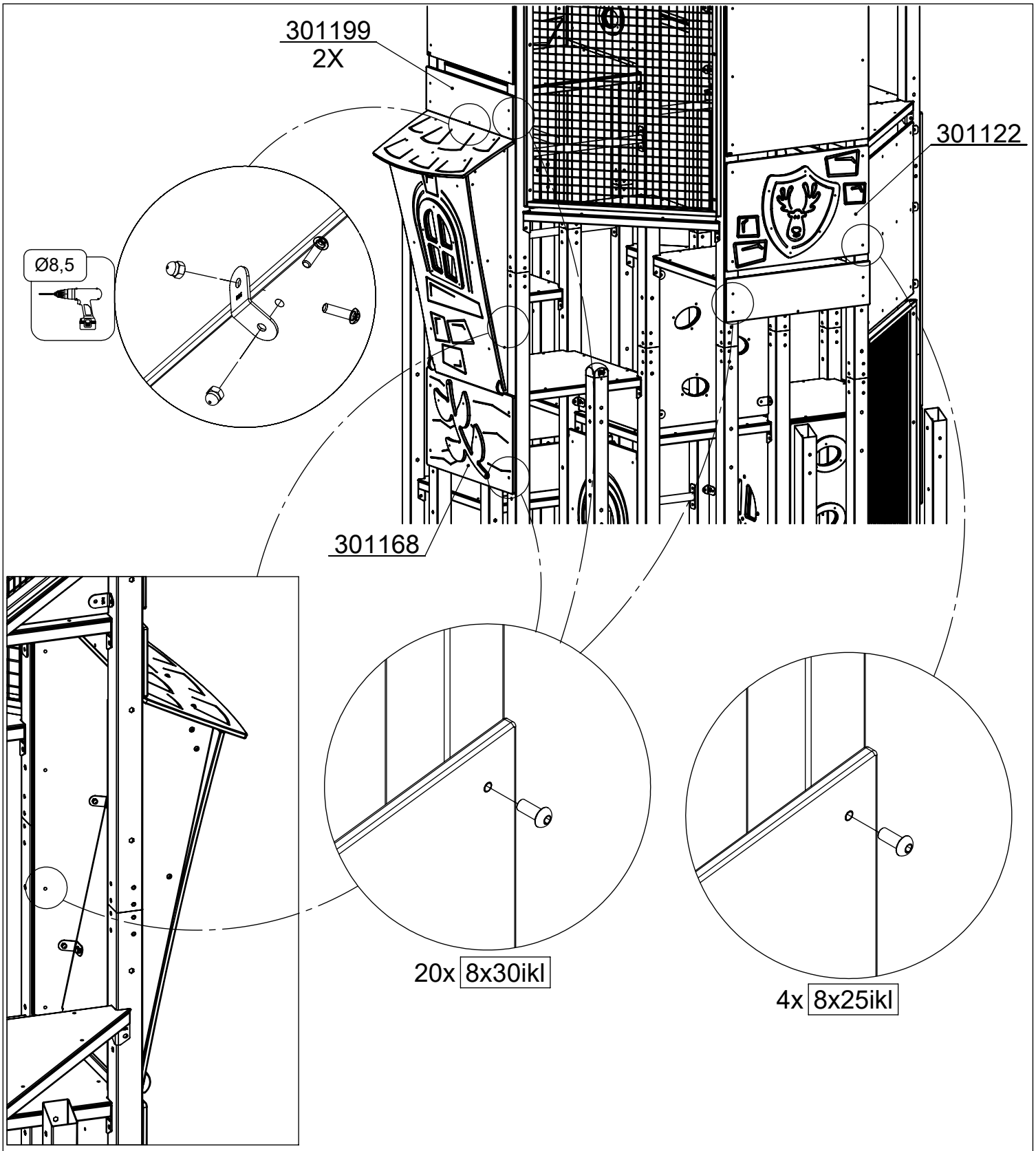

[cm]

vinci play

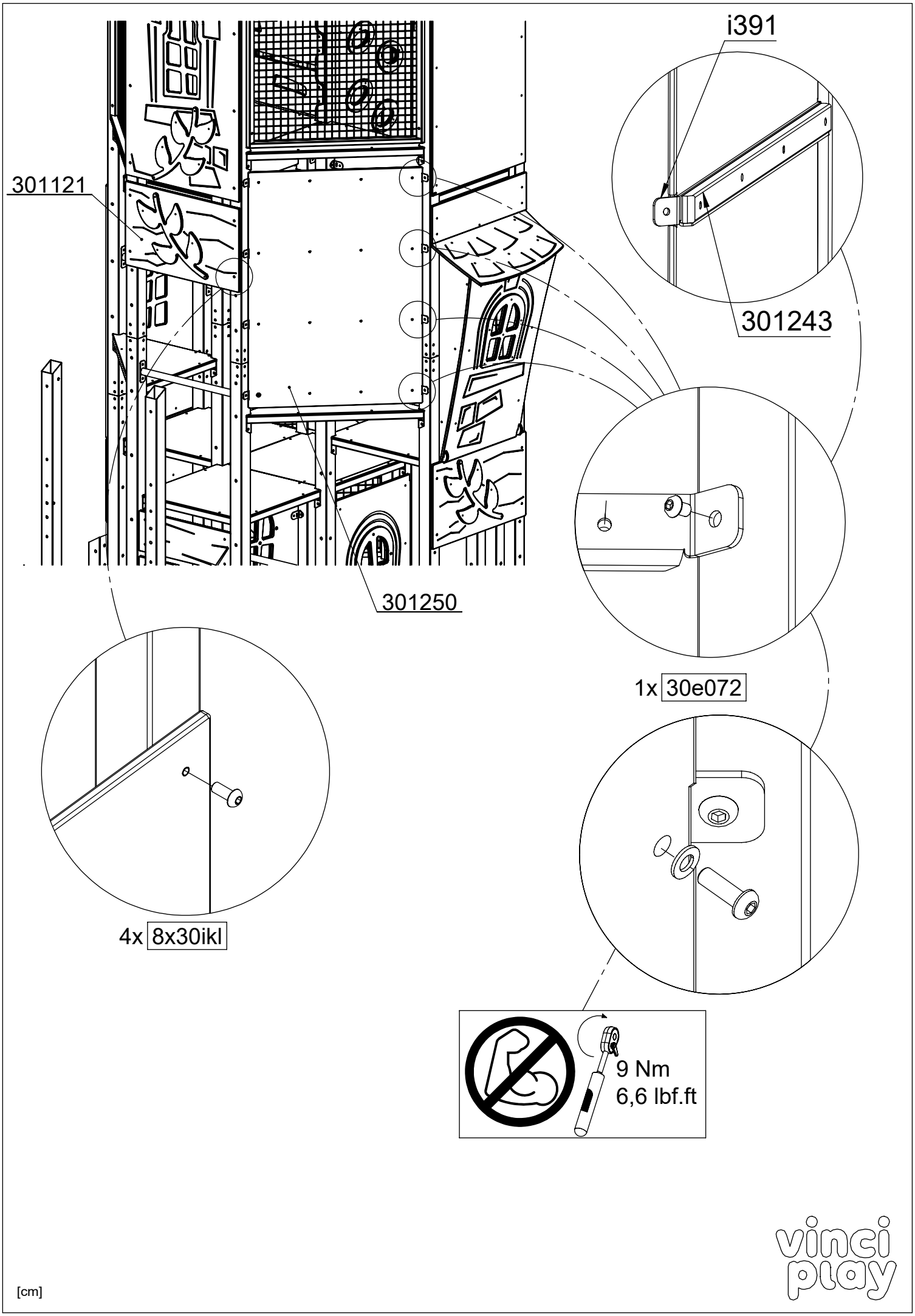
i391
301121
301243
301250
1x 30e072
4x 8x30ikl
9 Nm
6,6 lbf.ft
[cm]

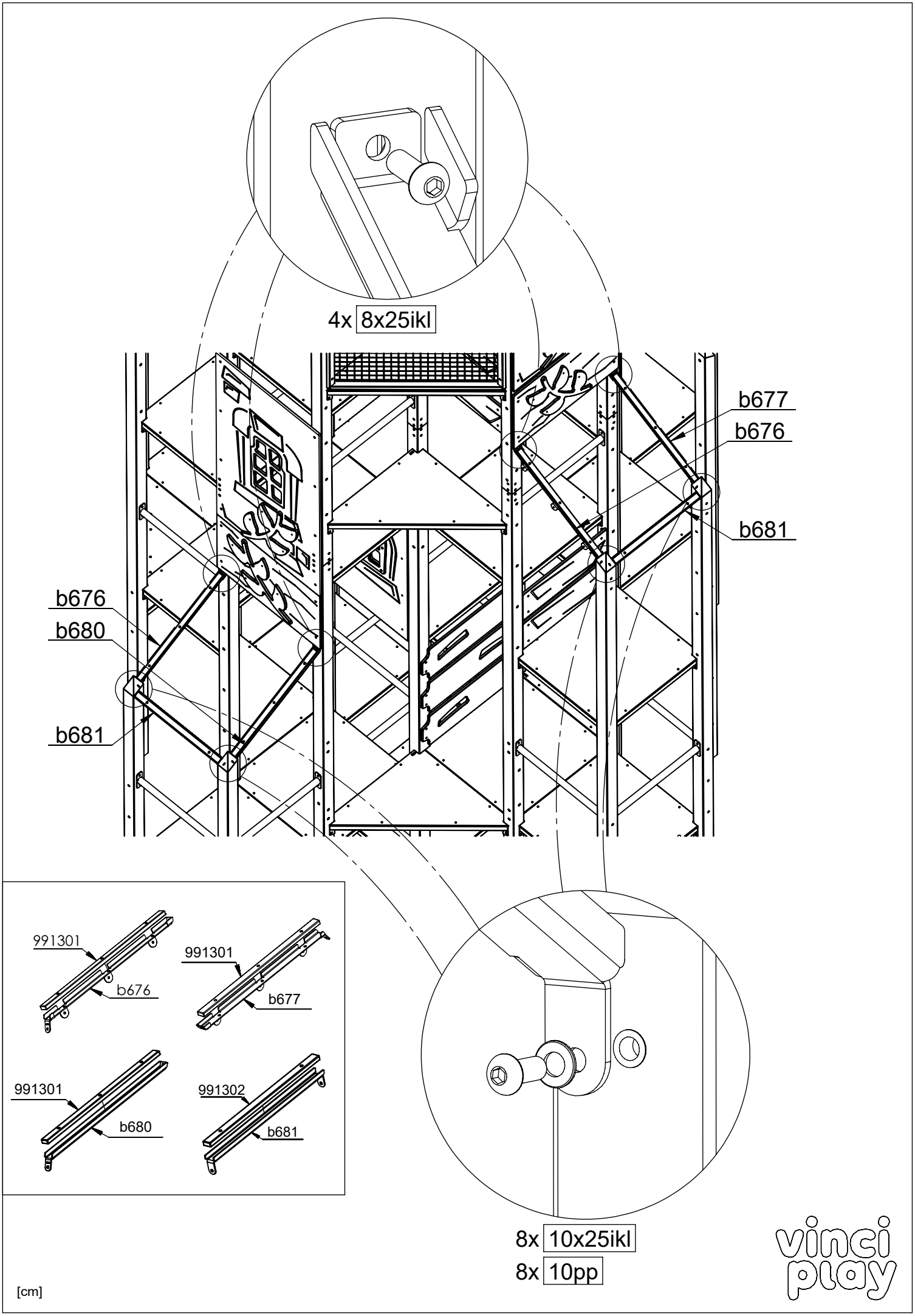
4x 8x25ikl
b677
b676
b681
b676
b680
b681
991301
b676
991301
b677
991301
b680
991302
b681
8x 10x25ikl
8x 10pp
[cm]
vinci play

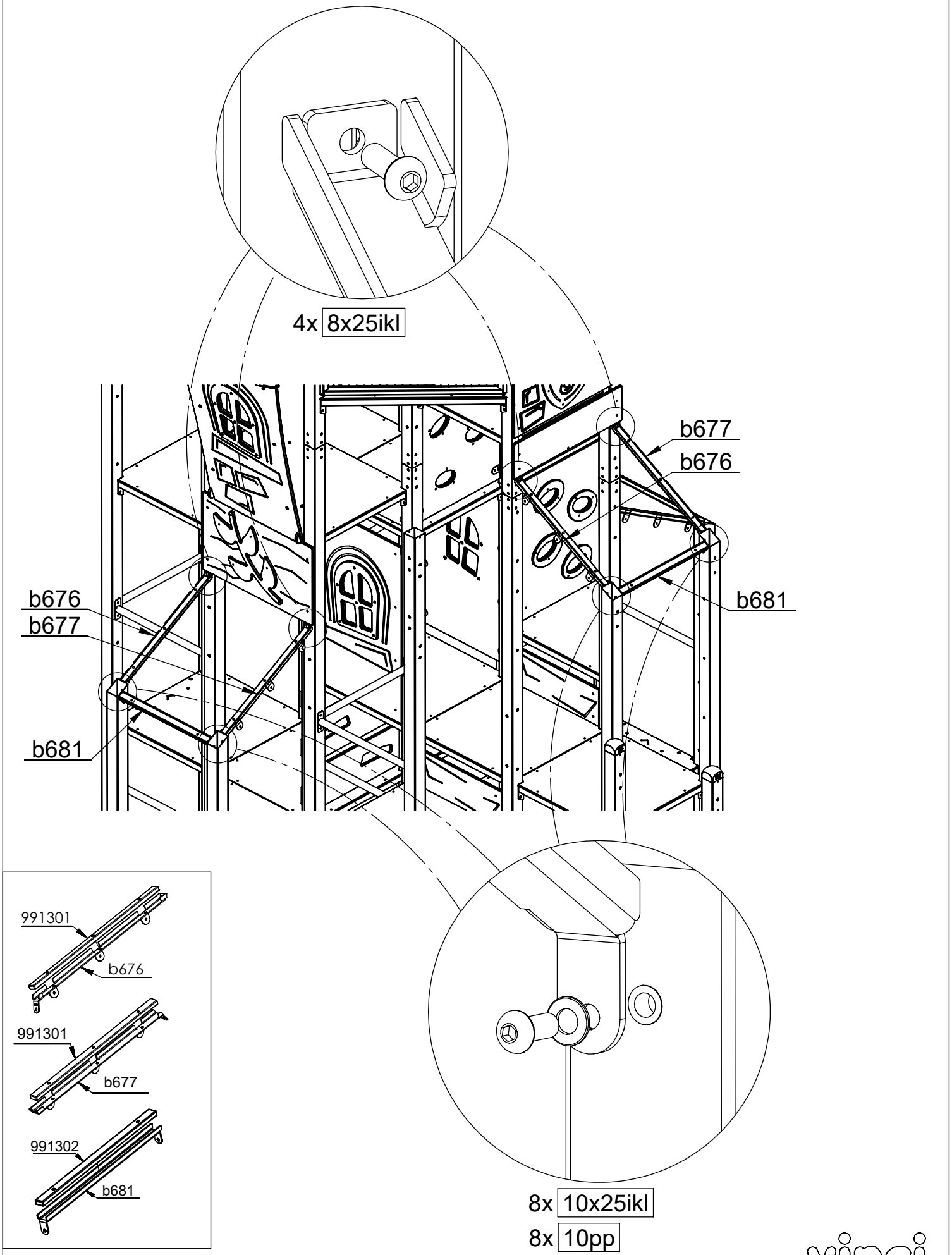
4x 8x25ikl
b677
b676
b676
b677
b681
b681
991301
b676
991301
b677
991302
b681
8x 10x25ikl
8x 10pp
[cm]

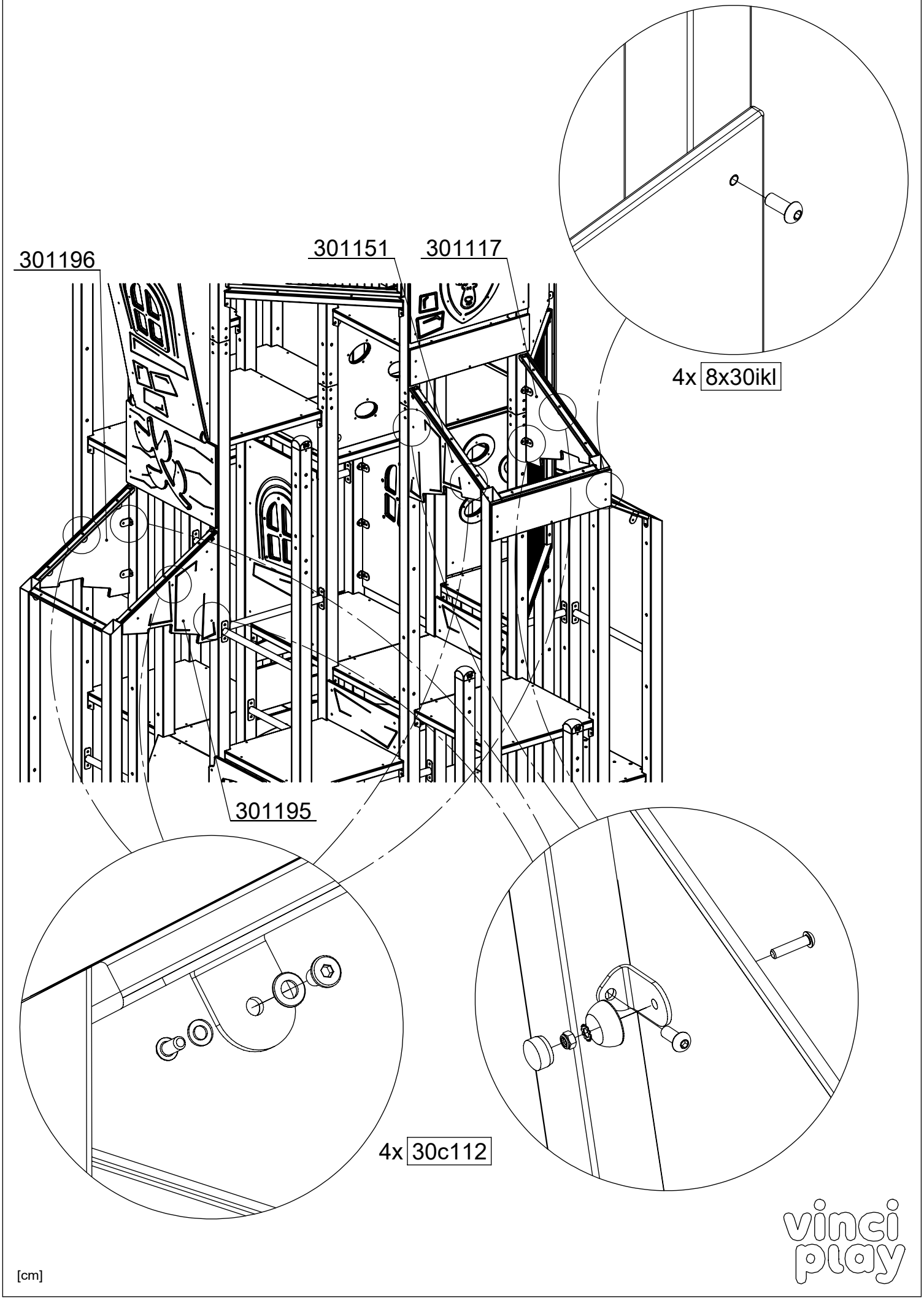
301196
301151
301117
4x 8x30ikl
301195
4x 30c112
[cm]
vinci play

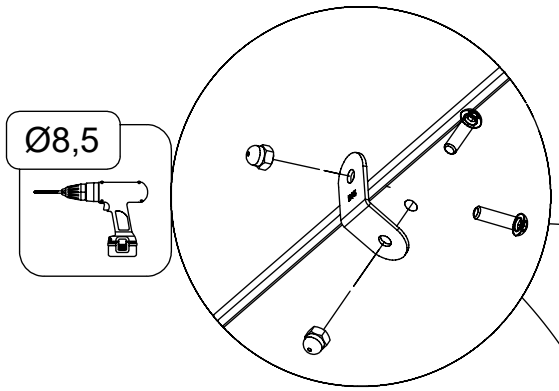

2x 30c124

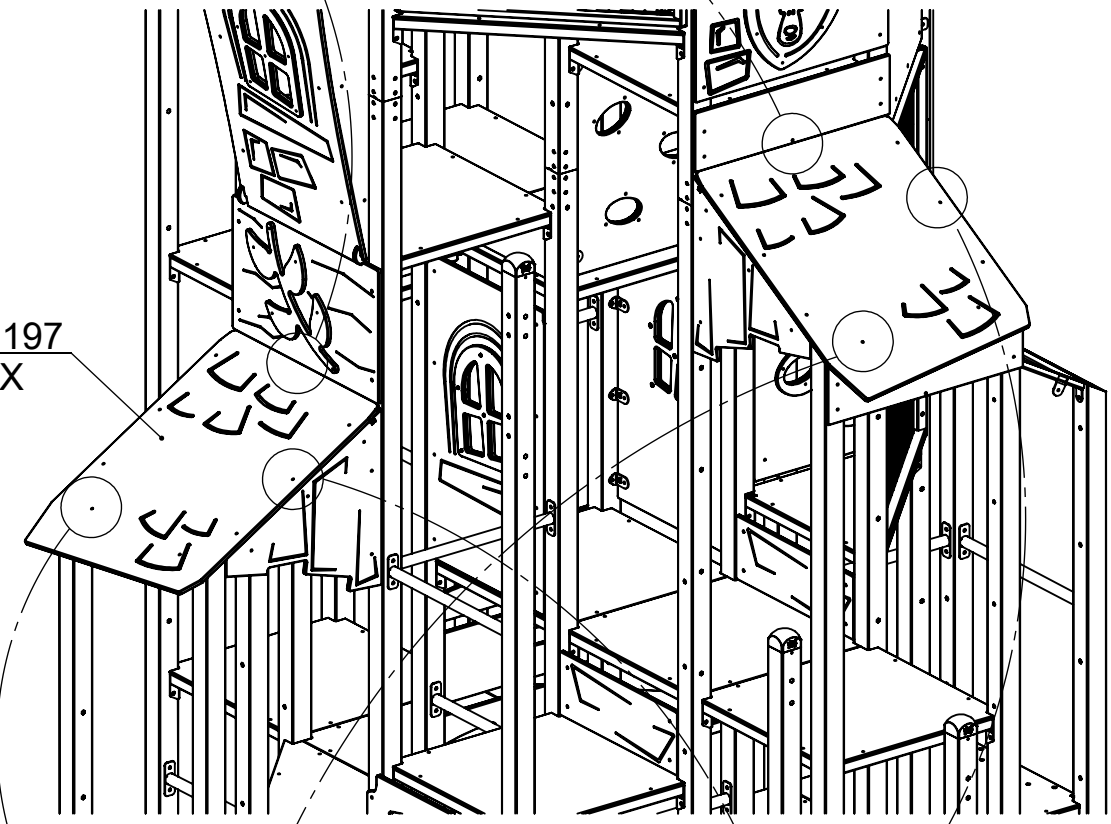

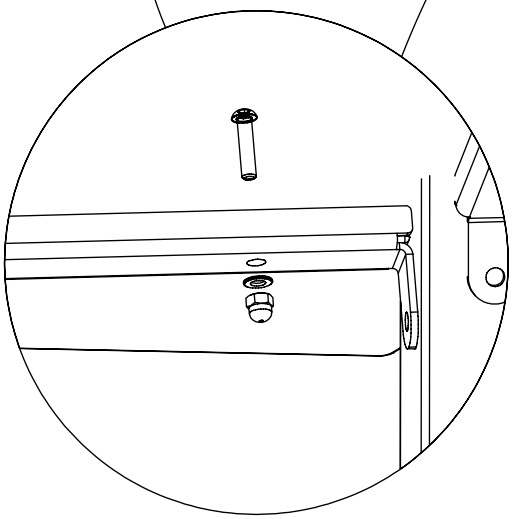

2x 30c068

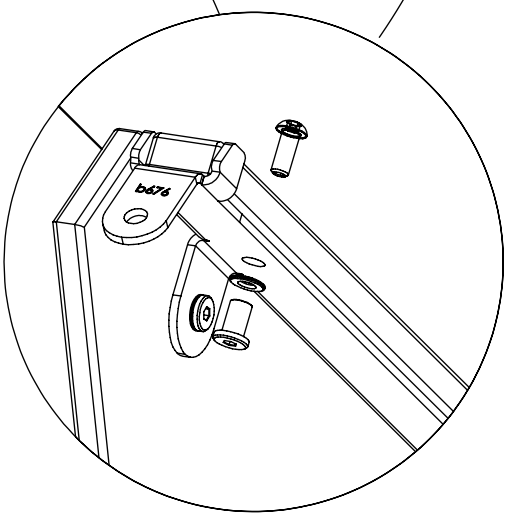

2x 30c070

[cm]

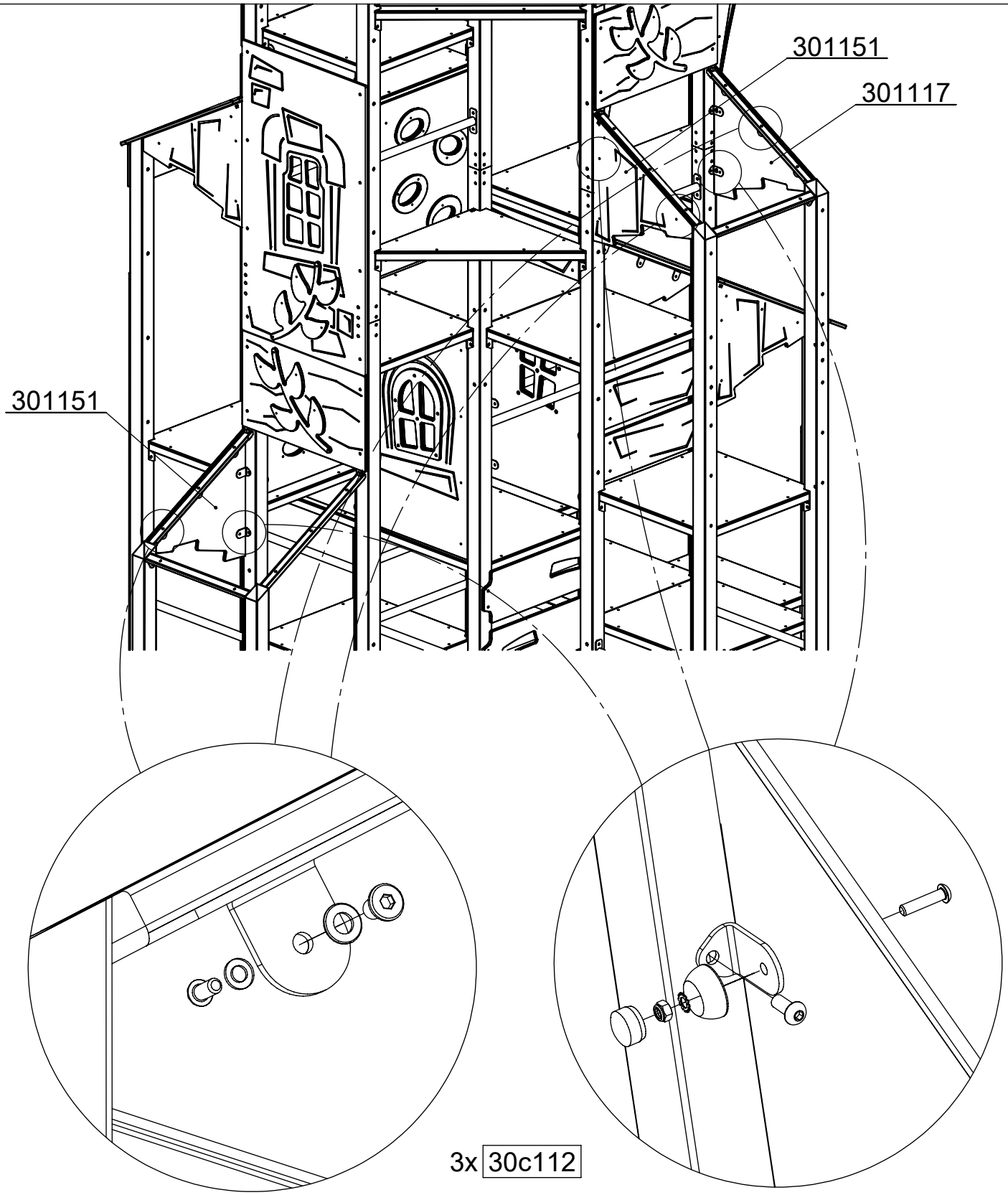

[cm]

vinci play

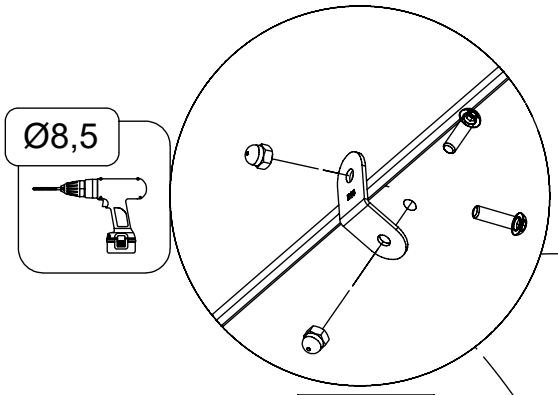

2x 30c124

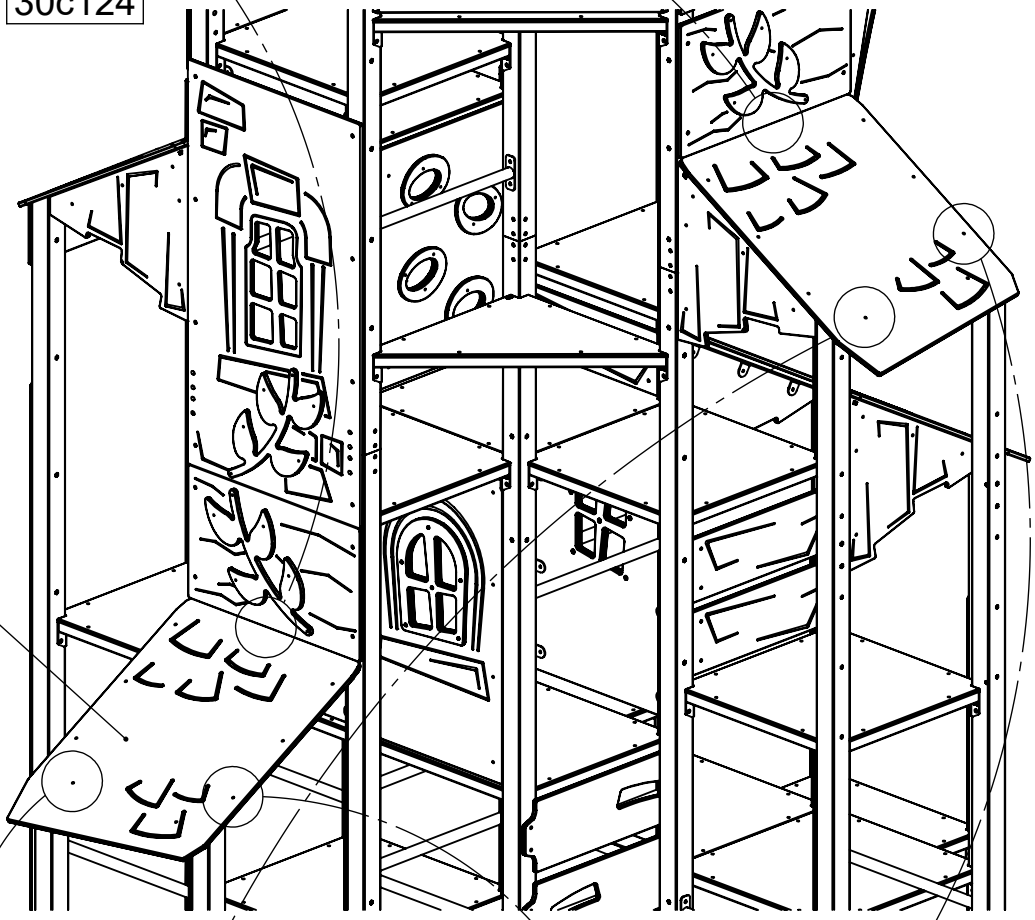

301197
2X

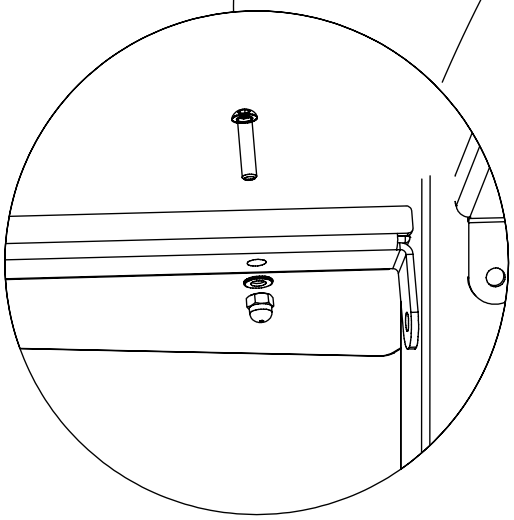

2x 30c068

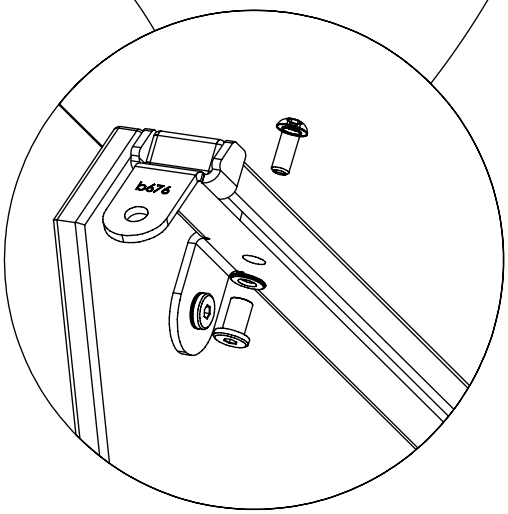

2x 30c070

[cm]

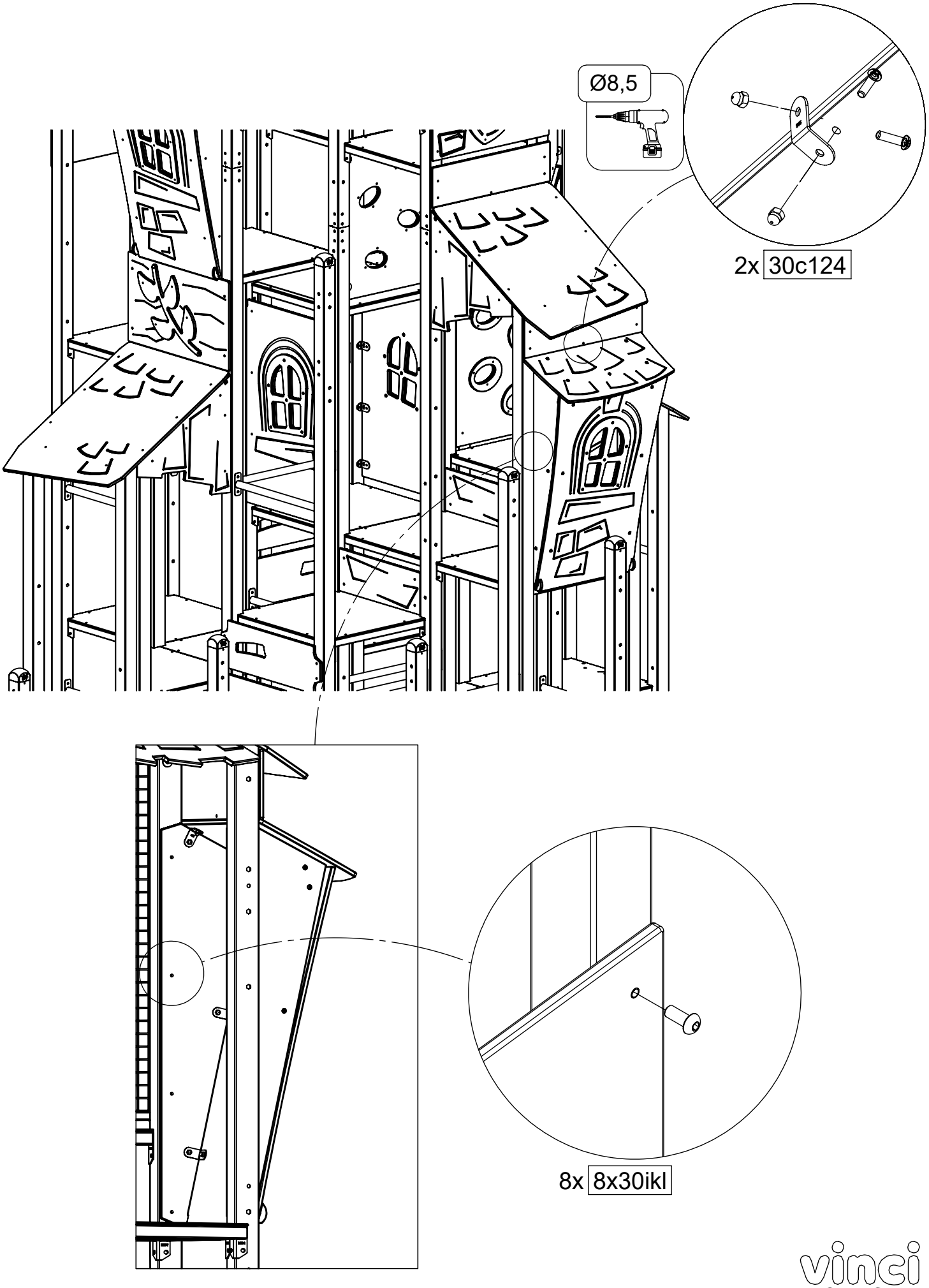
Ø8,5
2x 30c124
8x 8x30ikl
[cm]
vinci play

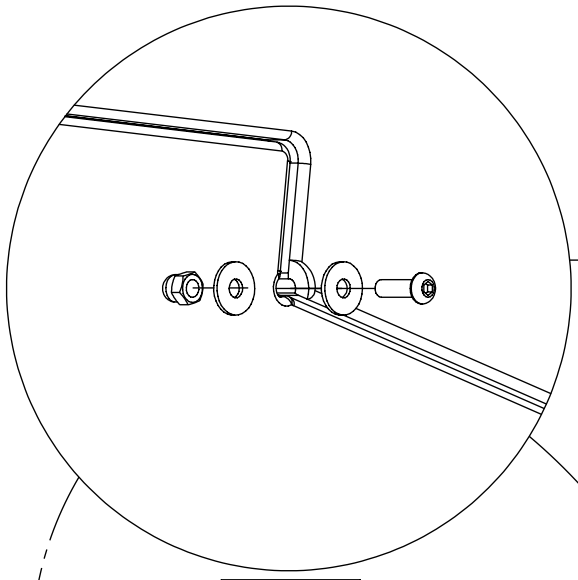

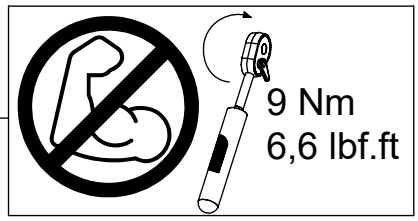

2x 30e057

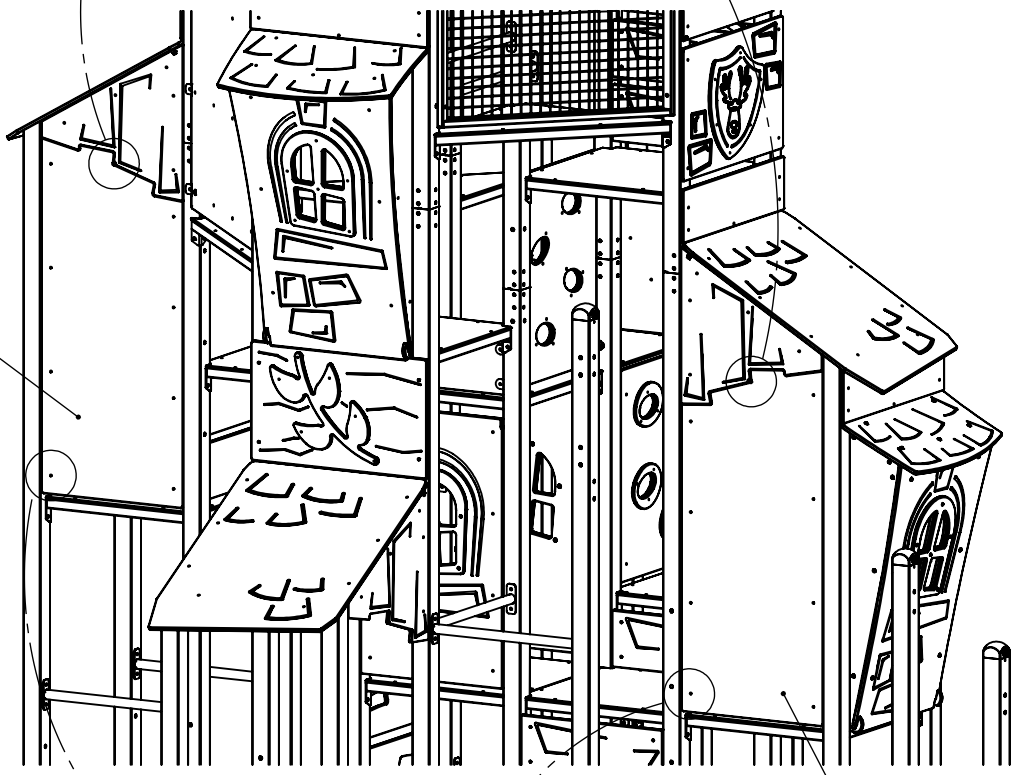

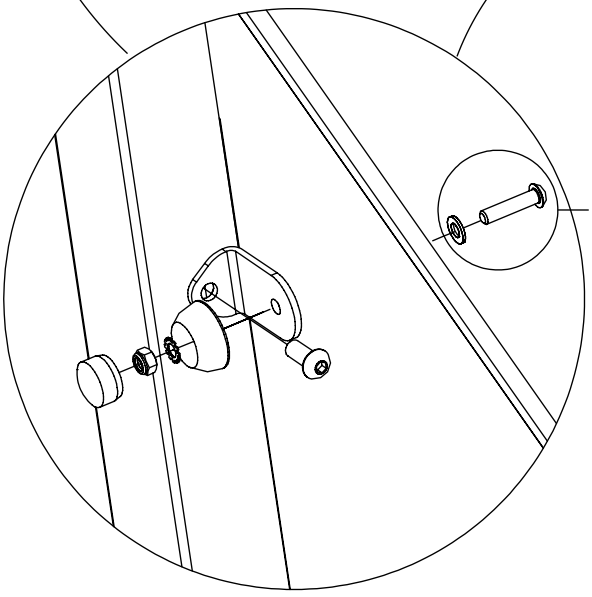

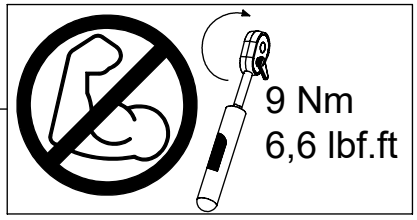

4x 30e056

[cm]

vinci play

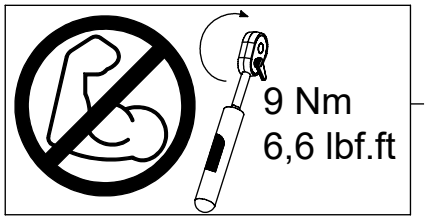

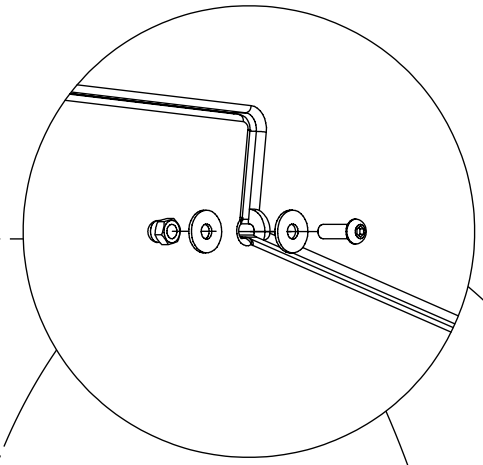

3x 30e057

301174

301176

301173

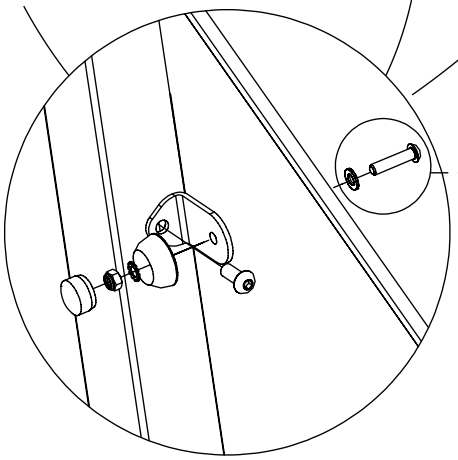

6x 30e056

[cm]

vinci play

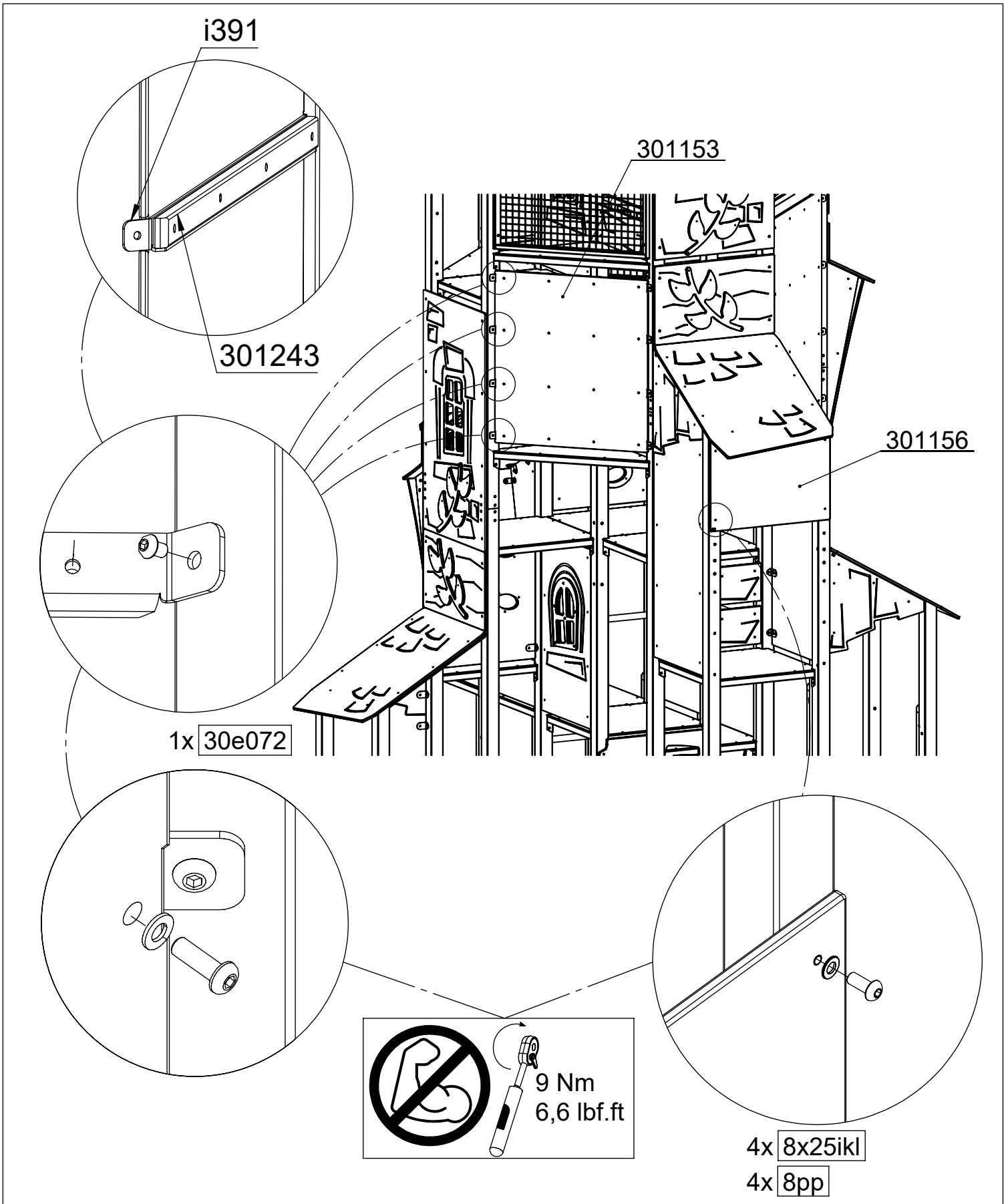
i391
301243
301153
301156
1x 30e072
9 Nm
6,6 lbf.ft
4x 8x25ikl
4x 8pp

[cm]

1

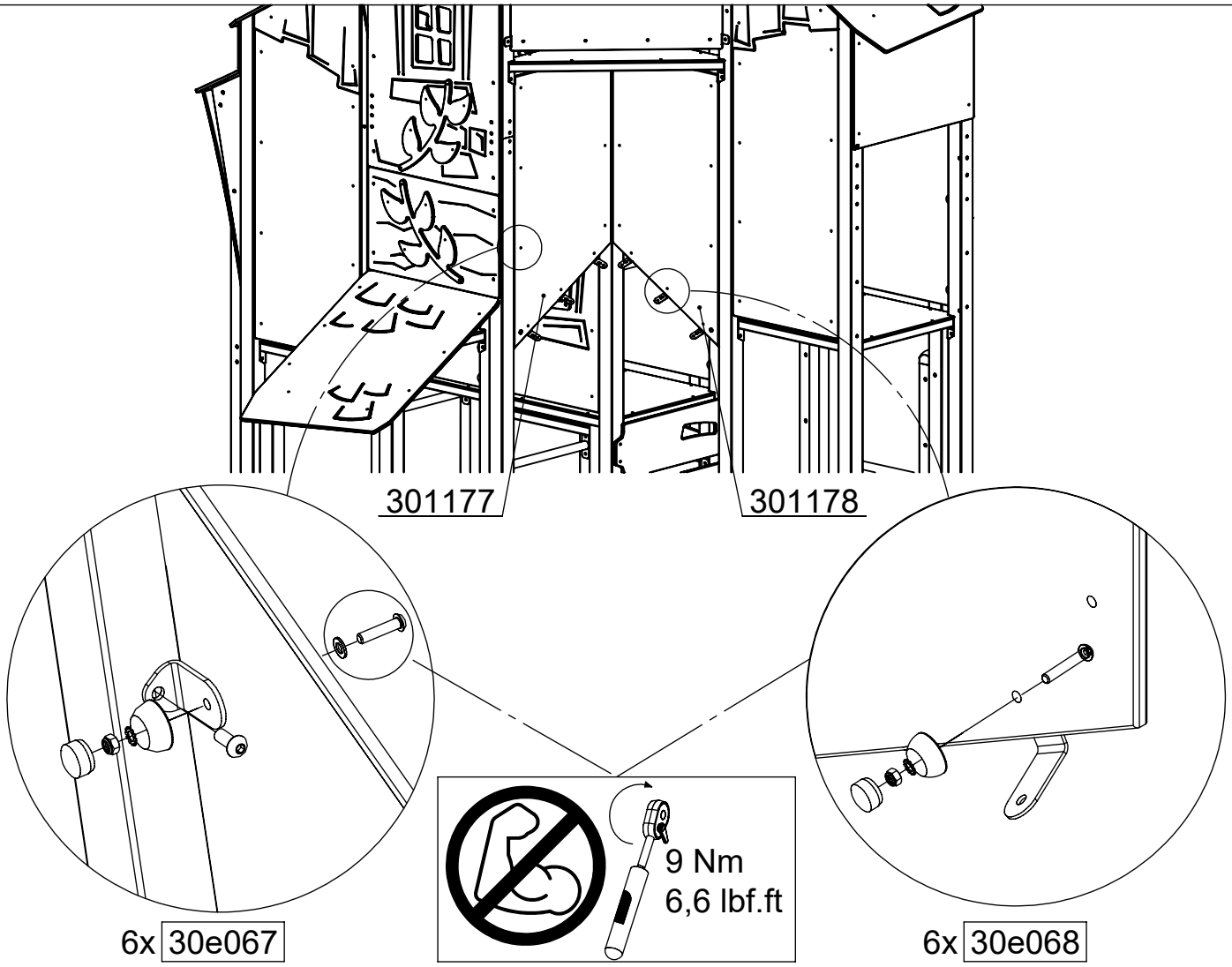

2

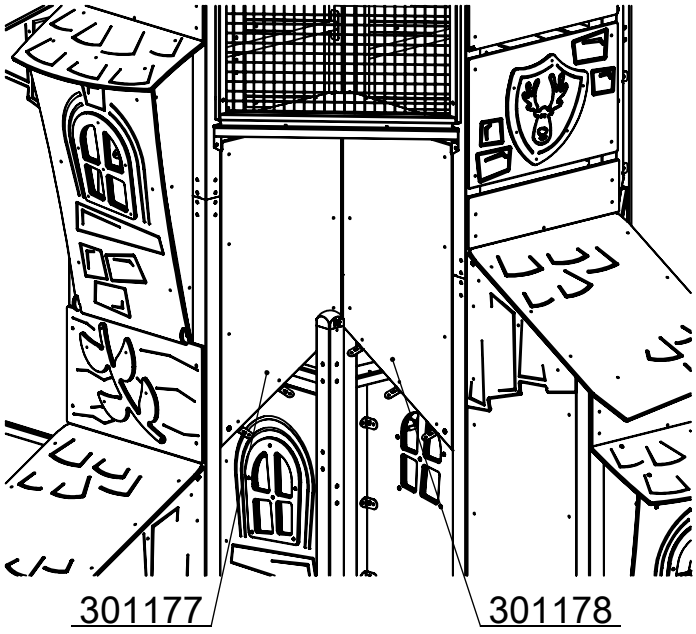

3

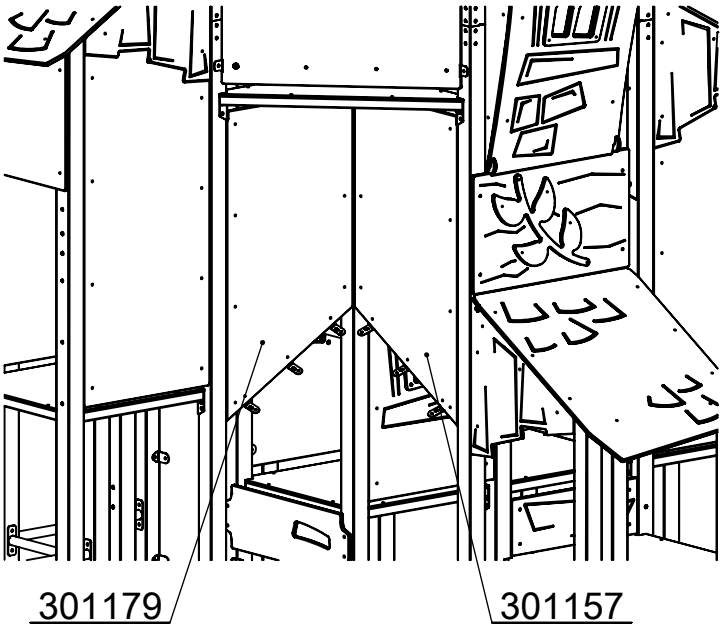

[cm]

vinci play

1

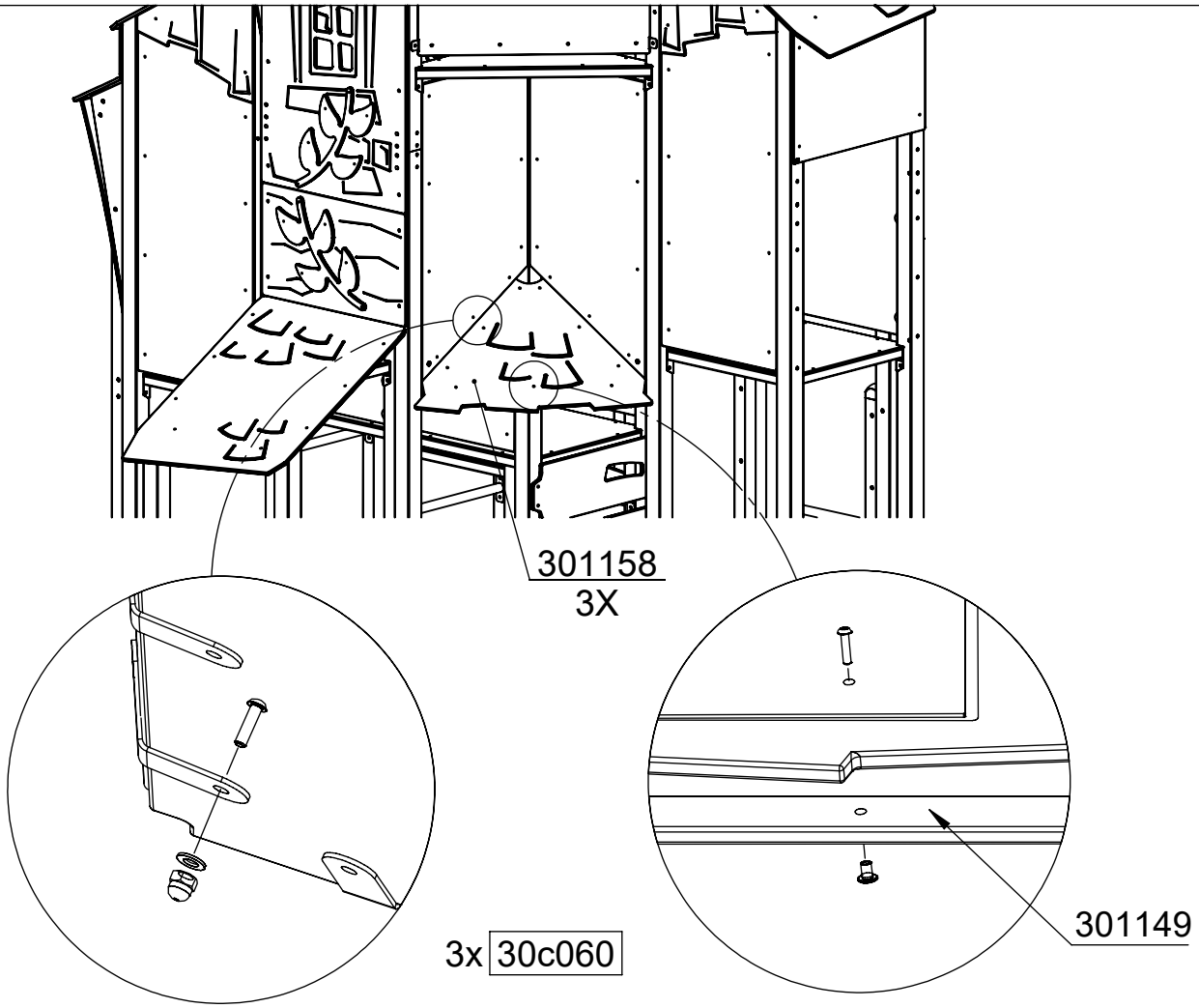

2

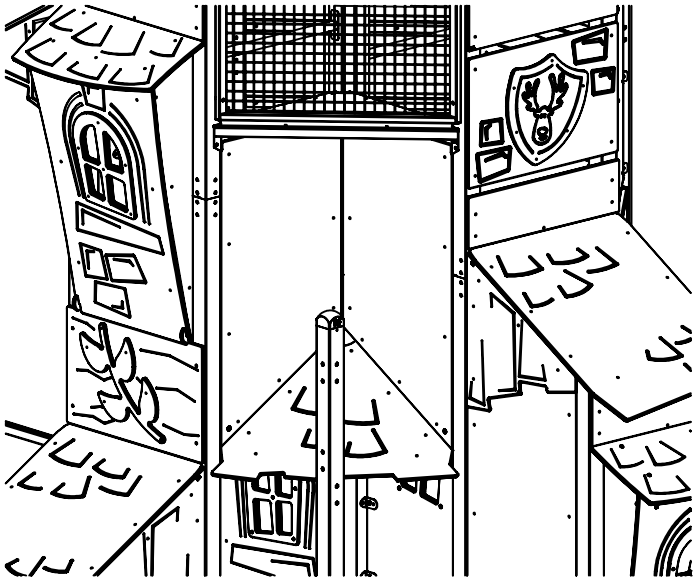

3

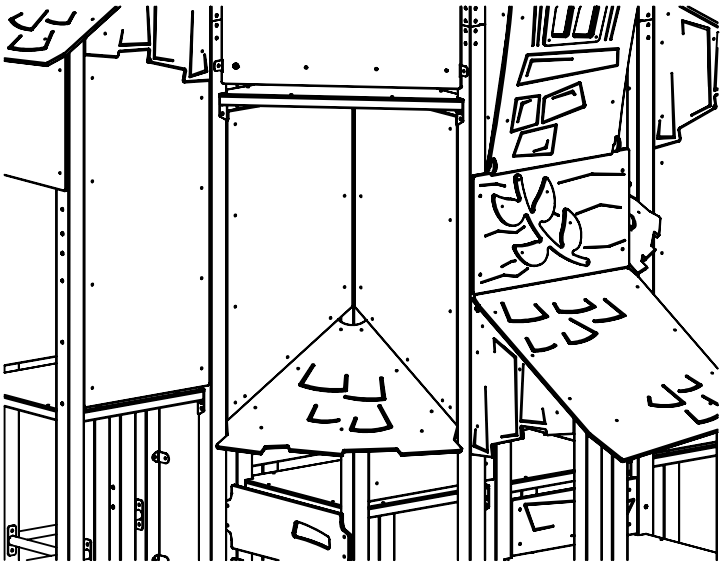

[cm]

vinci play

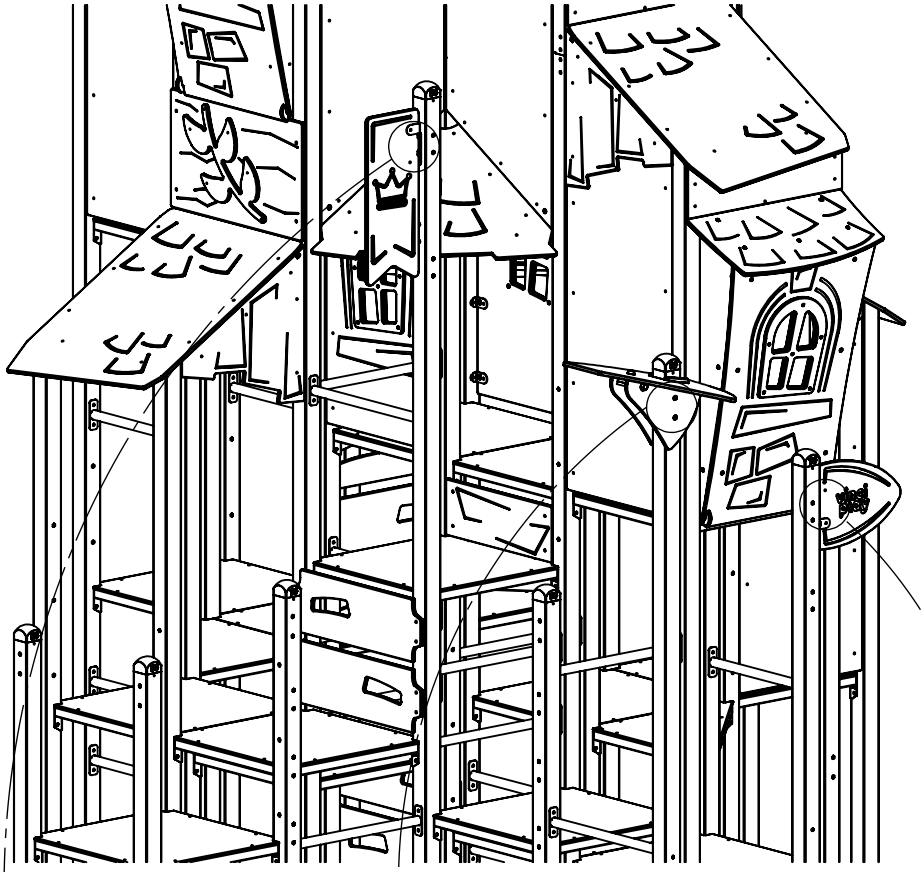

1.

1x E15

2.

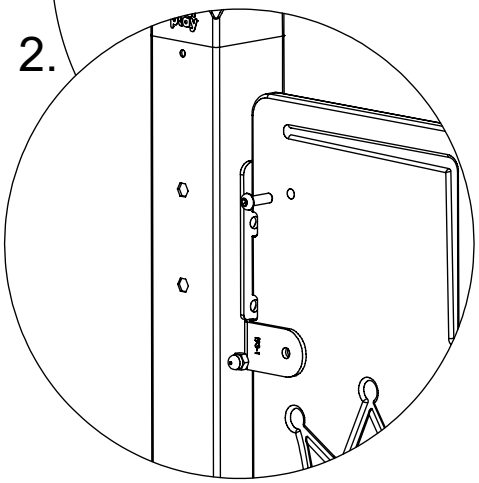

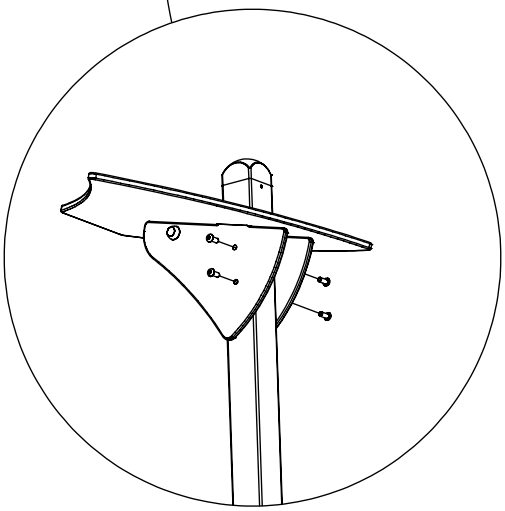

4x 10x25ikl

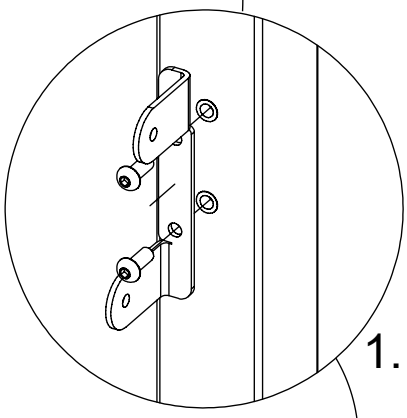

1.

1x E15

2.

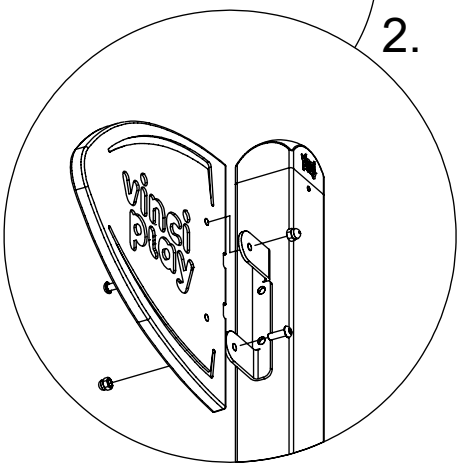

[cm]

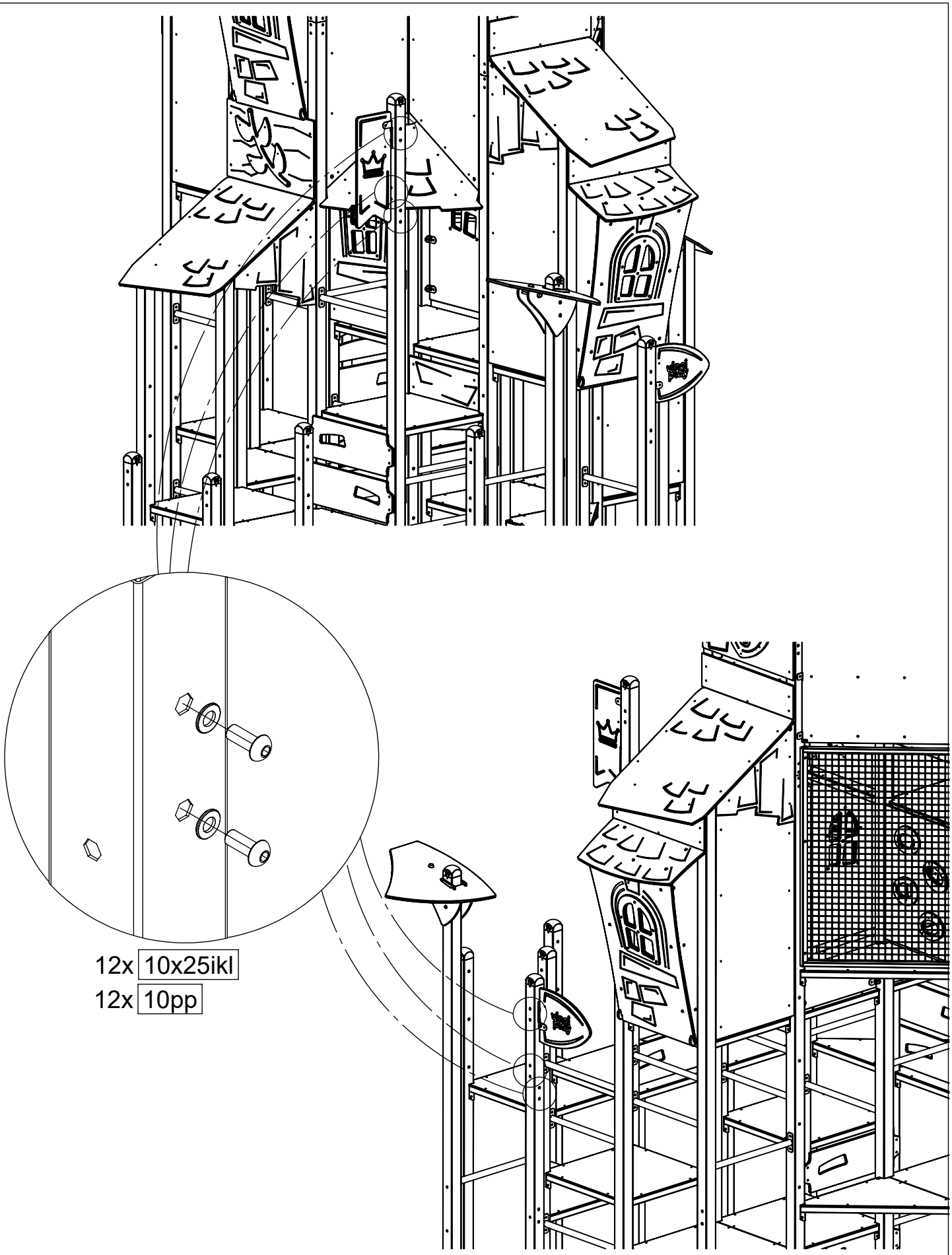

[cm]

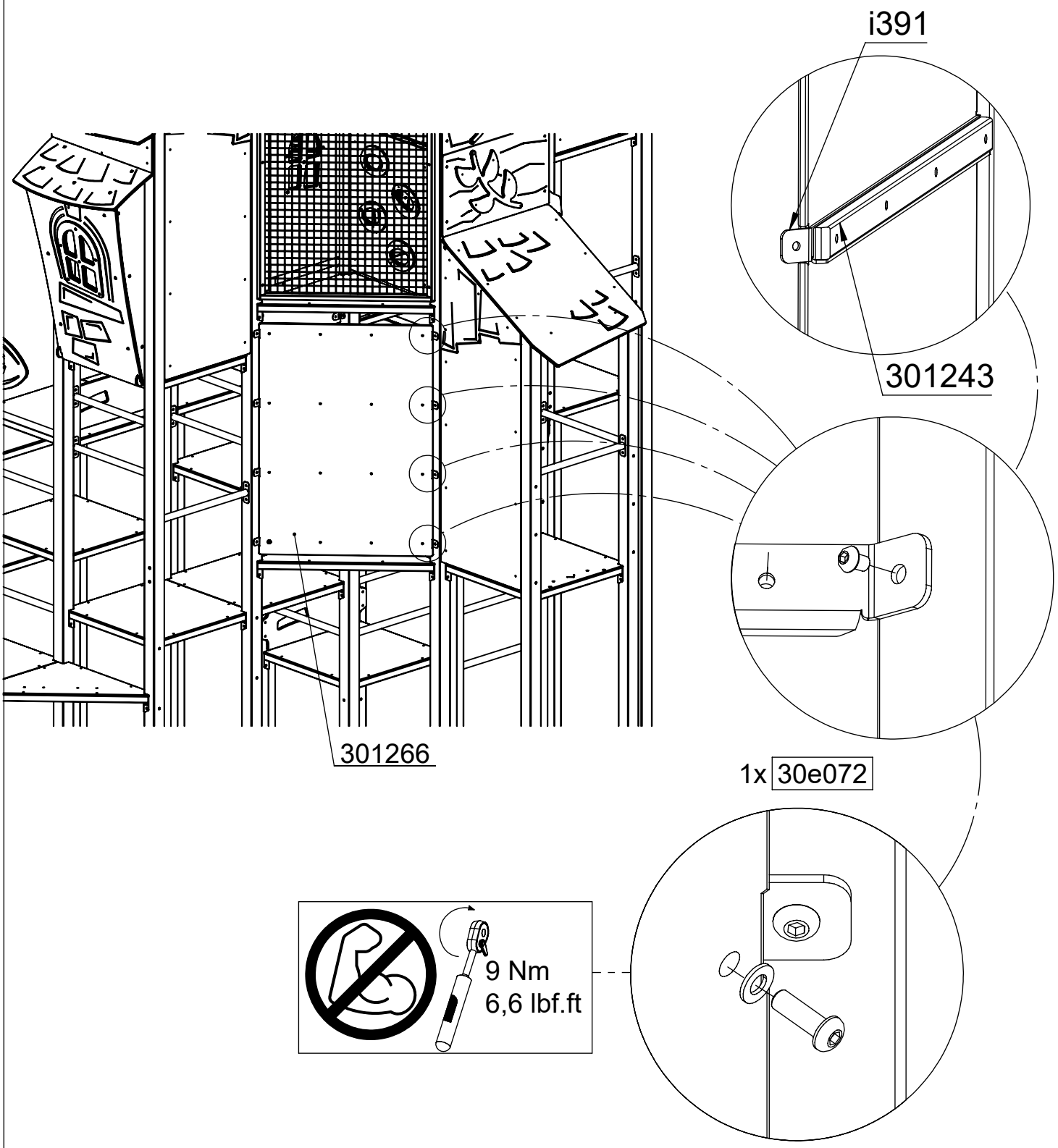

[cm]

vinci play

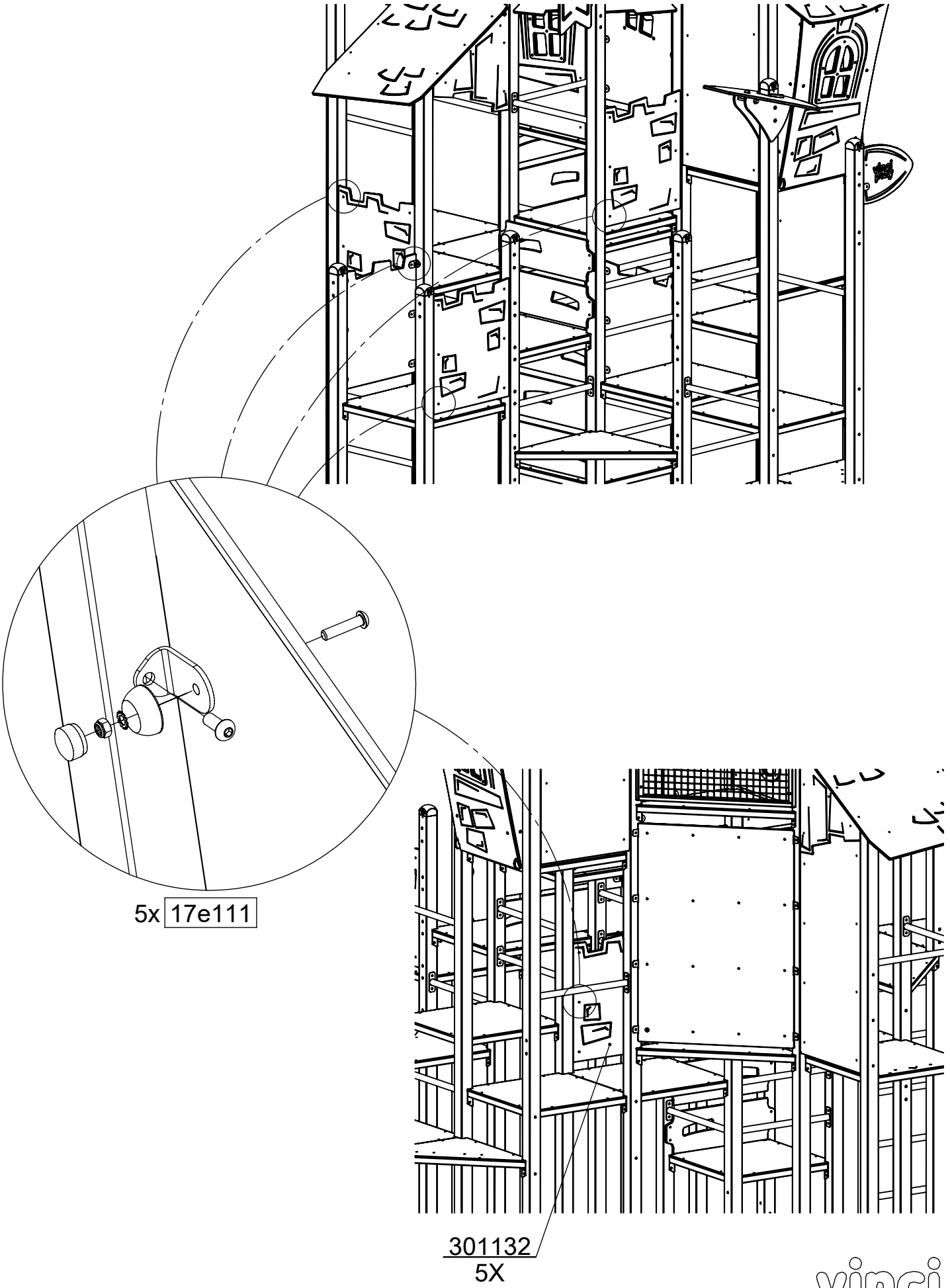

[cm]

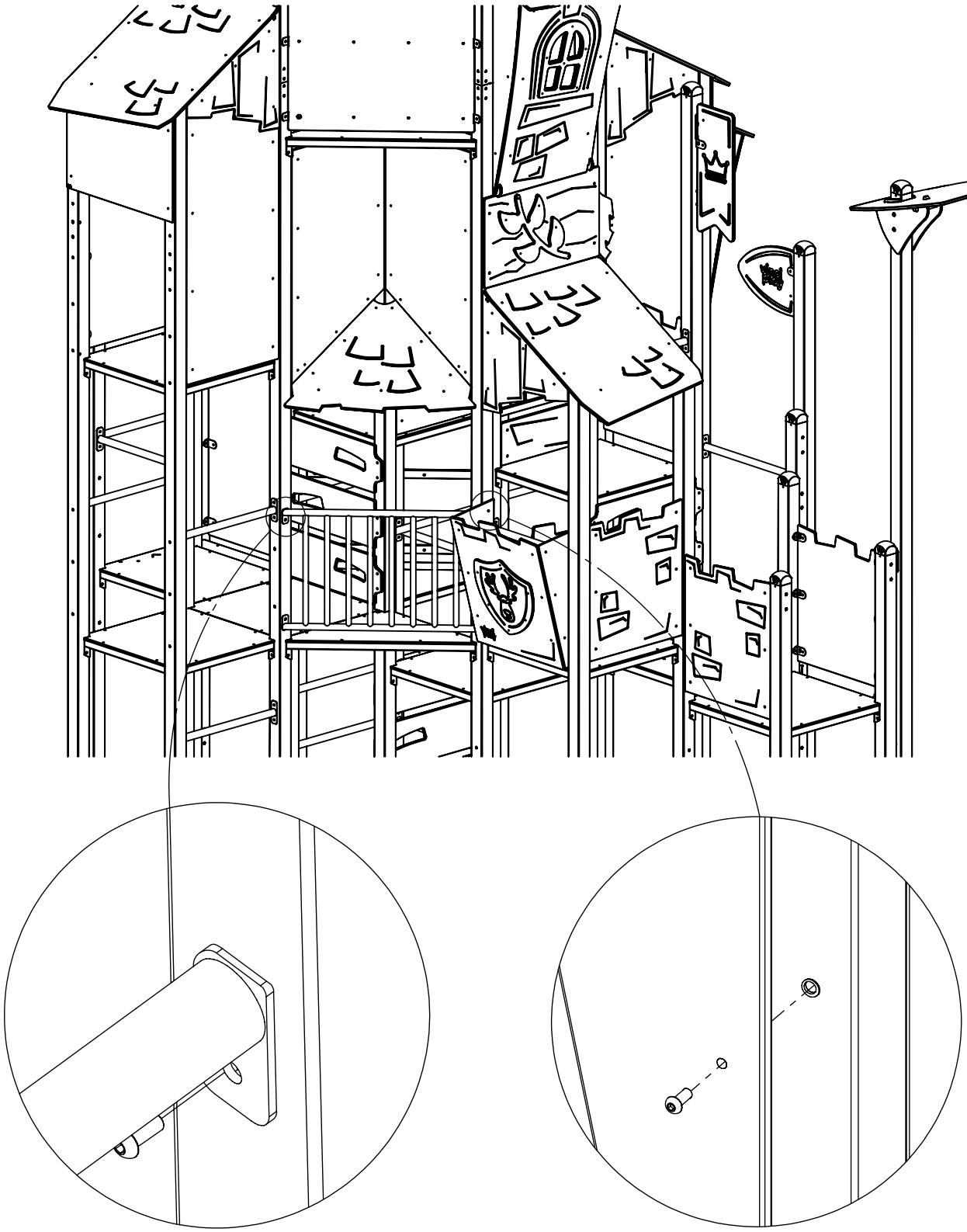

4x 10x25ikl

4x 10x25ikl

[cm]

vinci play

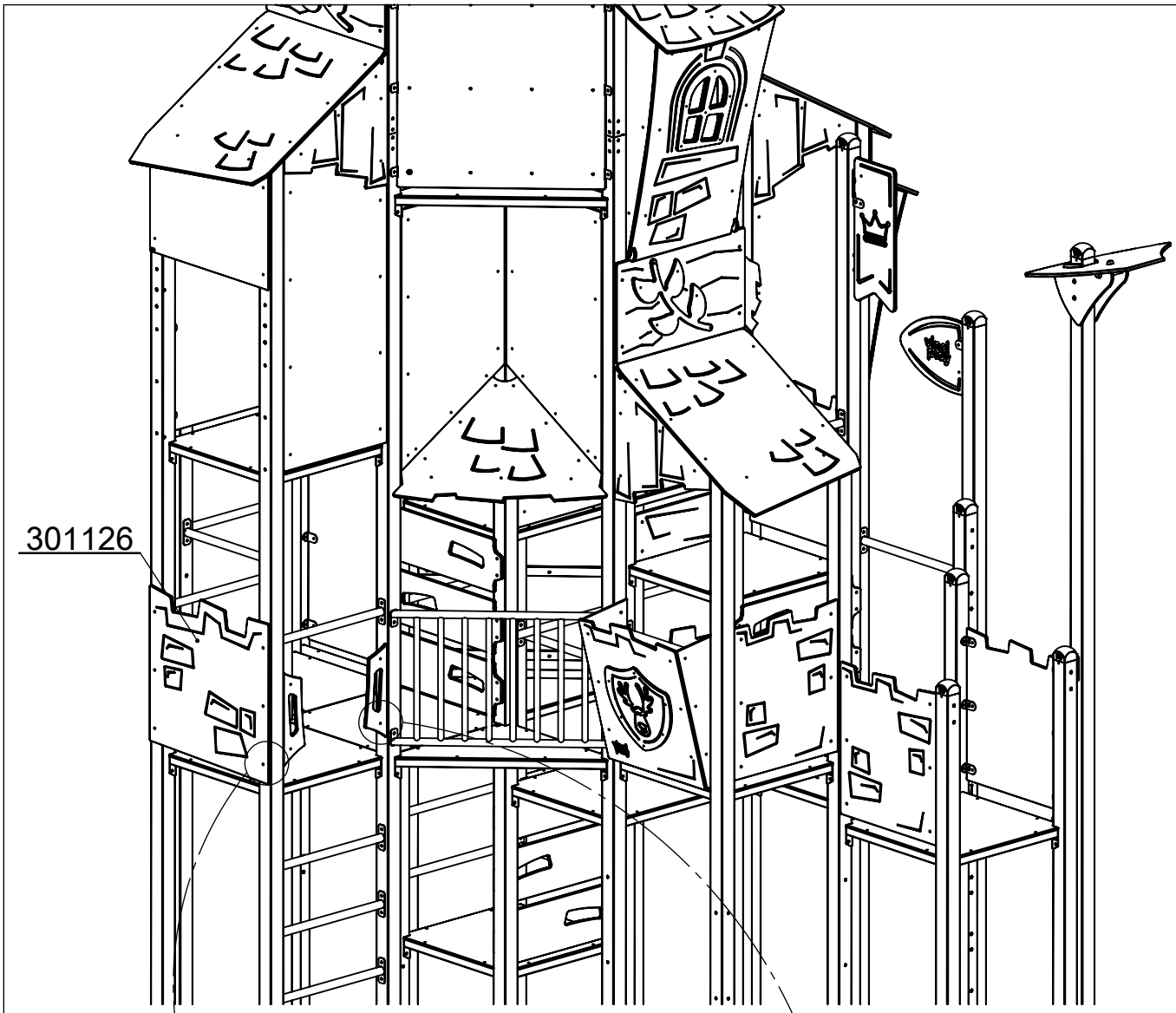

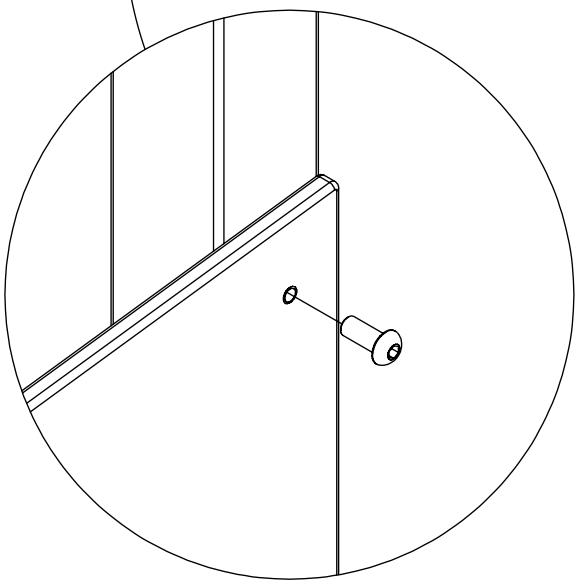

6x 8x25ikl

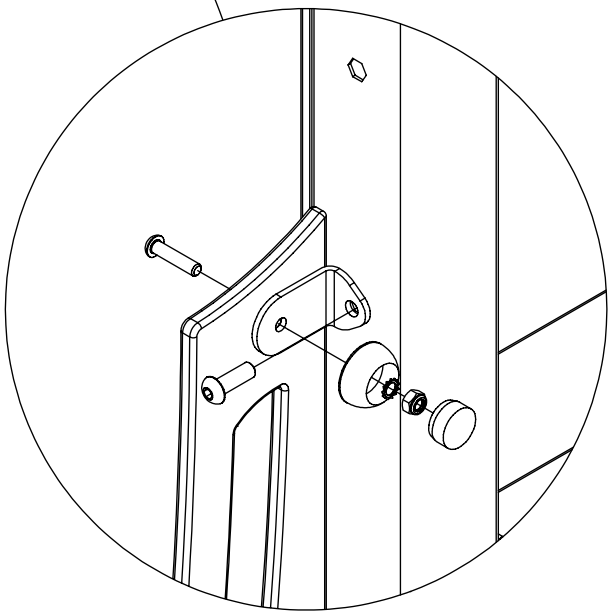

1x 17c004

[cm]

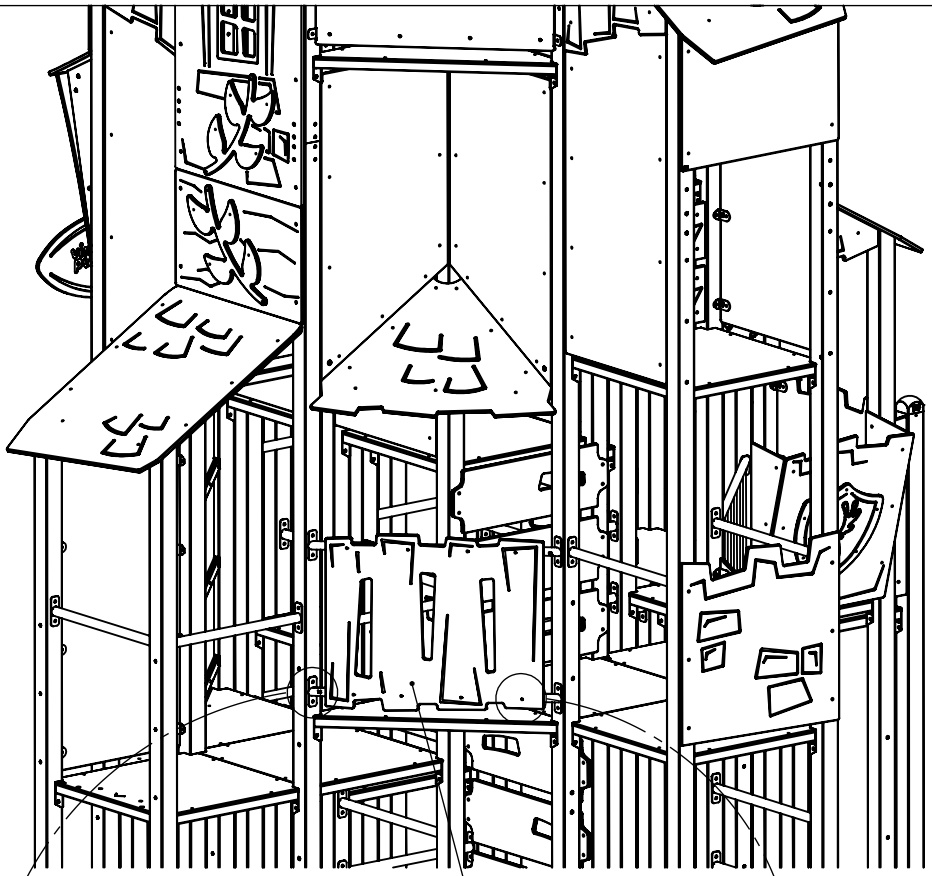

301128

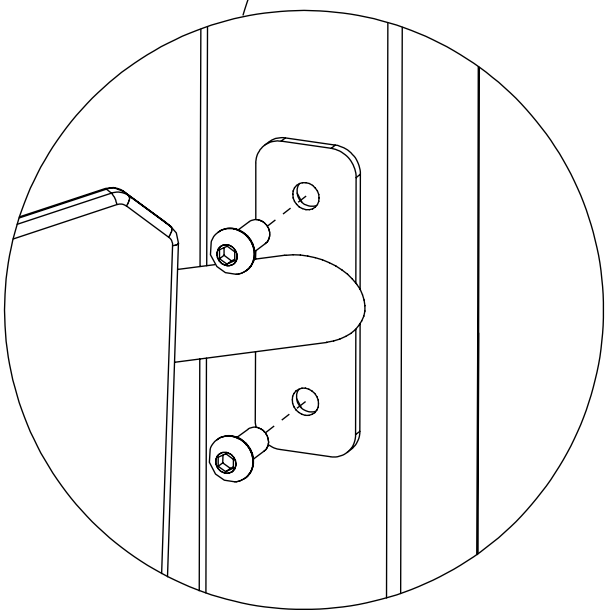

8x 10x25ikl

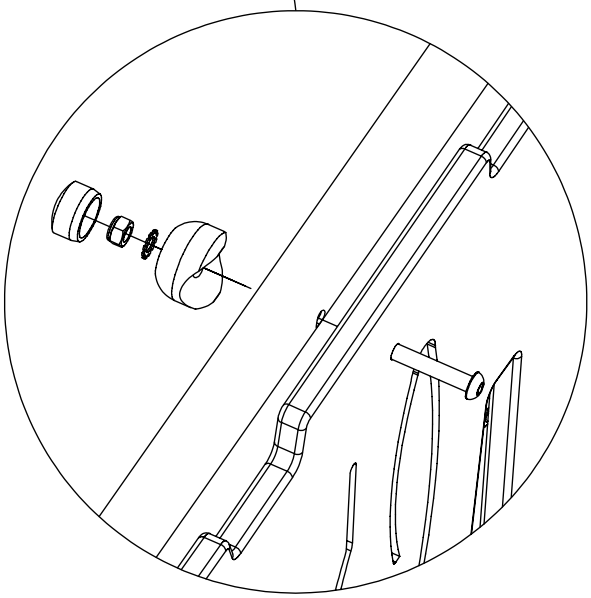

1x 30c006

[cm]

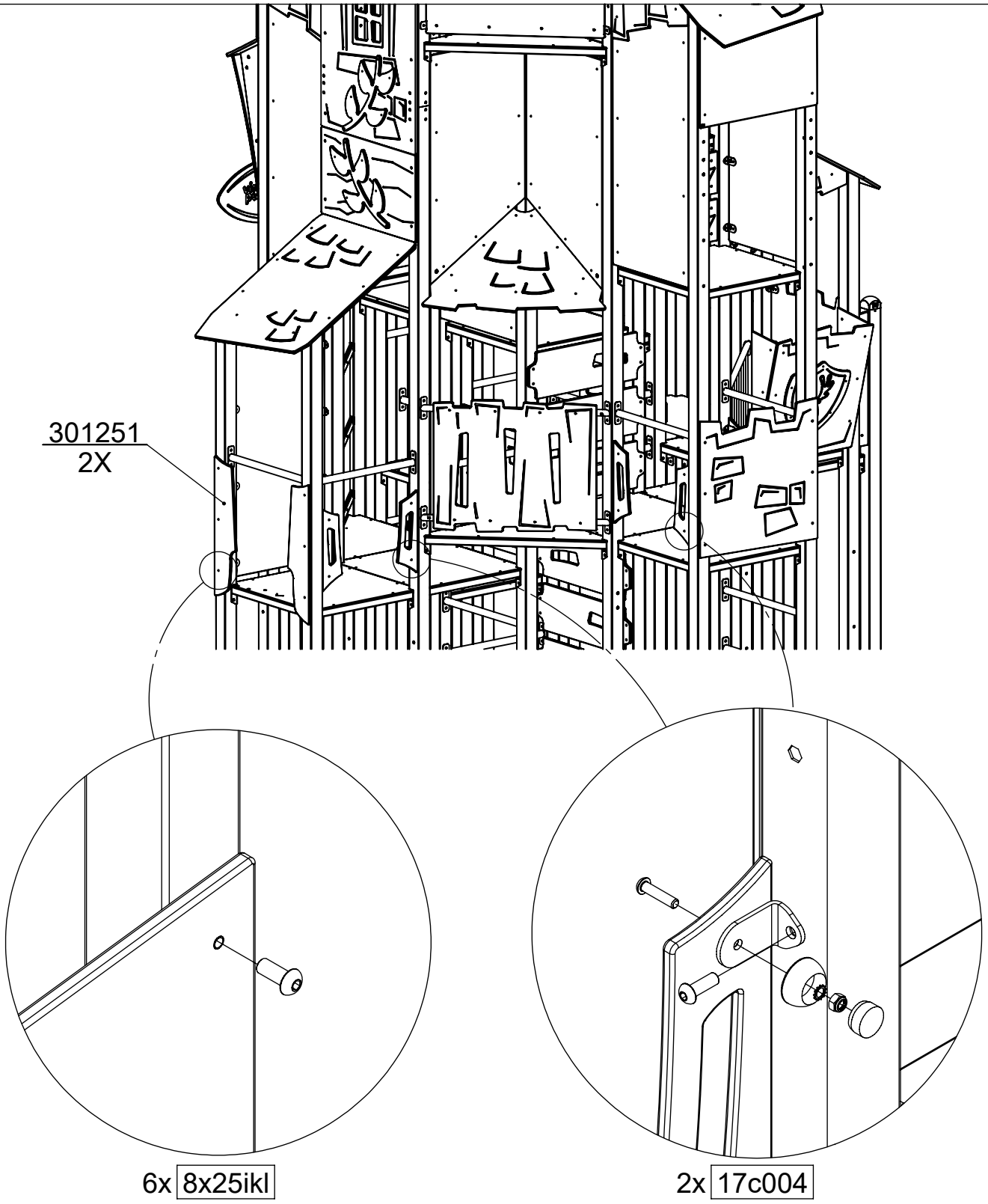

[cm]

vinci play

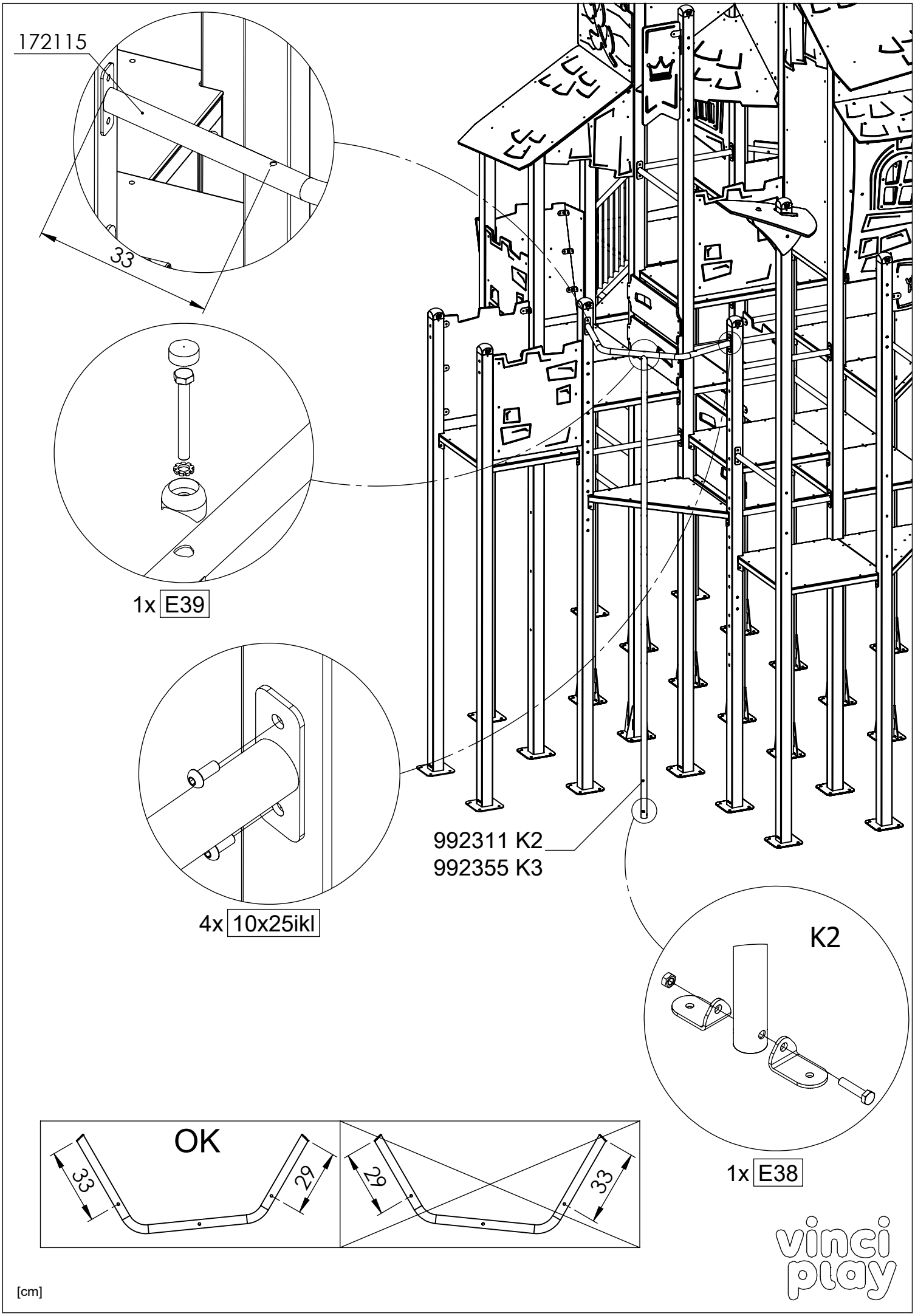
172115
33
1x E39
4x 10x25ikl
992311 K2
992355 K3
K2
1x E38
OK
33
29
29
33
[cm]
vinci play

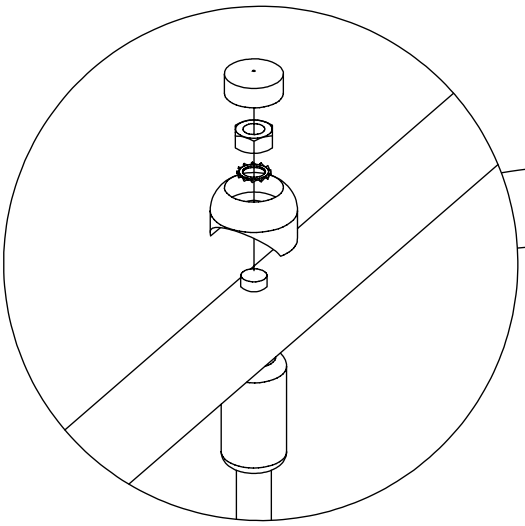

1x 30e016
1x 30e019

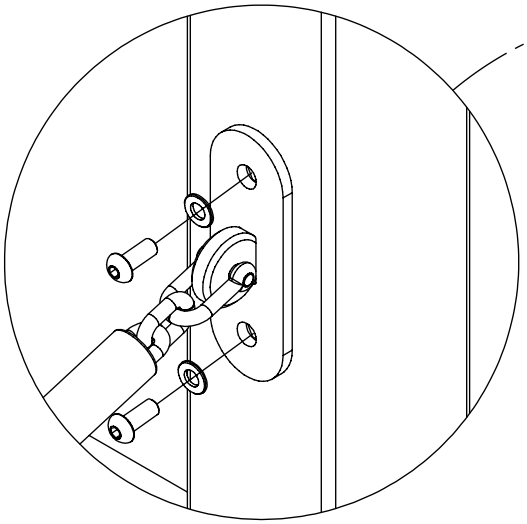

1x 30e075
26x 10x25ikl
26x 10pp

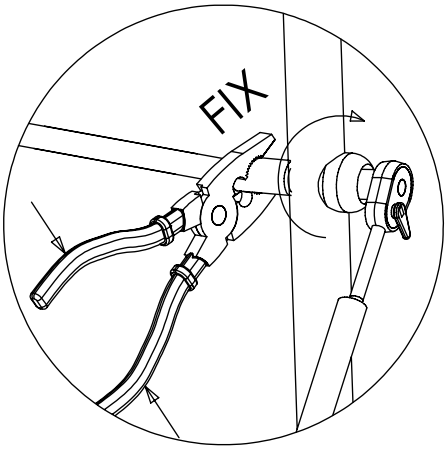

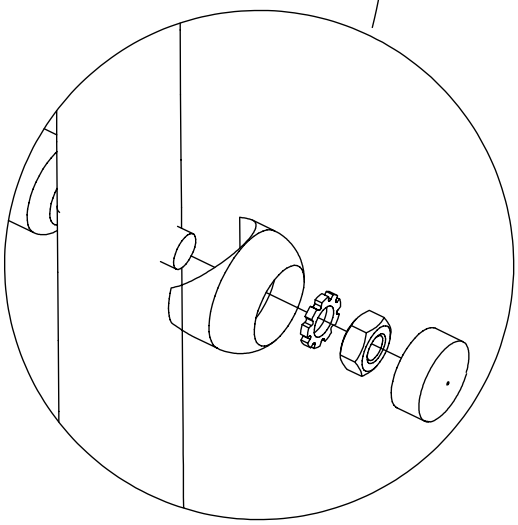

30e016
30e019

[cm]

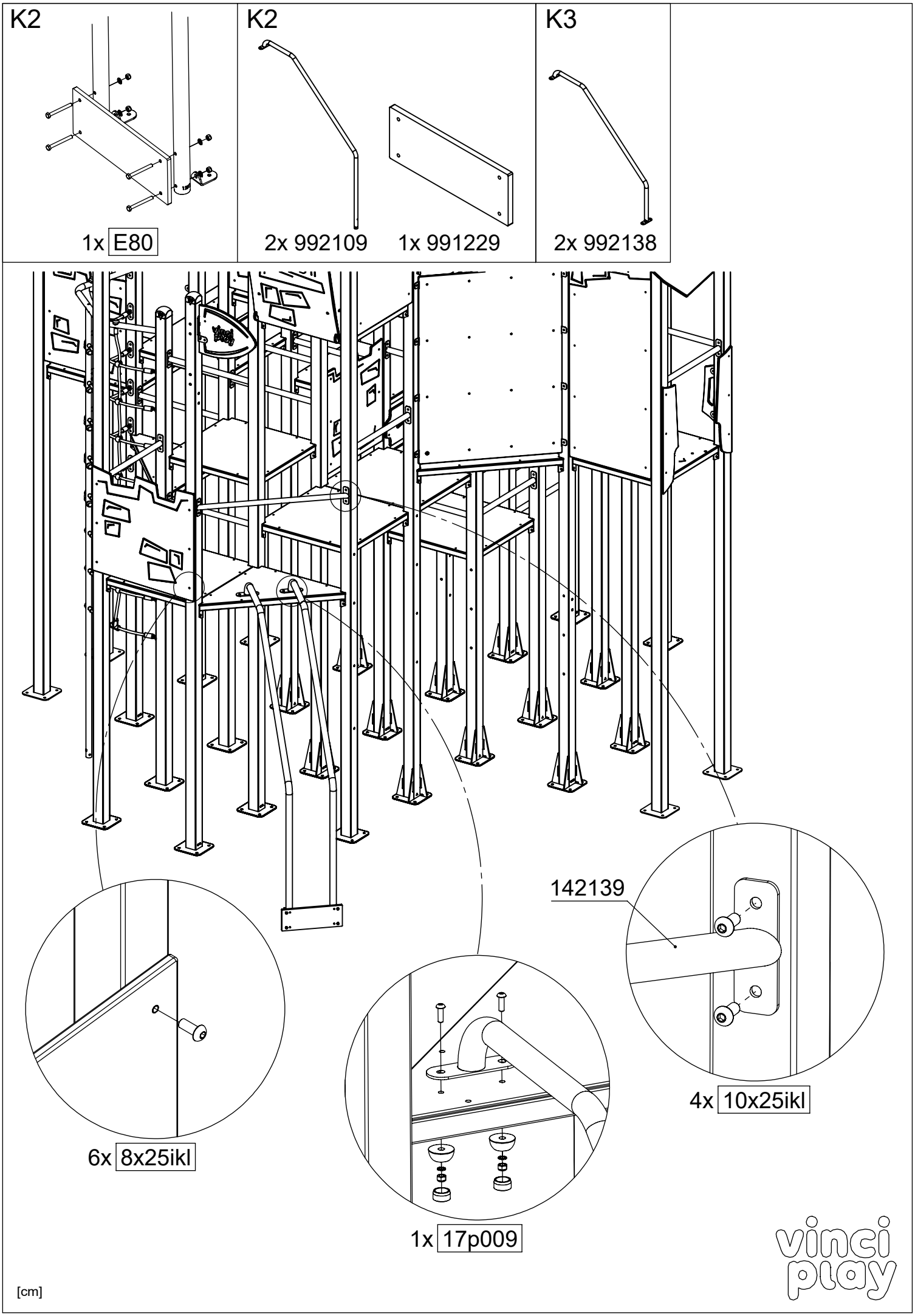
K2
1x E80
K2
2x 992109
1x 991229
K3
2x 992138
142139
4x 10x25ikl
6x 8x25ikl
1x 17p009
[cm]
vinci play

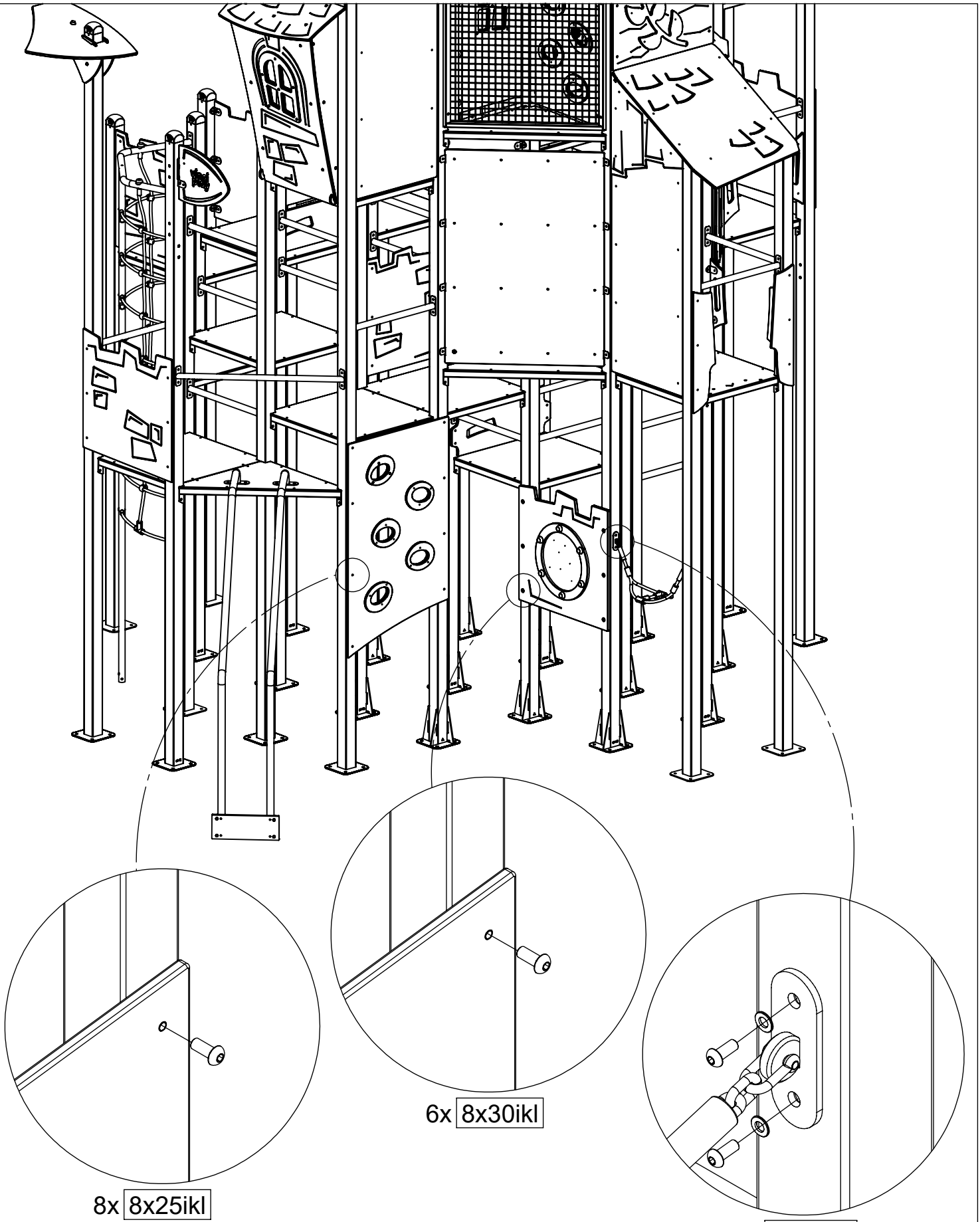

[cm]

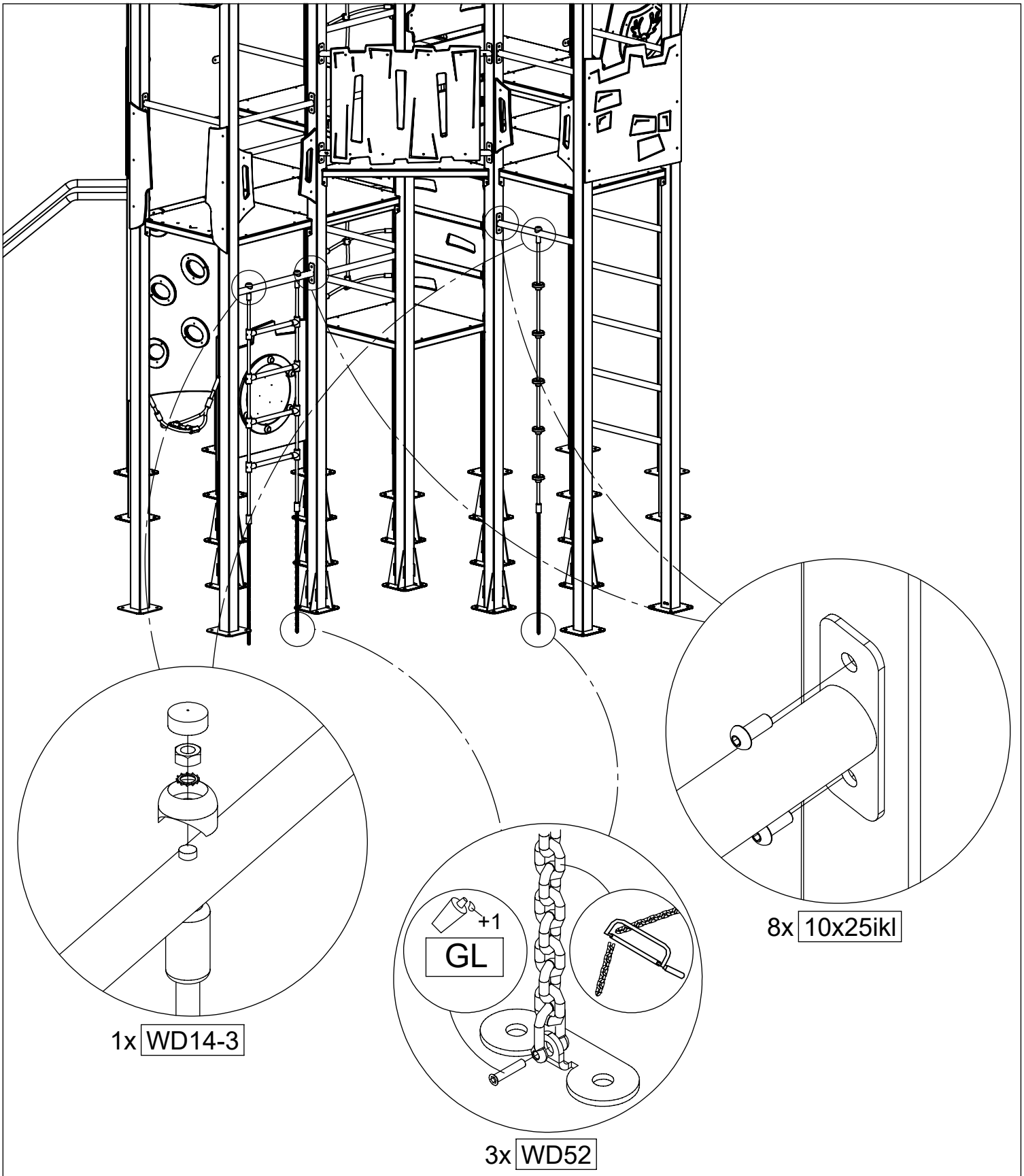

[cm]

vinci play

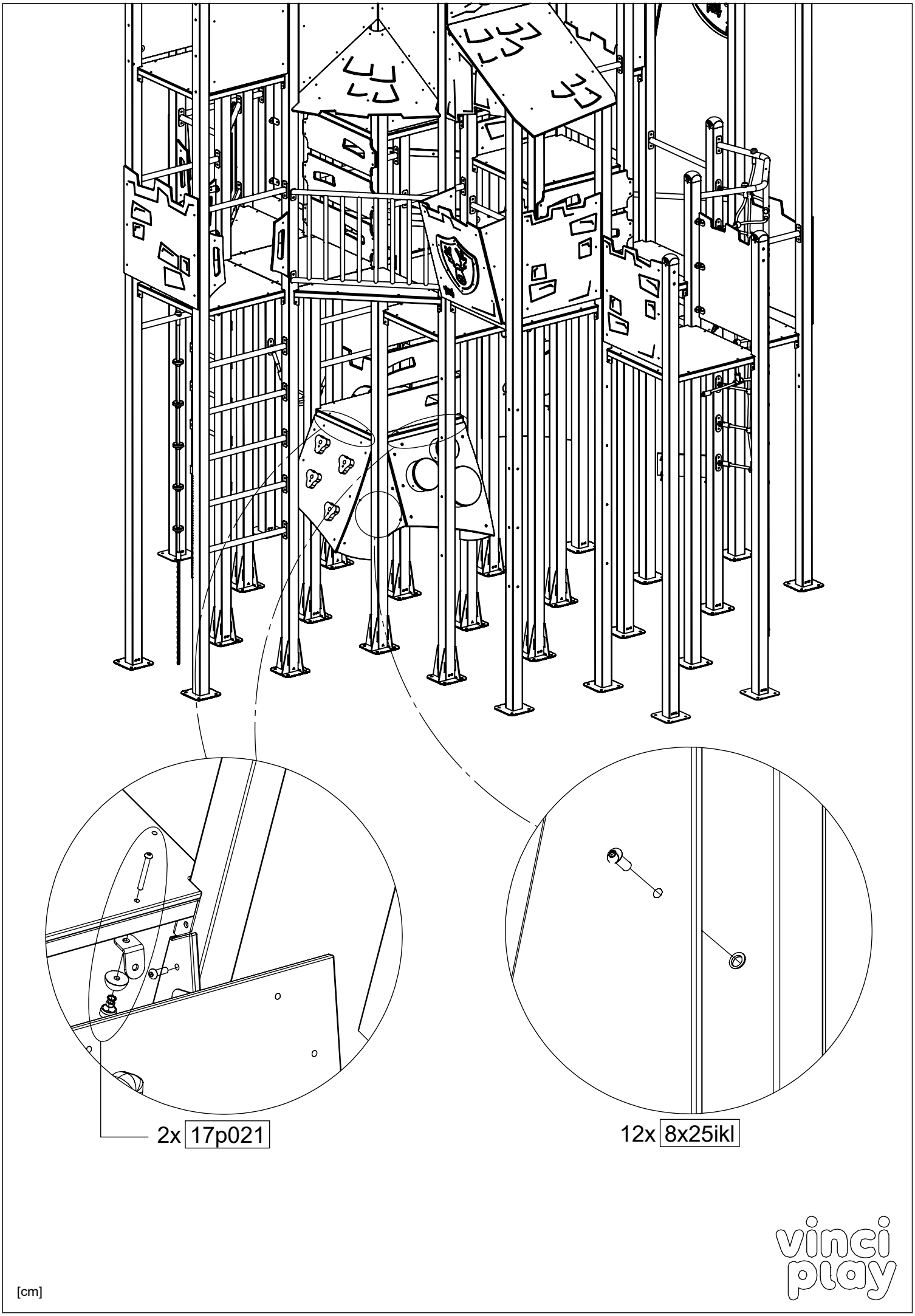
2x 17p021
12x 8x25ikl
[cm]
vinci play

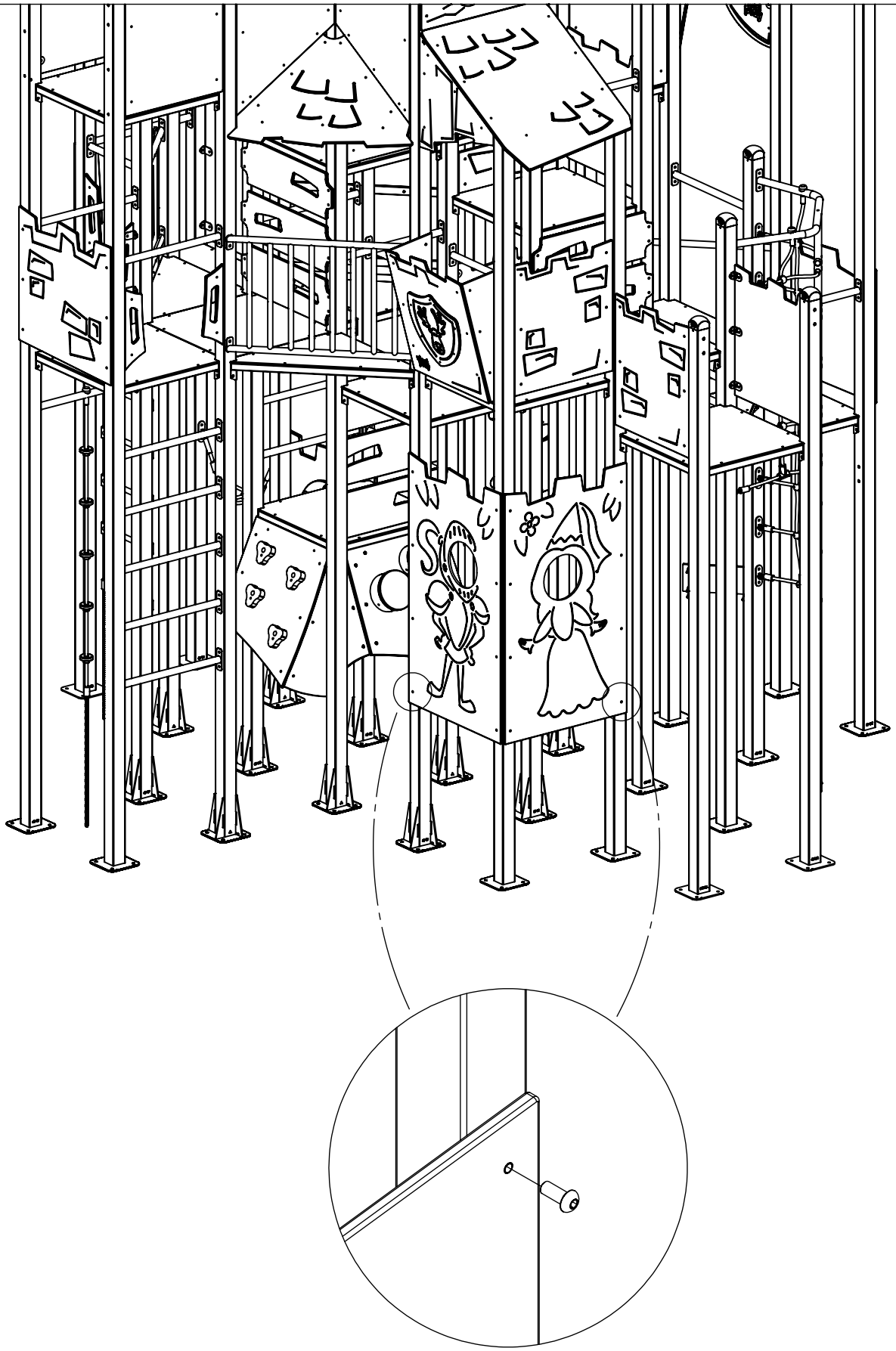

16x 8x25ikl

[cm]

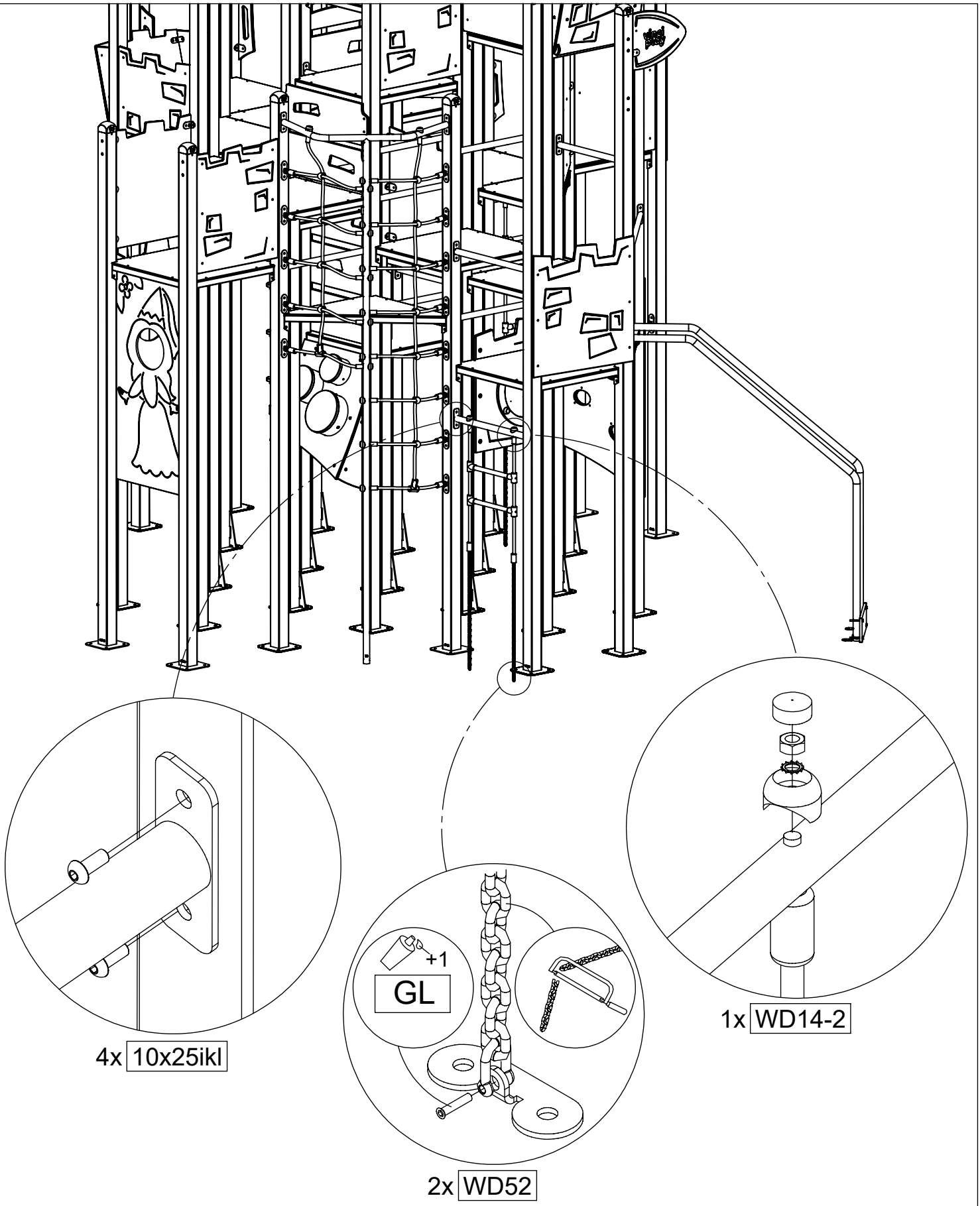

[cm]

vinci play

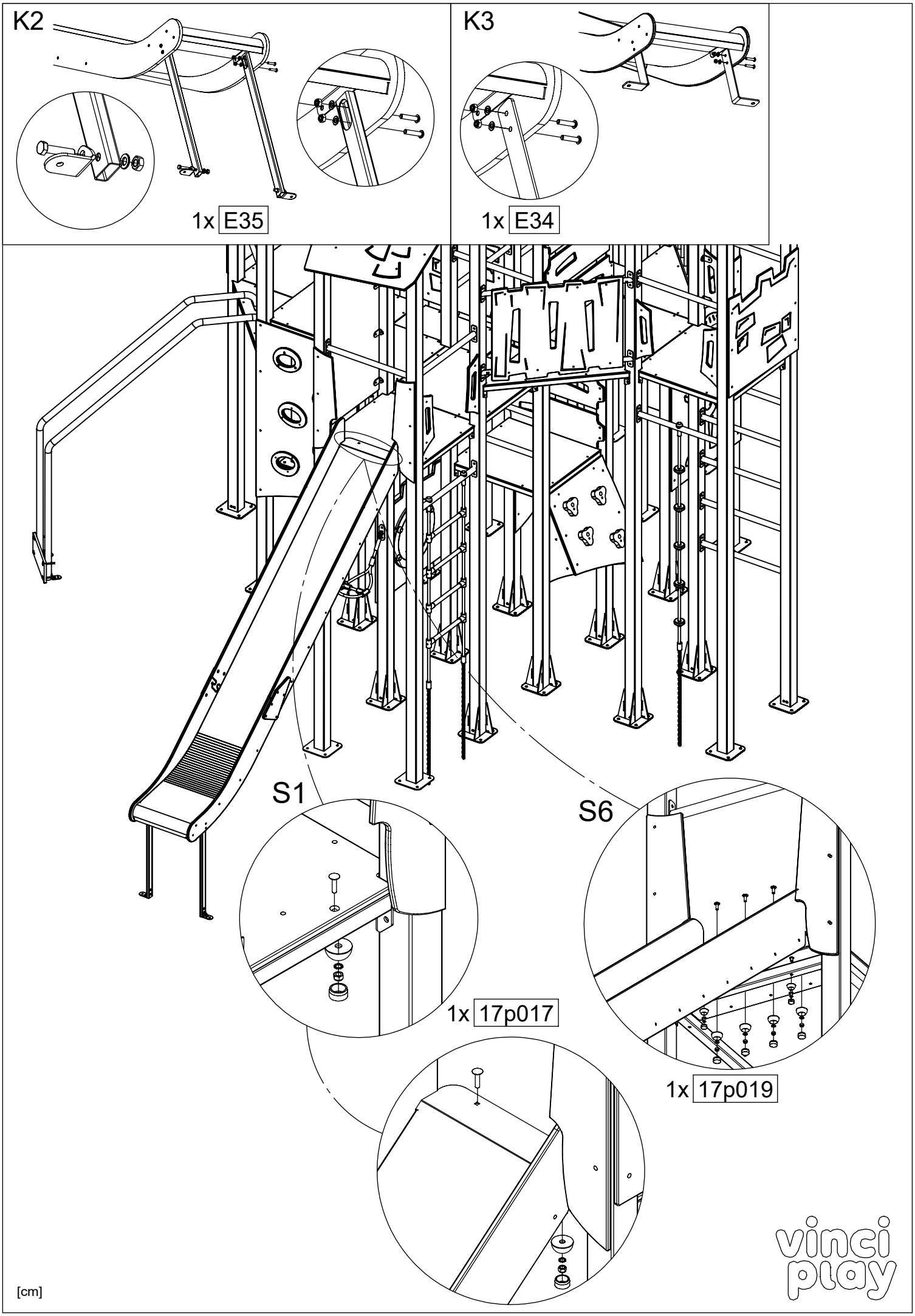
K2
1x E35
K3
1x E34
S1
1x 17p017
S6
1x 17p019
[cm]
vinci play

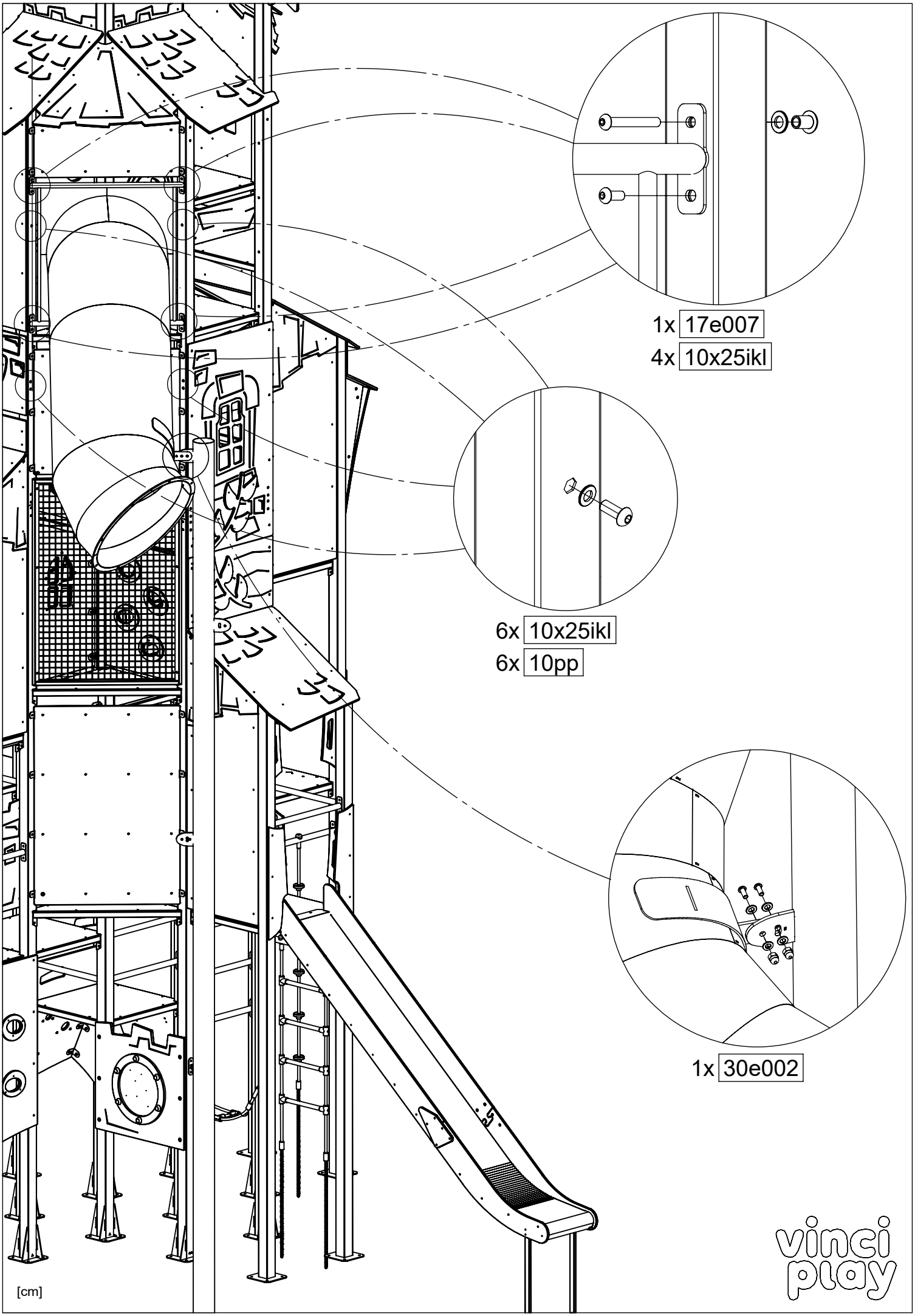
1x 17e007
4x 10x25ikl
6x 10x25ikl
6x 10pp
1x 30e002
[cm]
vinci play

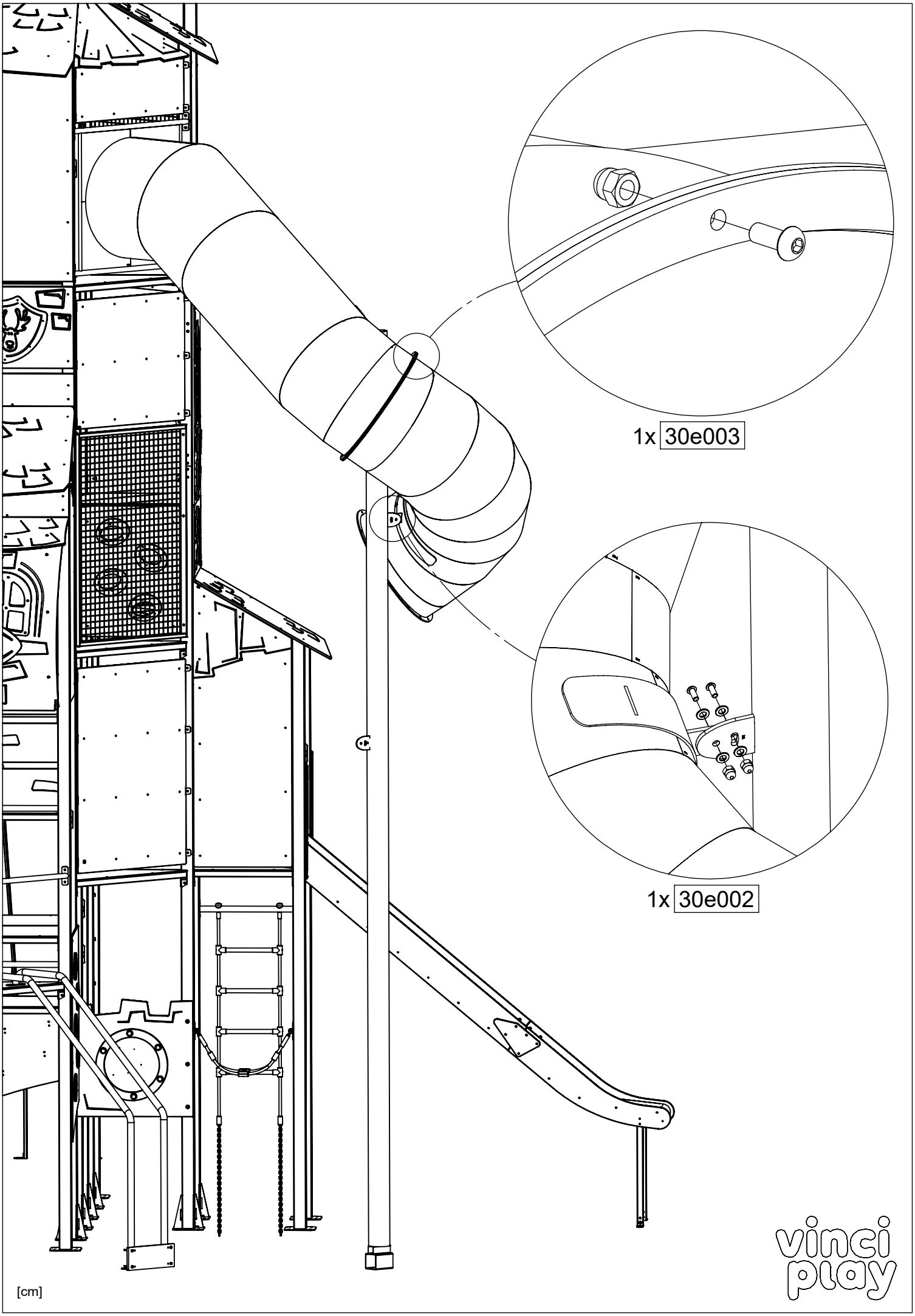
1x 30e003
1x 30e002
[cm]
vinci play

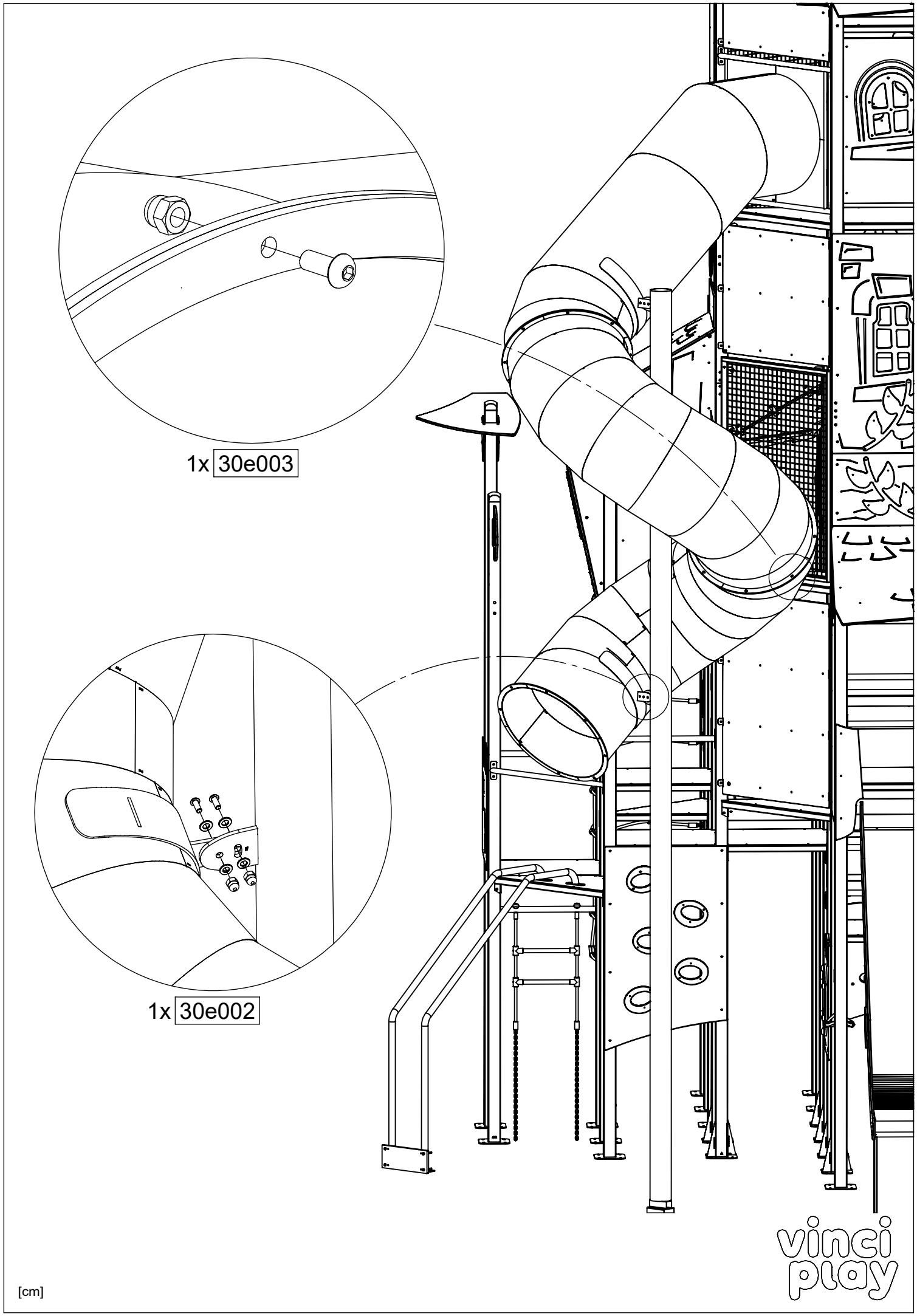
1x 30e003
1x 30e002
vinci play
[cm]

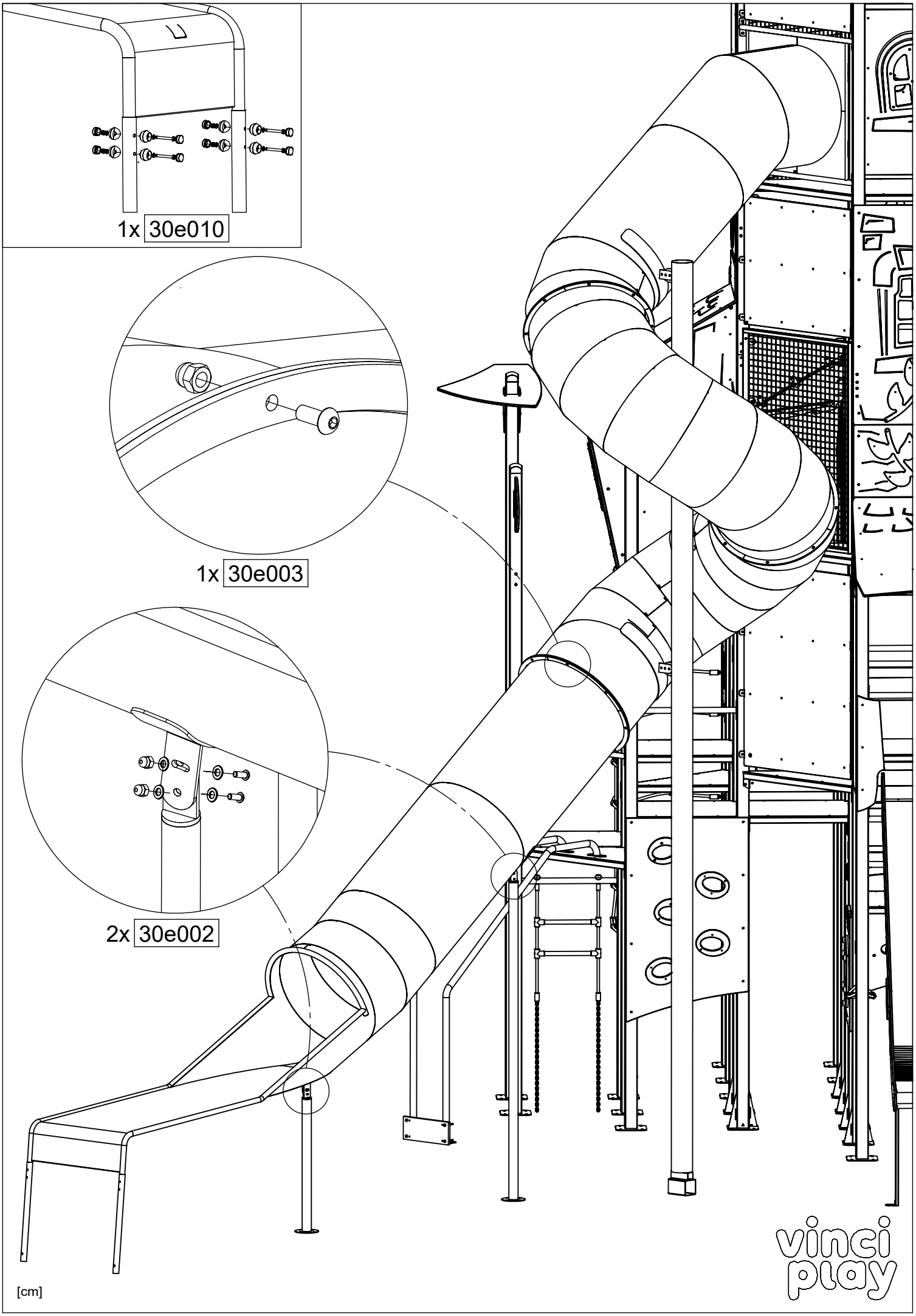
1x 30e010
1x 30e003
2x 30e002
[cm]
vinci play

3060-1.01S2

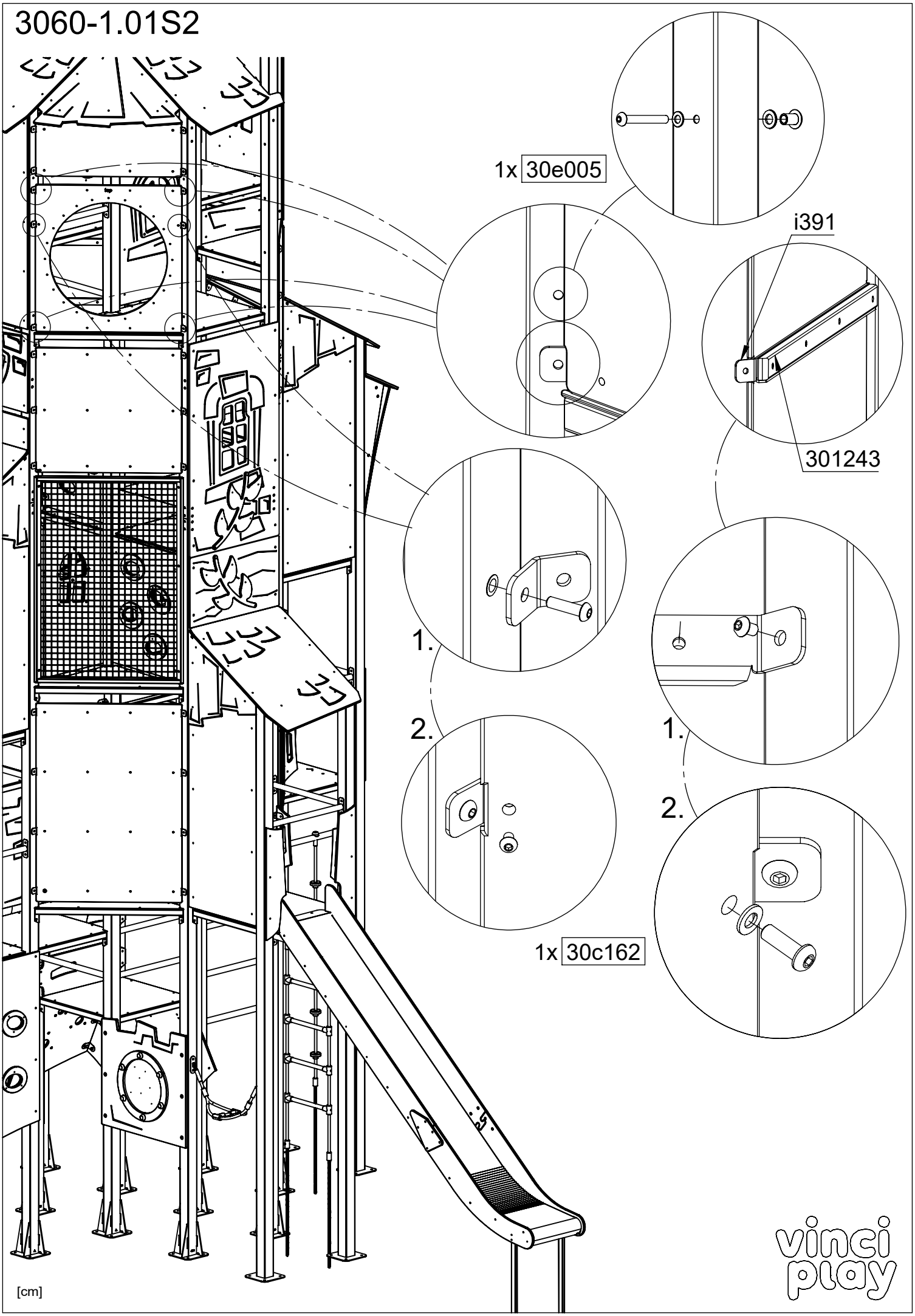

3060-1.01S2

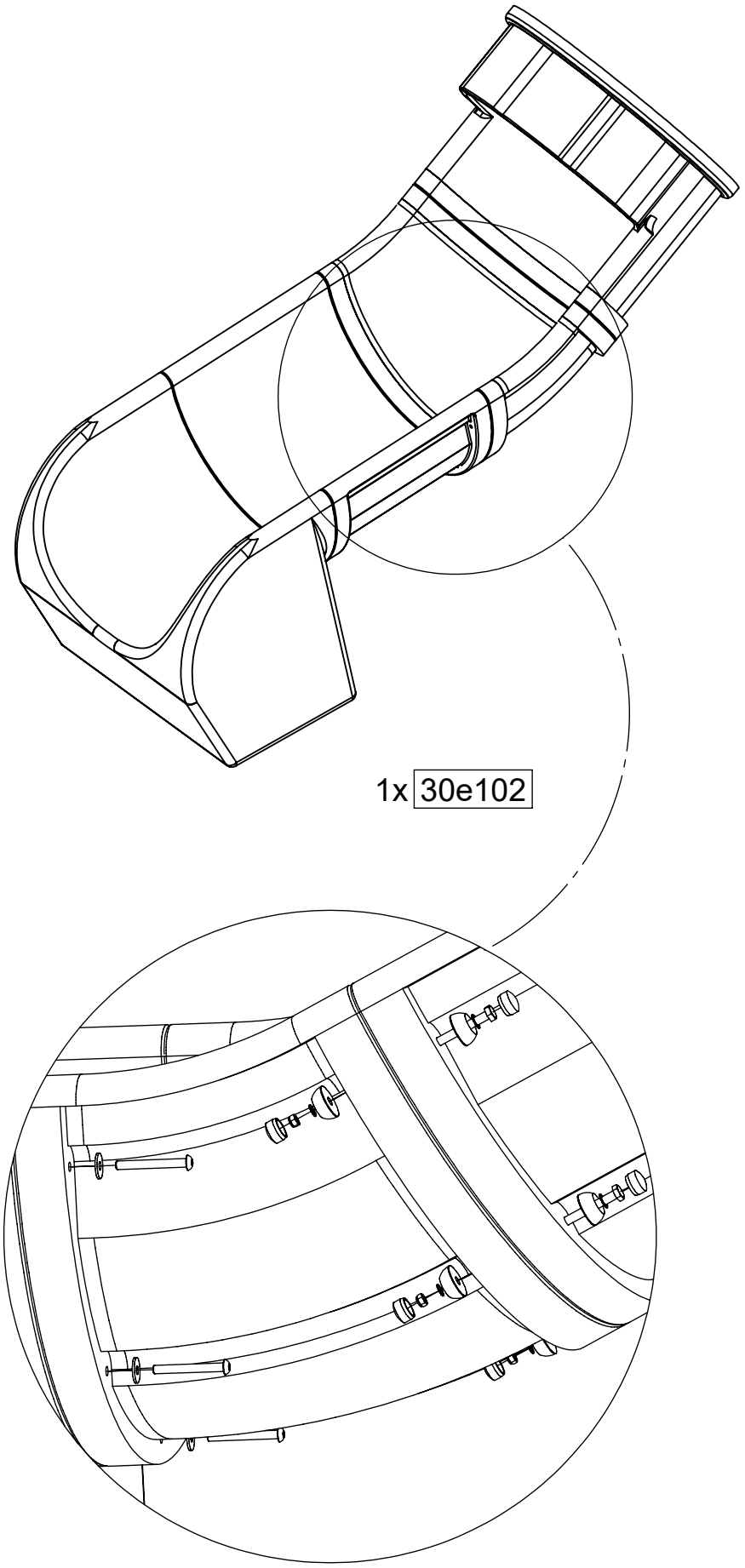

[cm]

3060-1.01S2

5x 30e095

9x 30e090

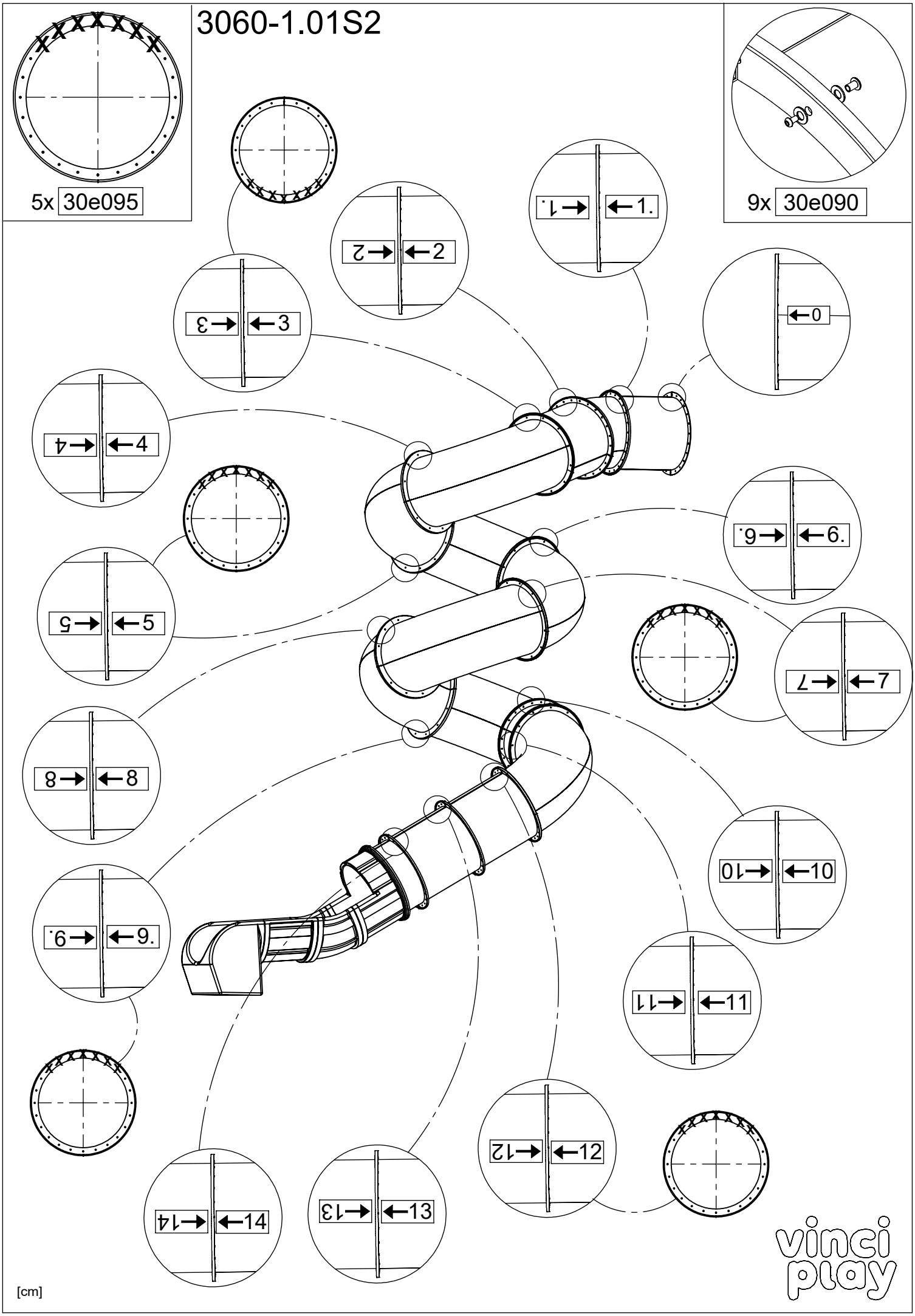

3060-1.01S2

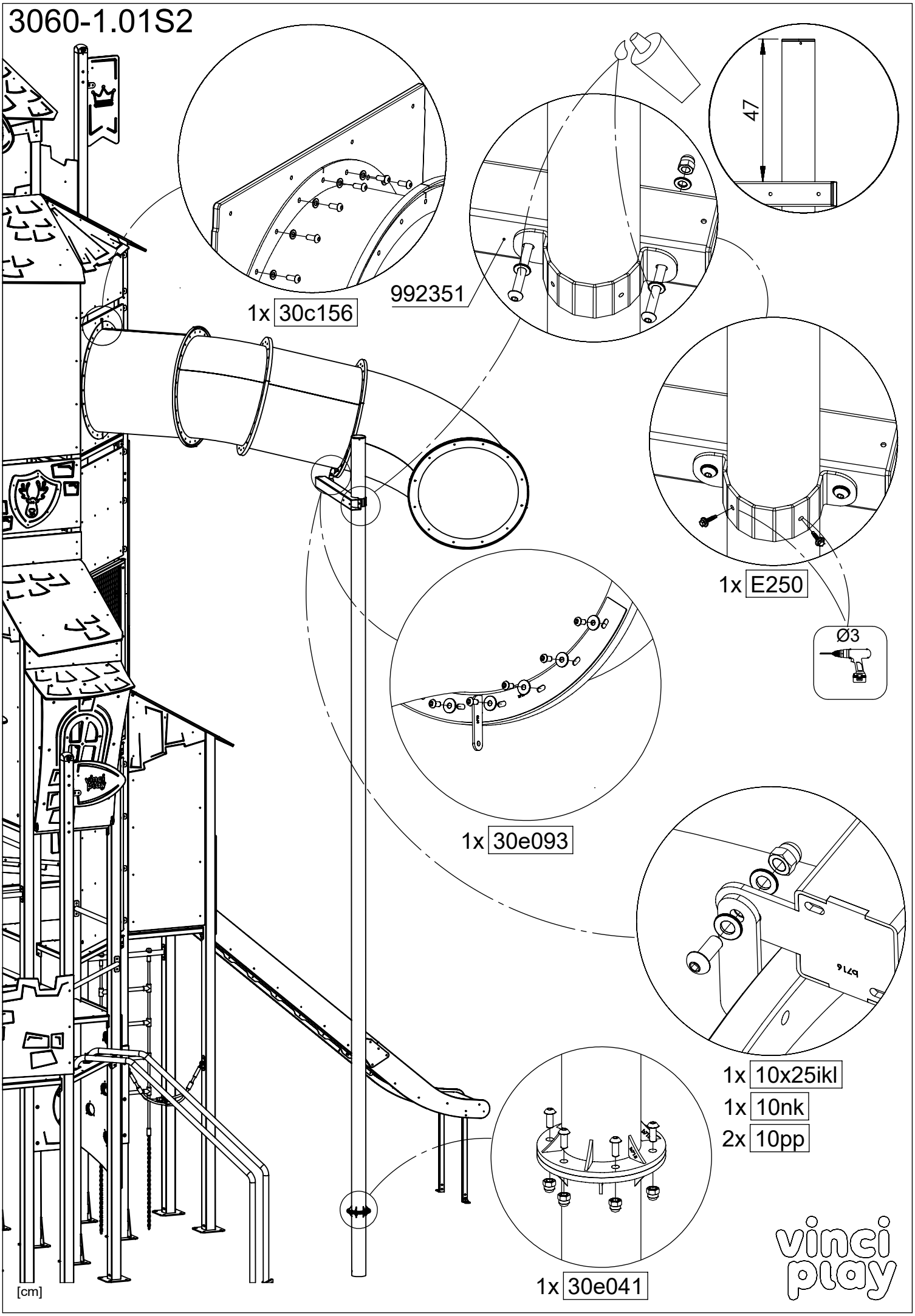
1x 30c156
992351
47
1x E250
Ø3
1x 30e093
1x 10x25ikl
1x 10nk
2x 10pp
1x 30e041
[cm]
vinci play

3060-1.01S2

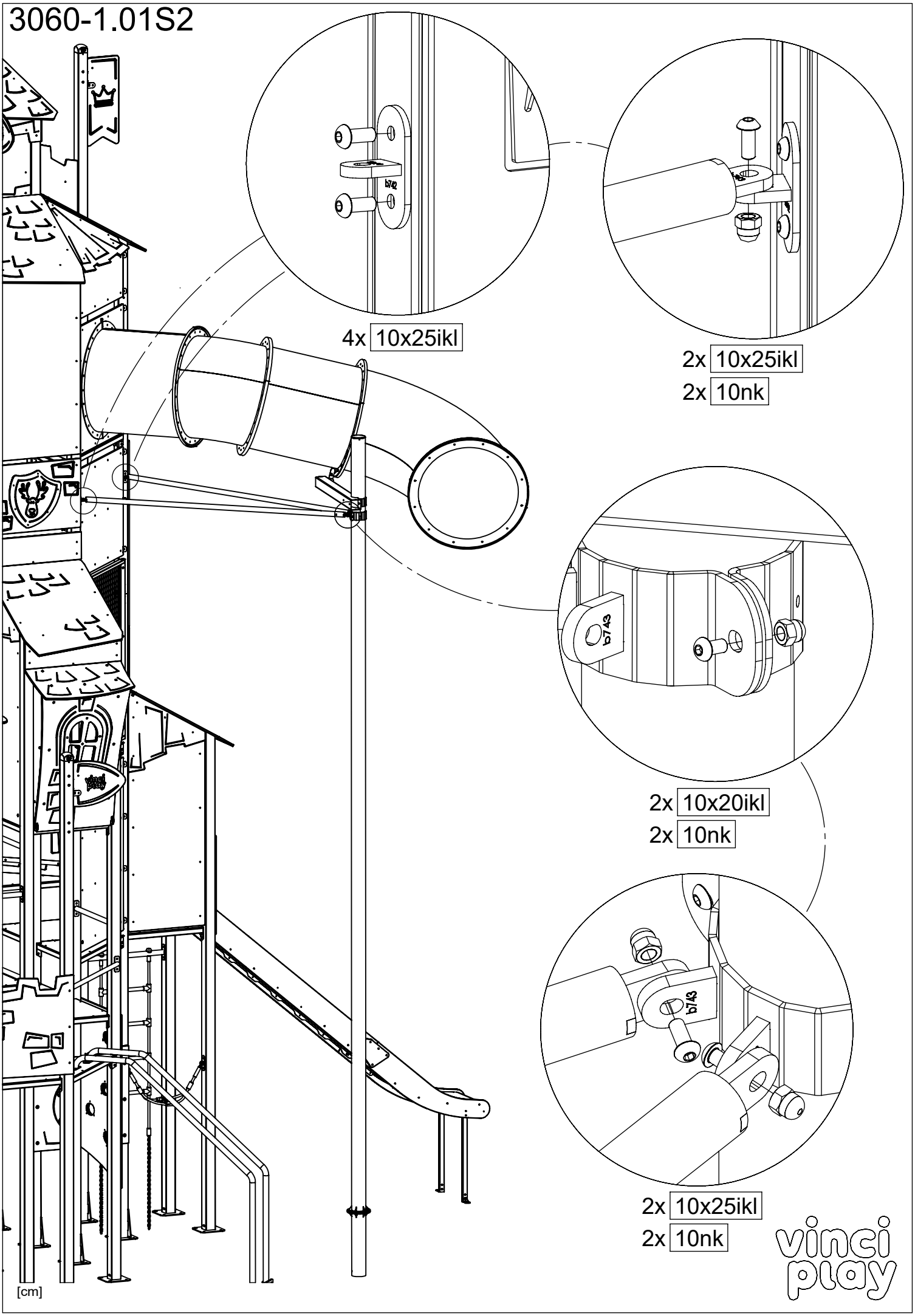
b742
4x 10x25ikl
2x 10x25ikl
2x 10nk
b743
2x 10x20ikl
2x 10nk
b743
2x 10x25ikl
2x 10nk
[cm]

3060-1.01S2

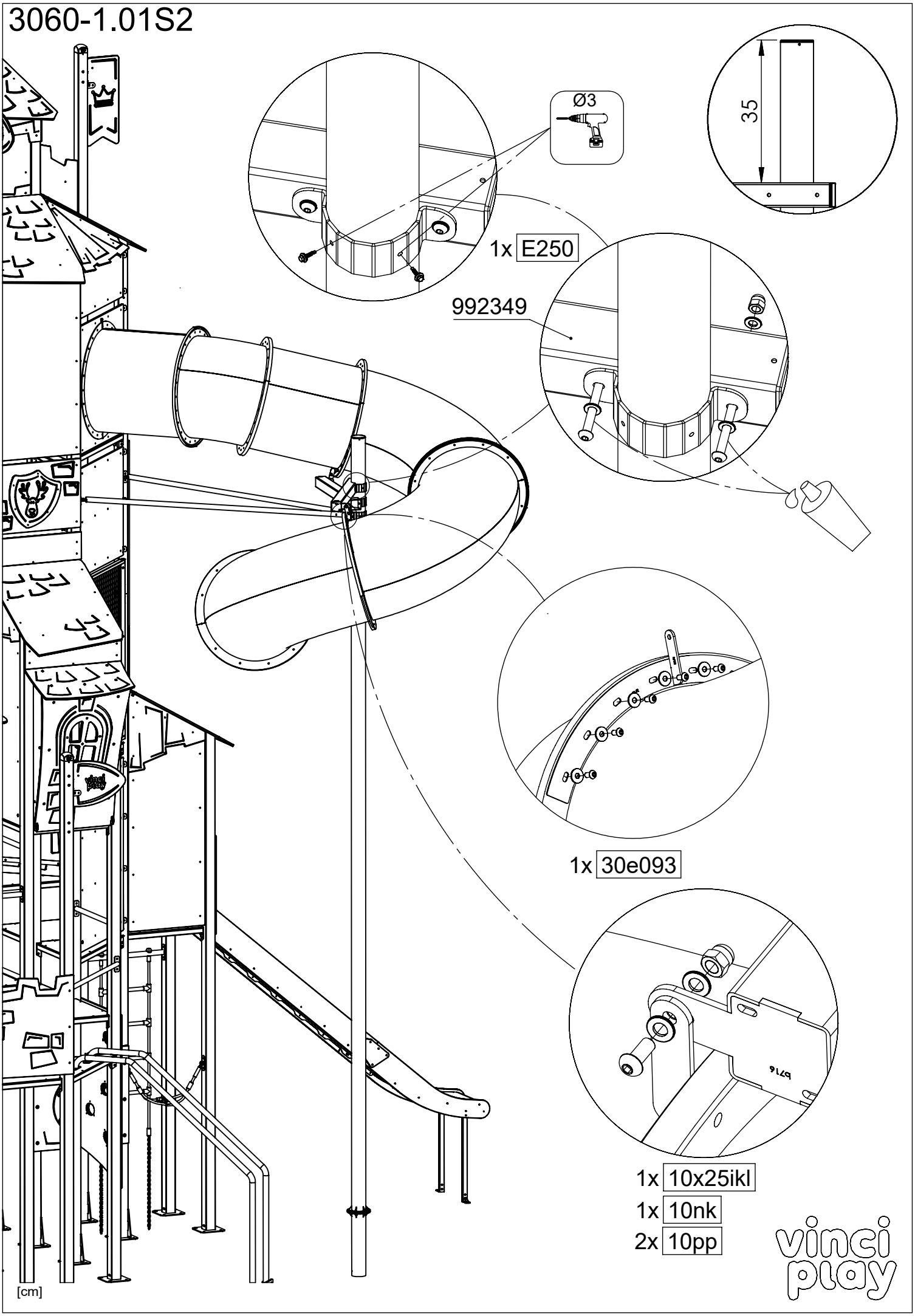

3060-1.01S2

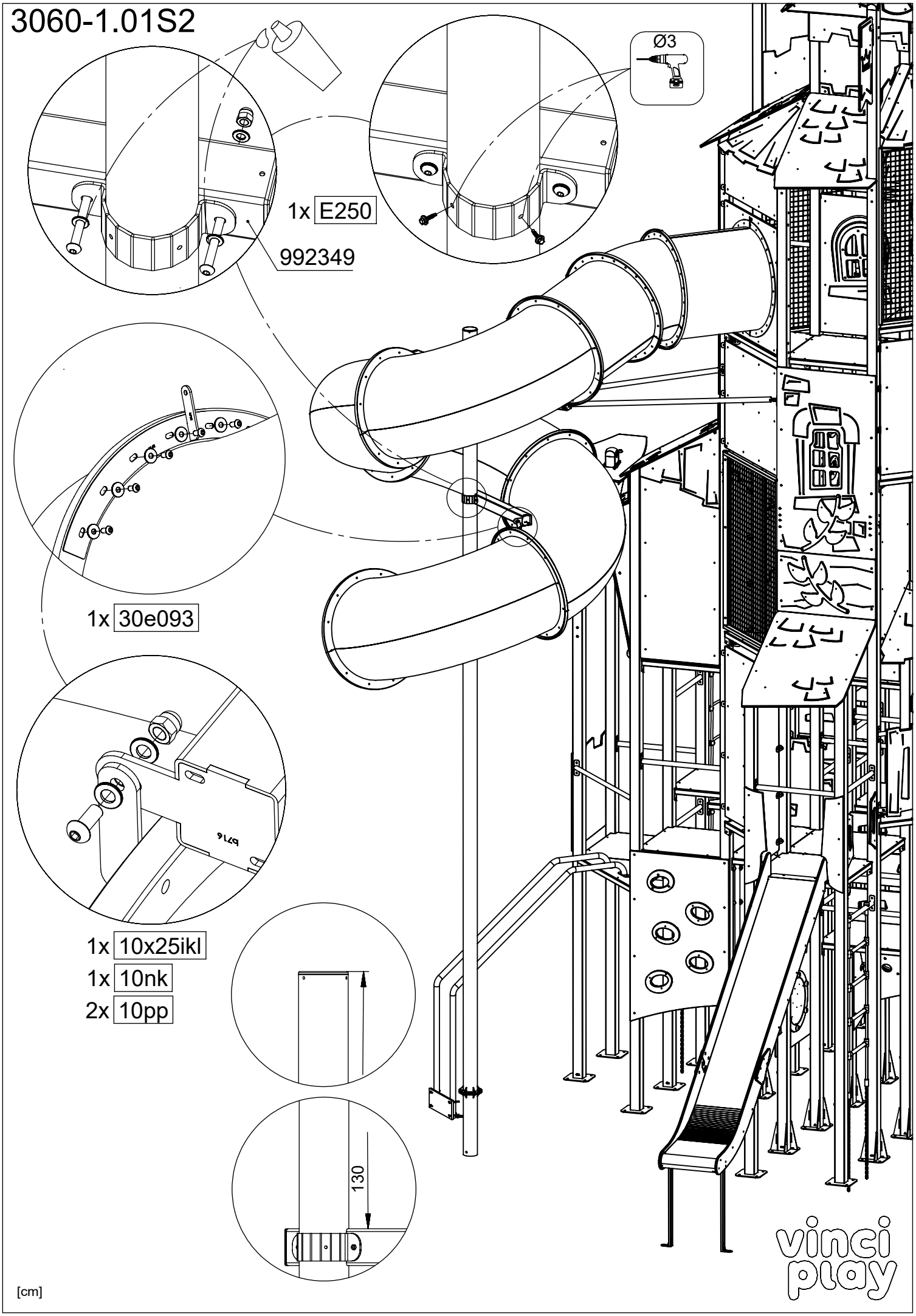
Ø3
1x E250
992349
1x 30e093
1x 10x25ikl
1x 10nk
2x 10pp
130
[cm]
vinci play

3060-1.01S2

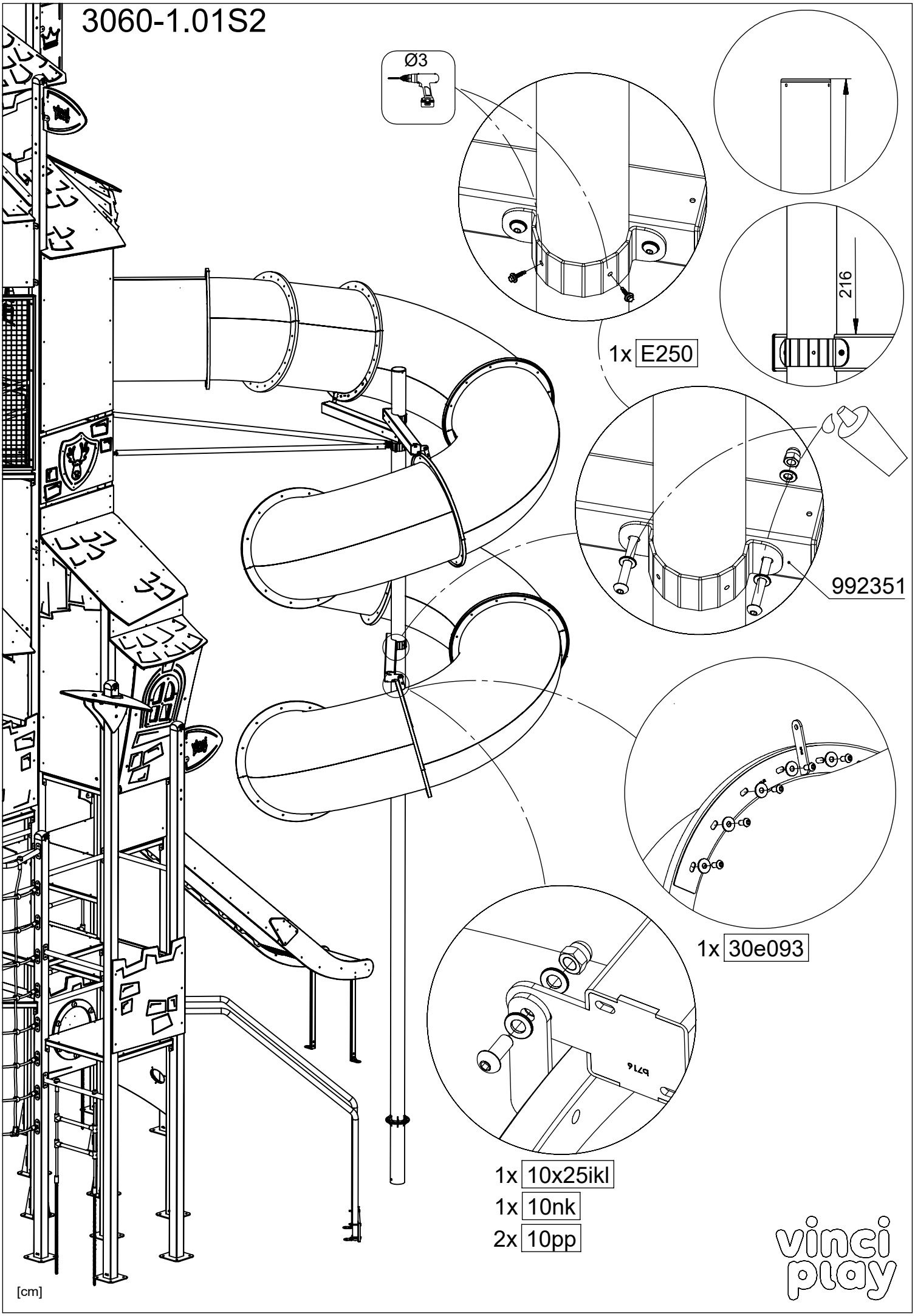

3060-1.01S2

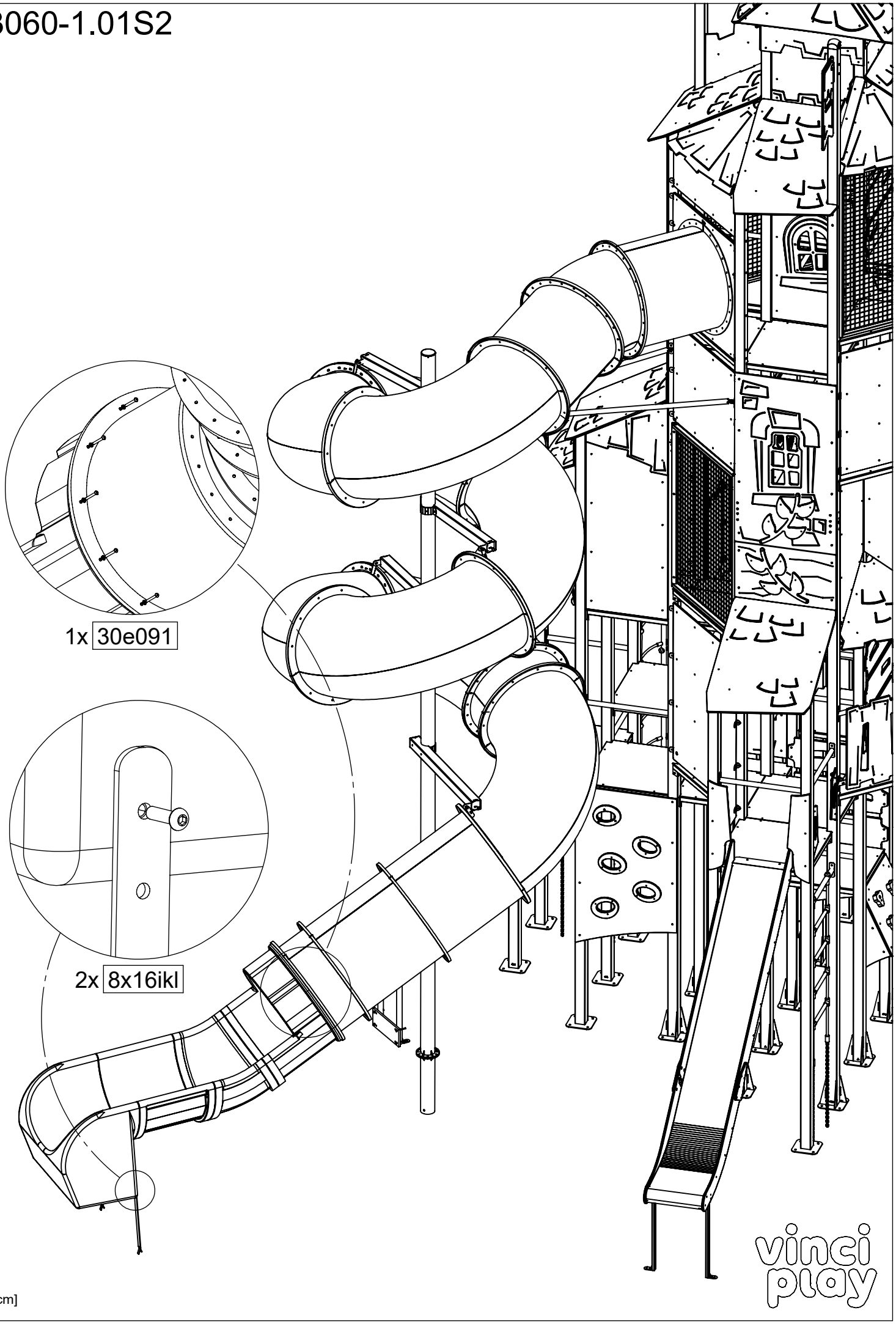

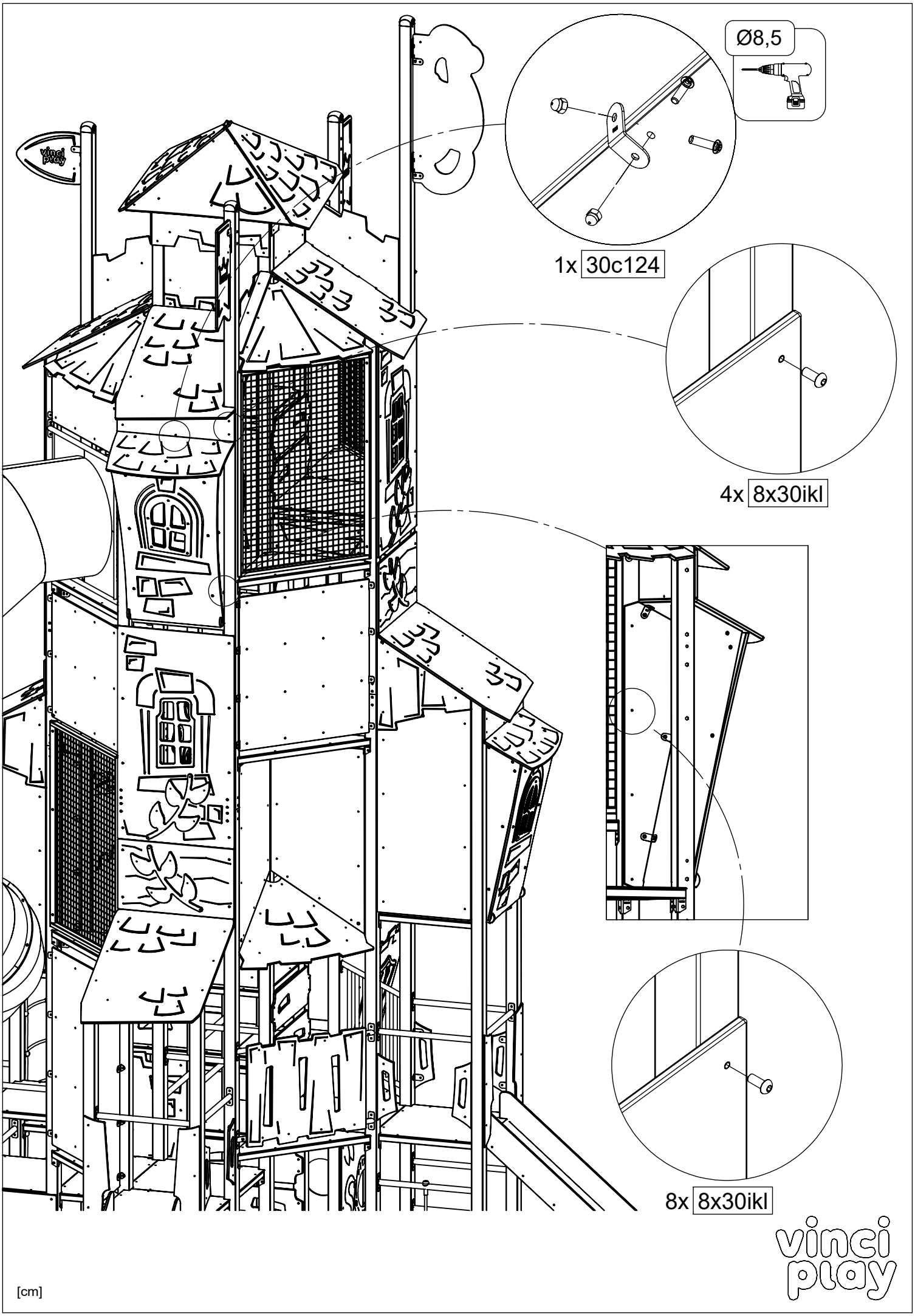
Ø8,5
1x 30c124
4x 8x30ikl
8x 8x30ikl
vinci play
[cm]

3060.02

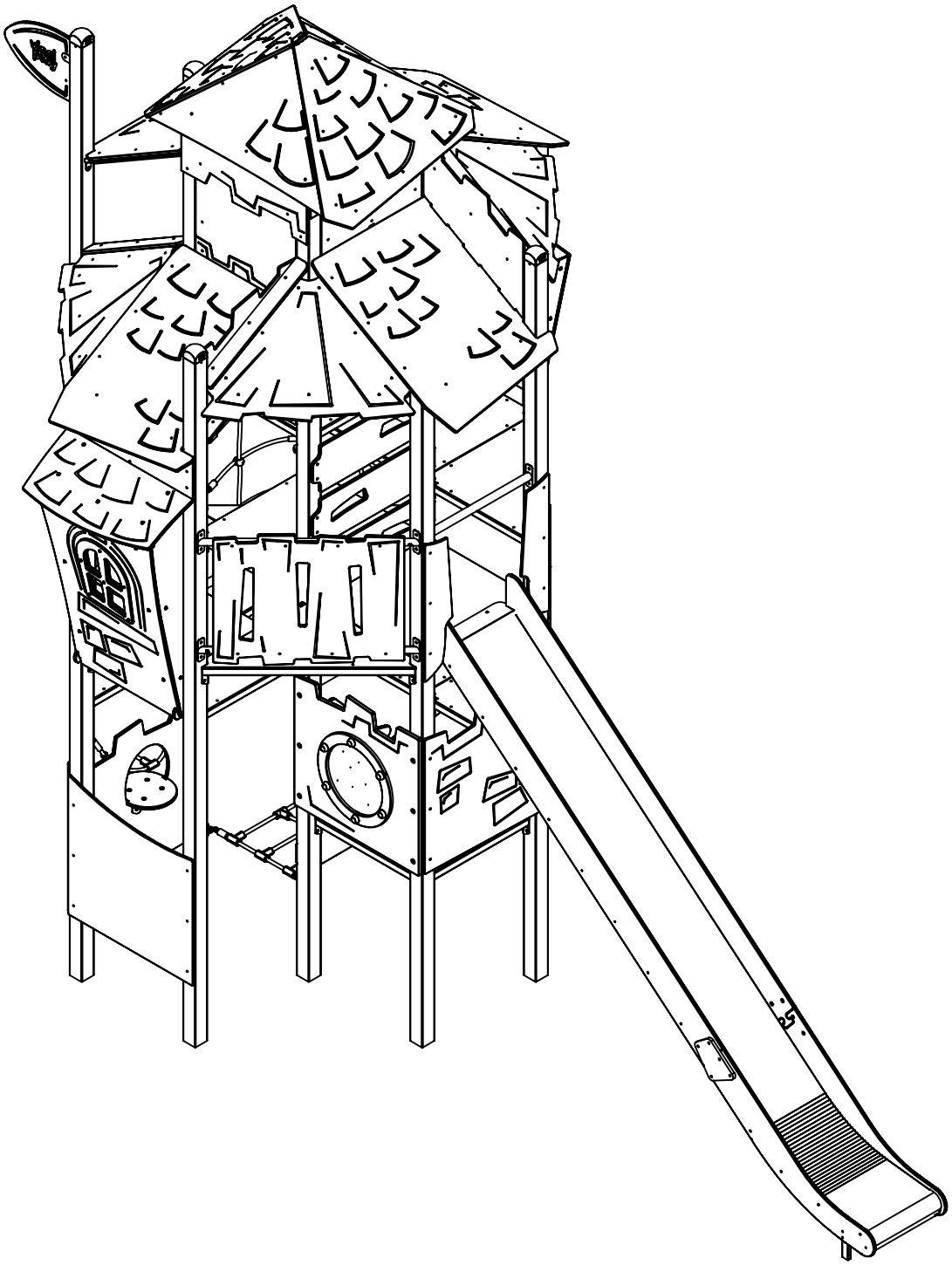

[cm]

vinci play

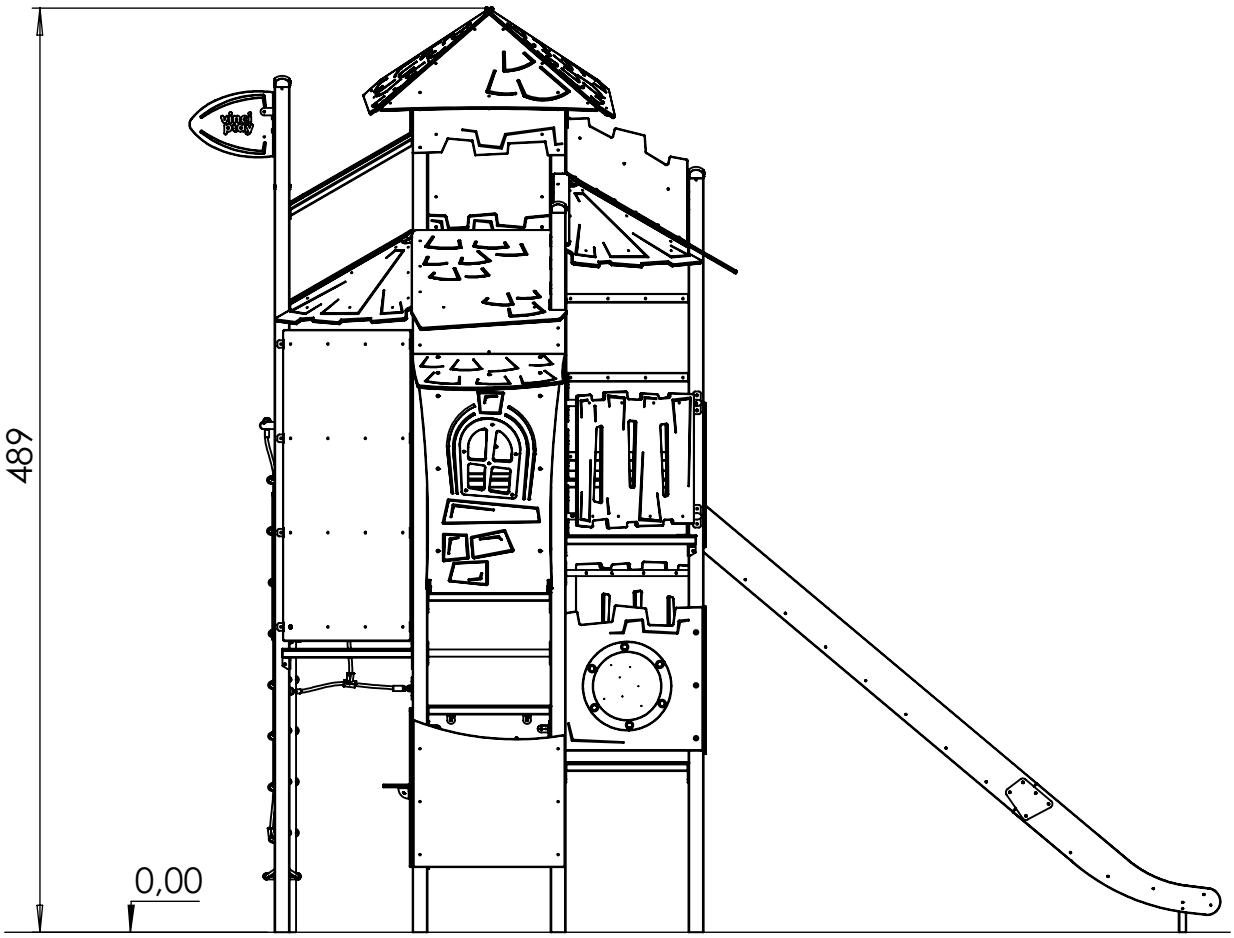

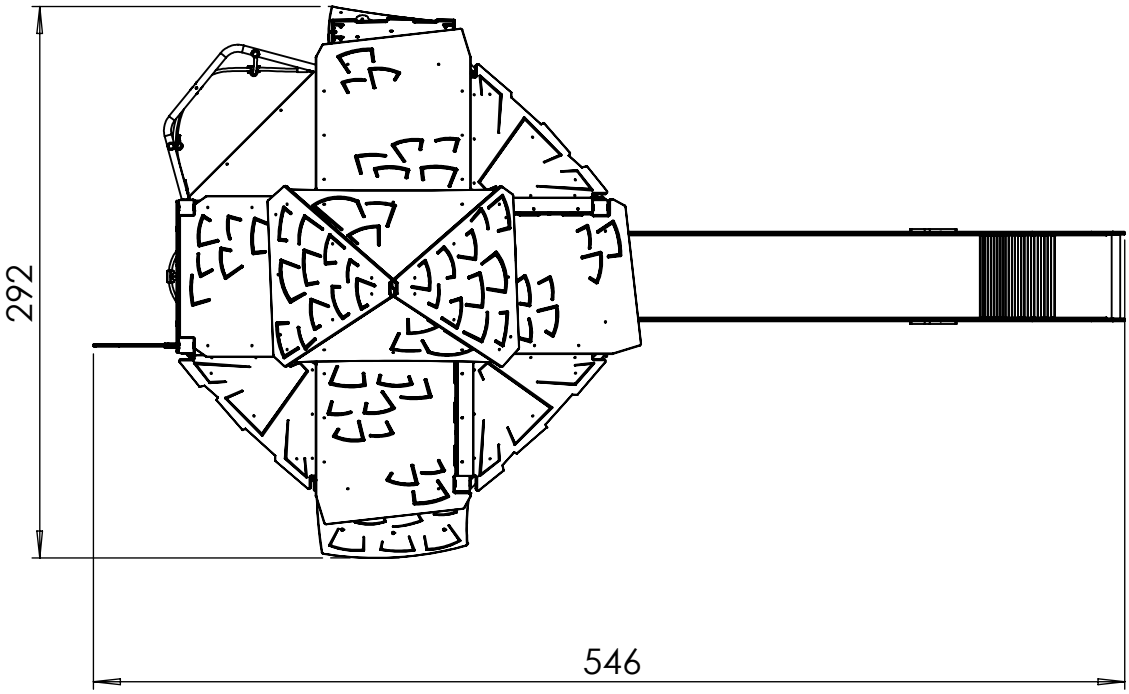

[cm]

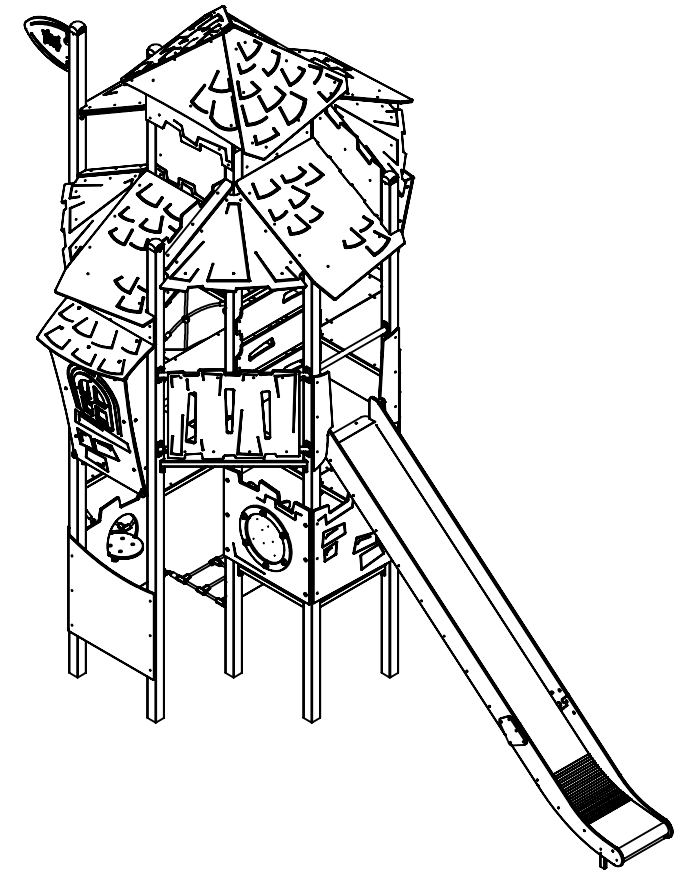

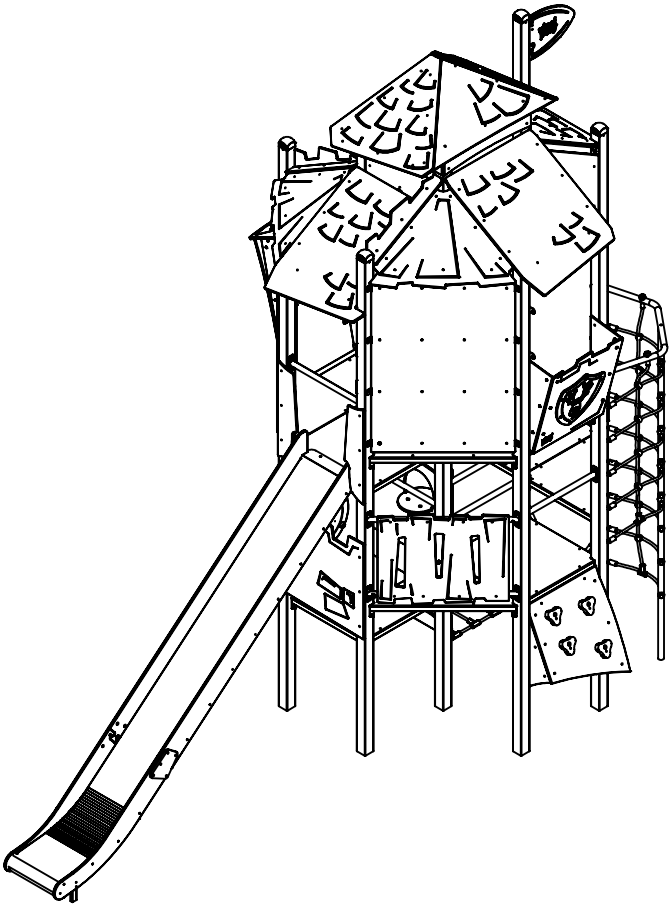

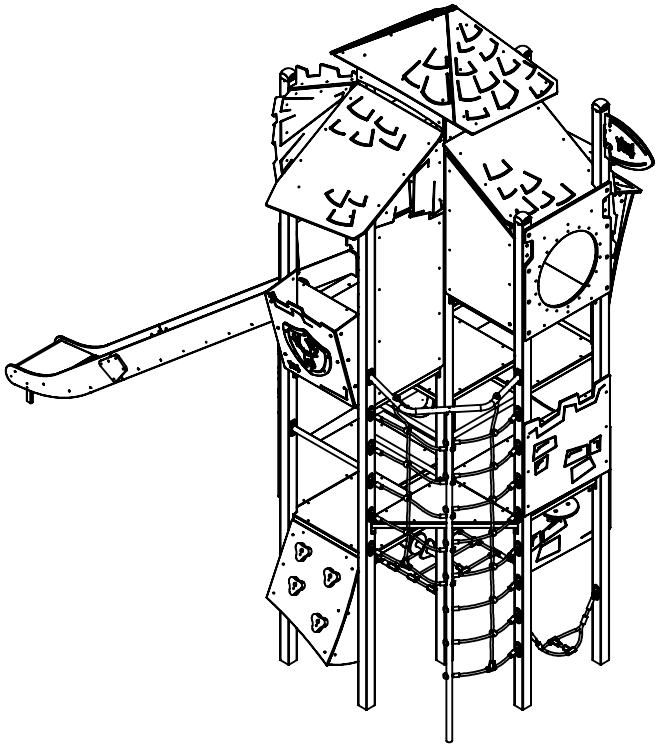

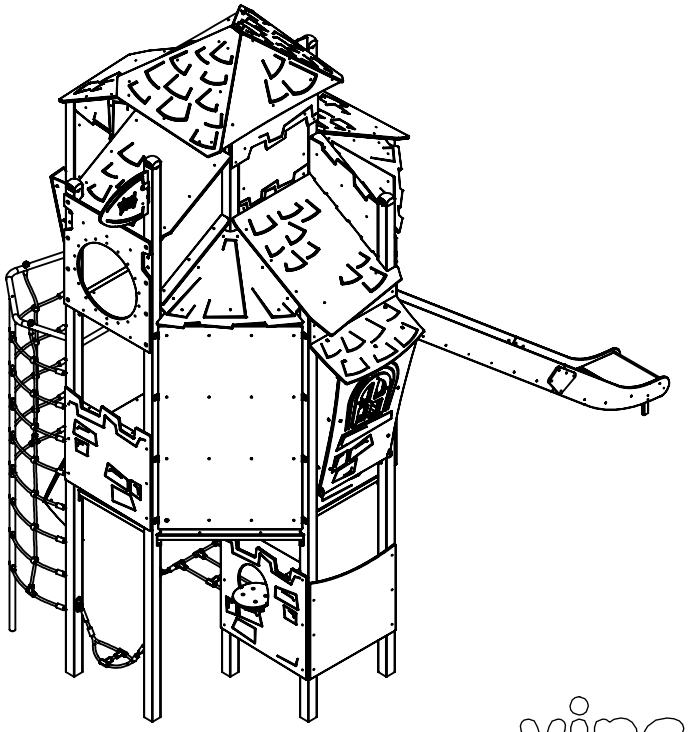

[cm]

vinci play

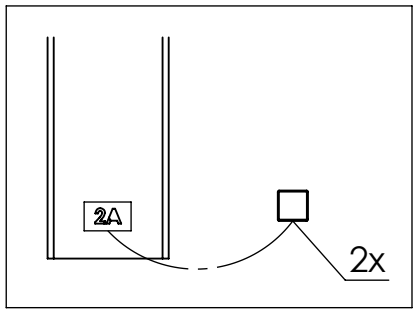
2A
2x

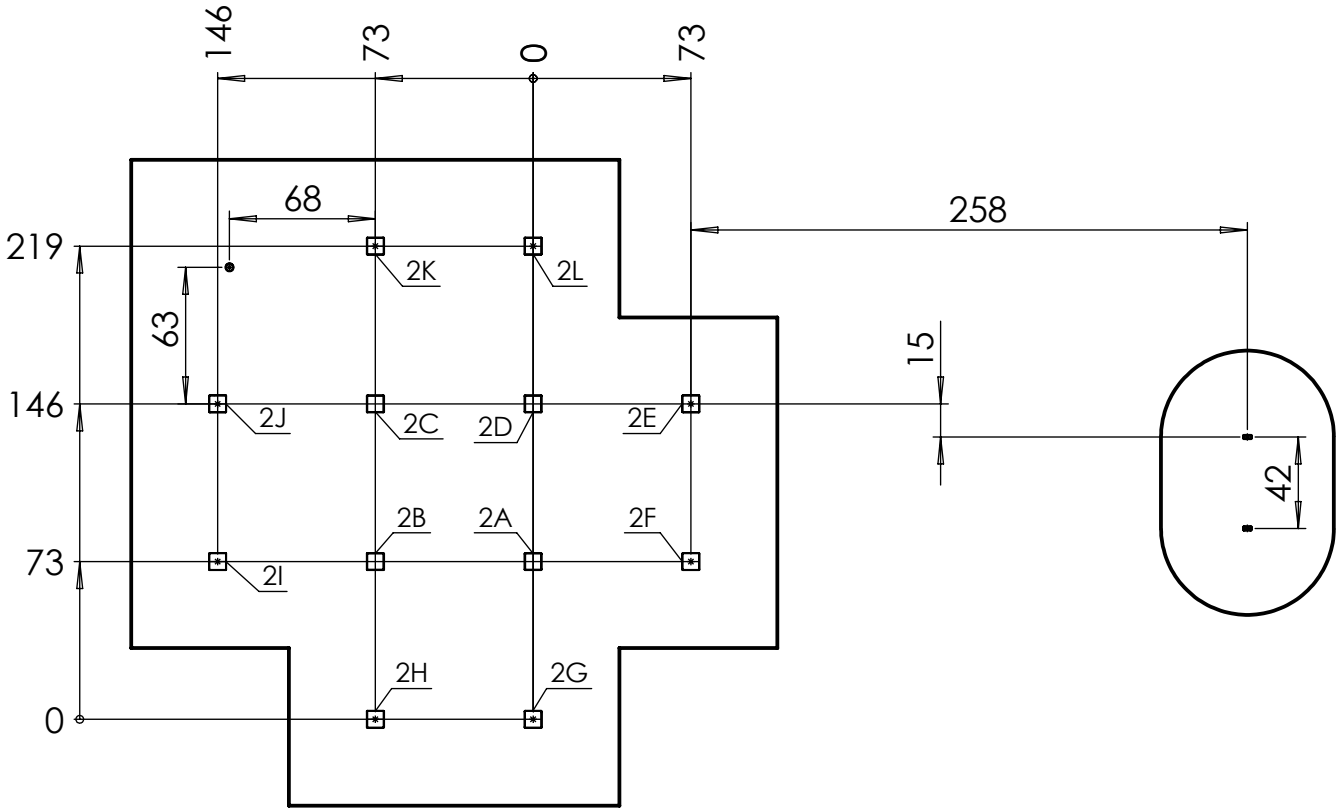
146
73
0
73
68
258
219
63
15
146
42
73
0
2K
2L
2J
2C
2D
2E
2B
2A
2F
2I
2H
2G

[cm]

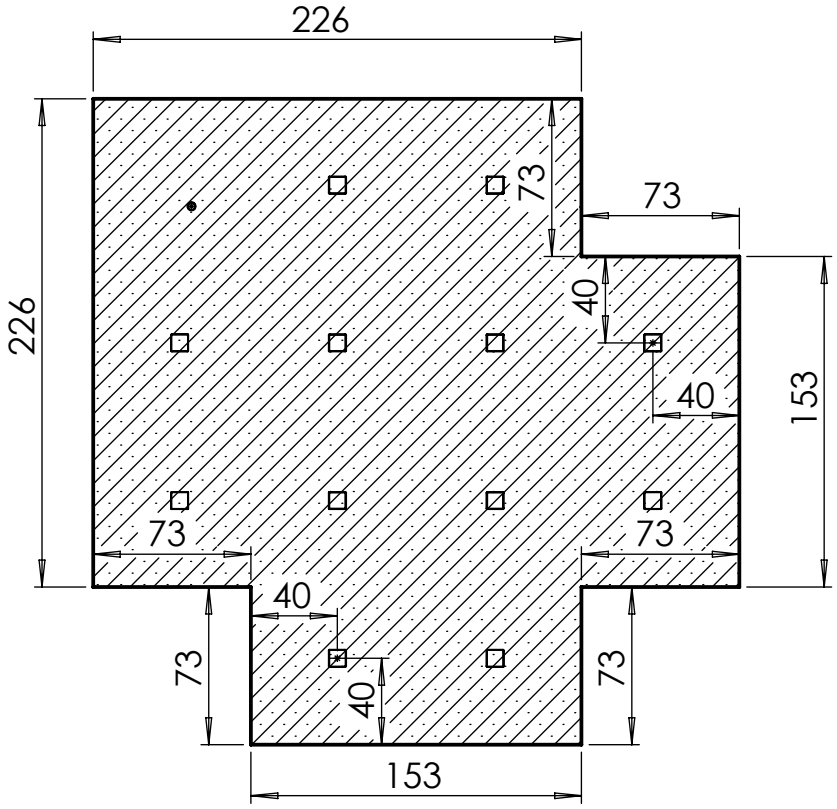

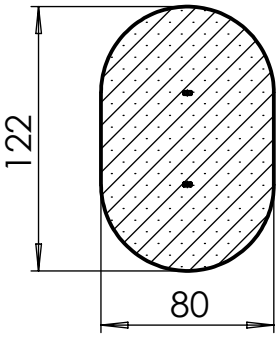

[cm]

vinci play

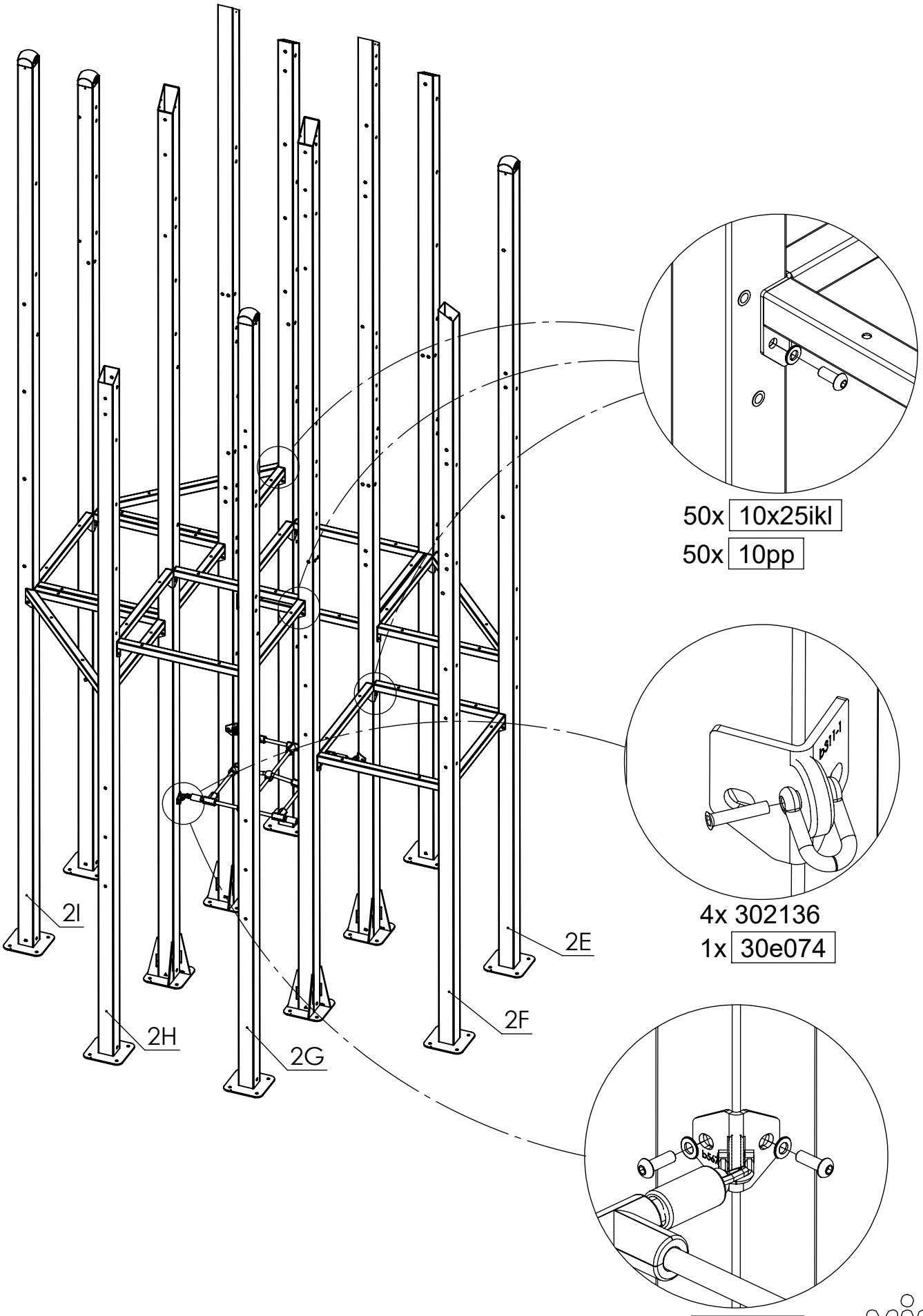

[cm]

vinci play

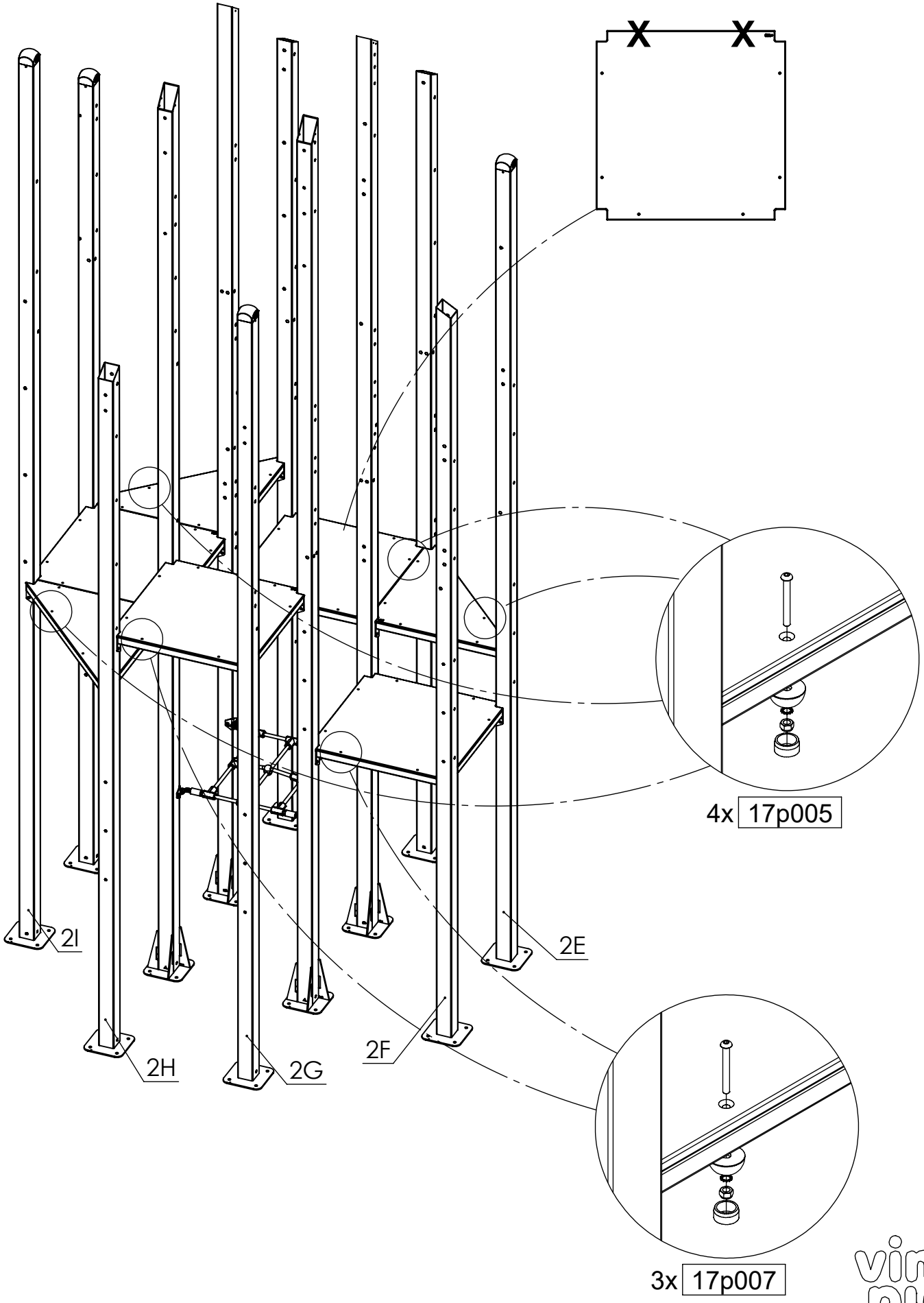

[cm]

vinci play

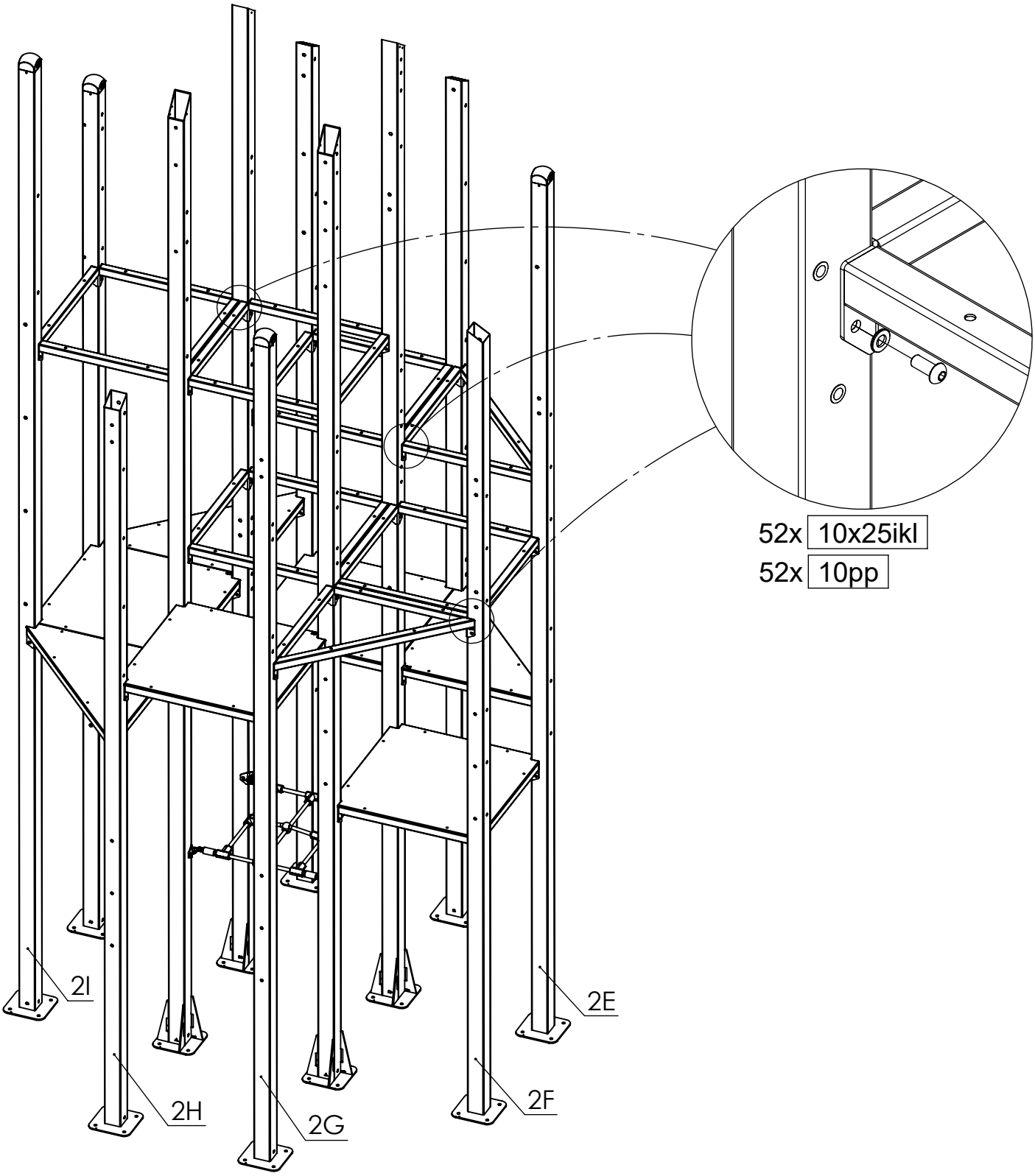

[cm]

vinci play

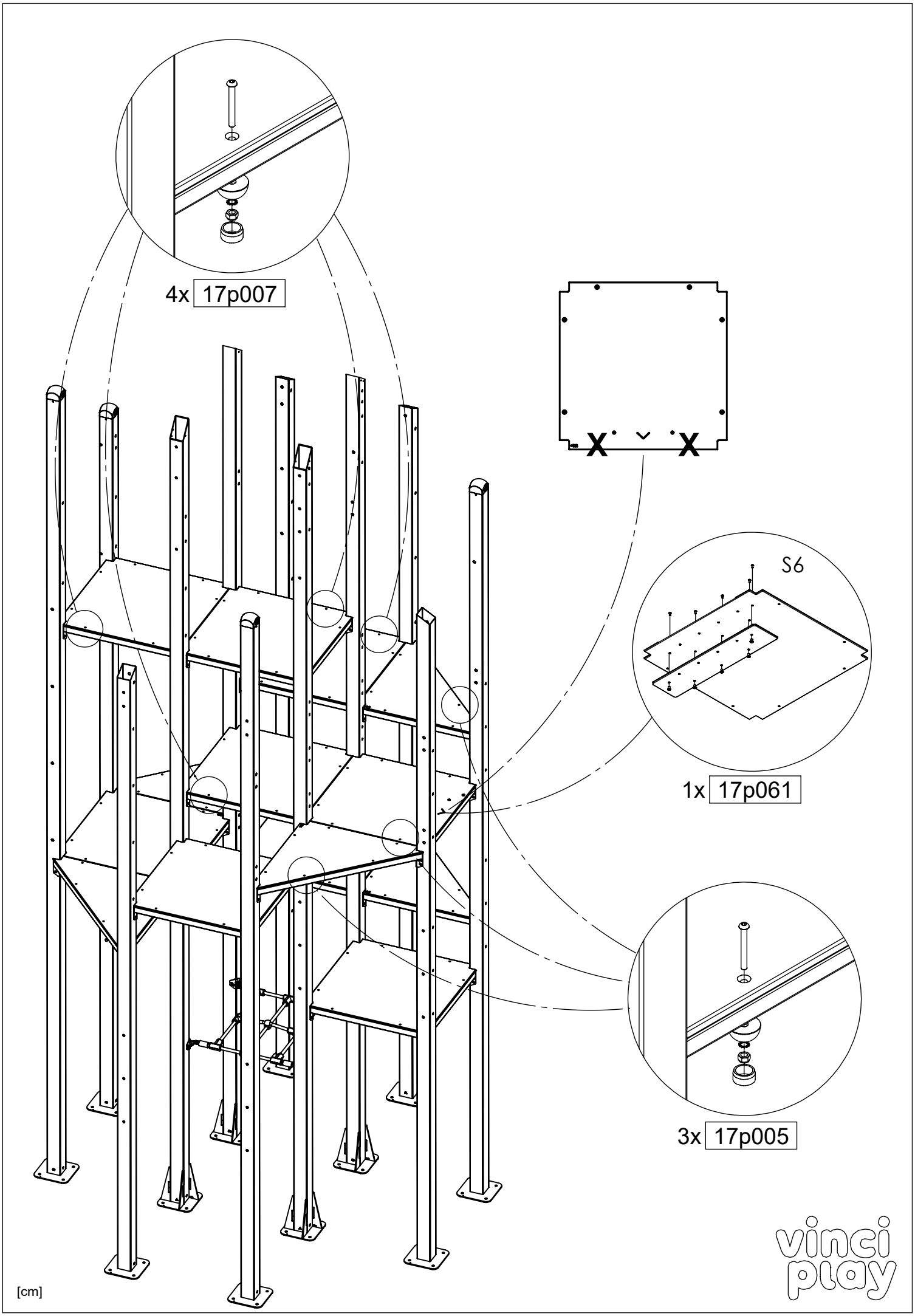
4x 17p007
S6
1x 17p061
3x 17p005
[cm]
vinci play

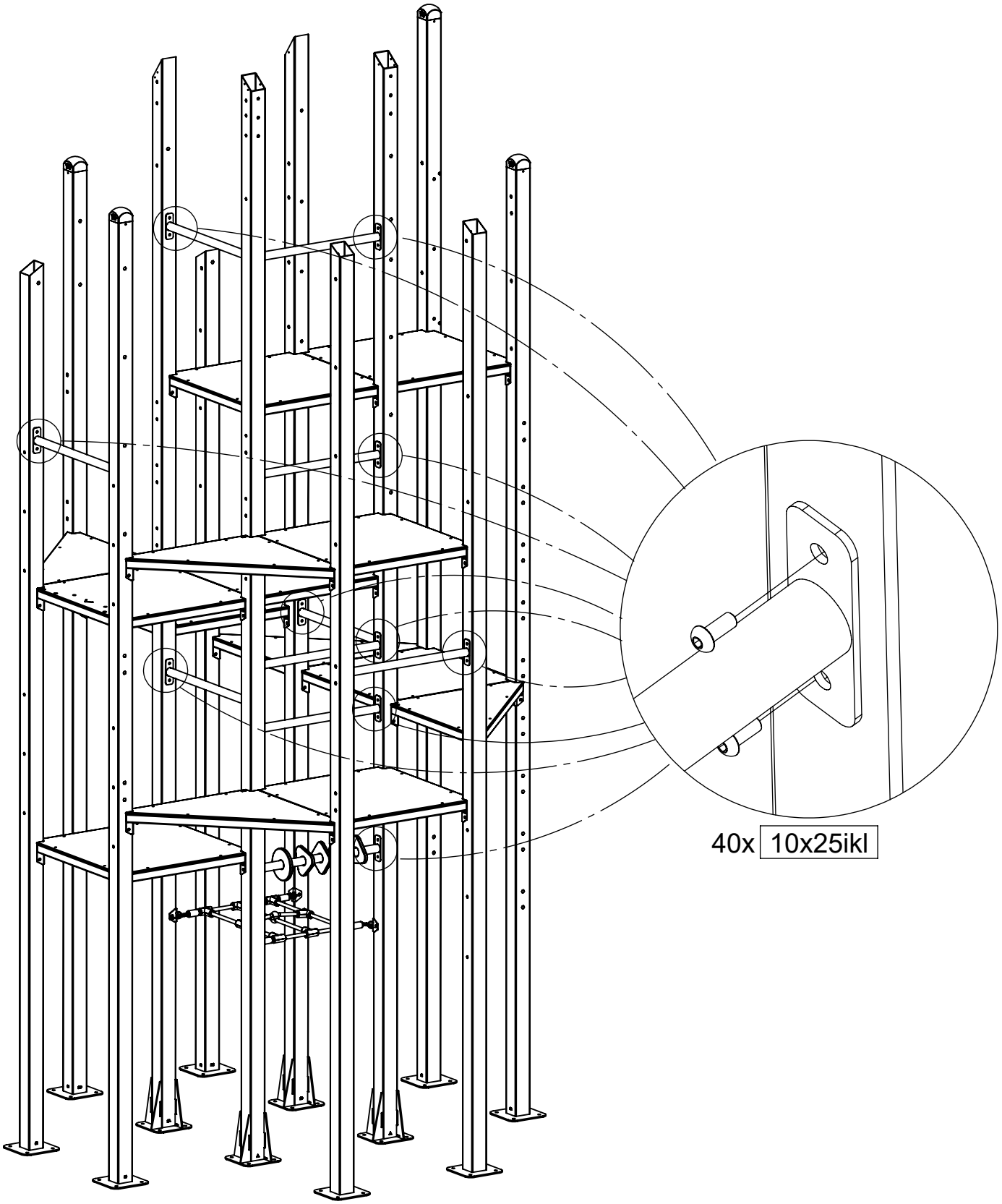

[cm]

vinci play

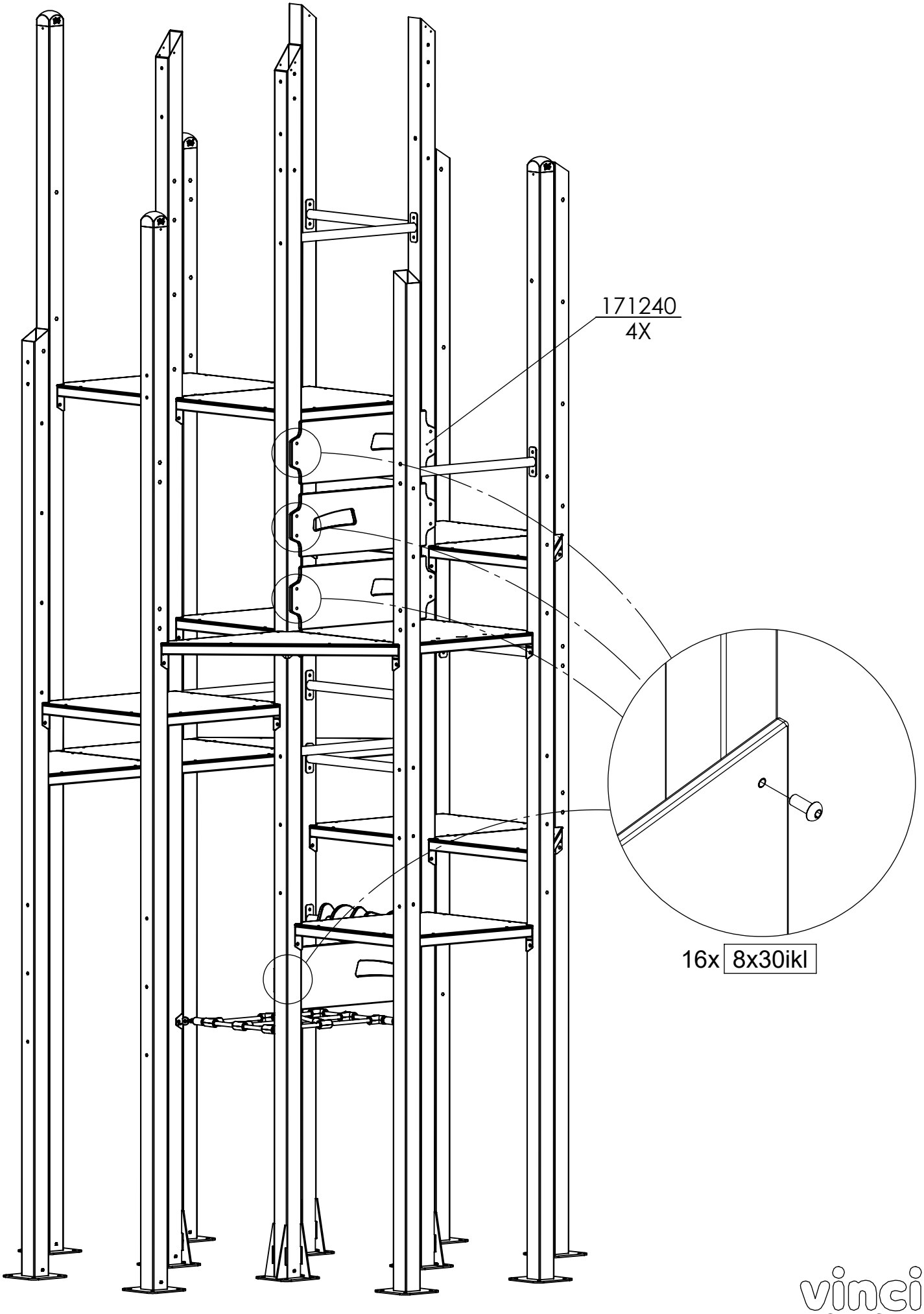

[cm]

vinci play

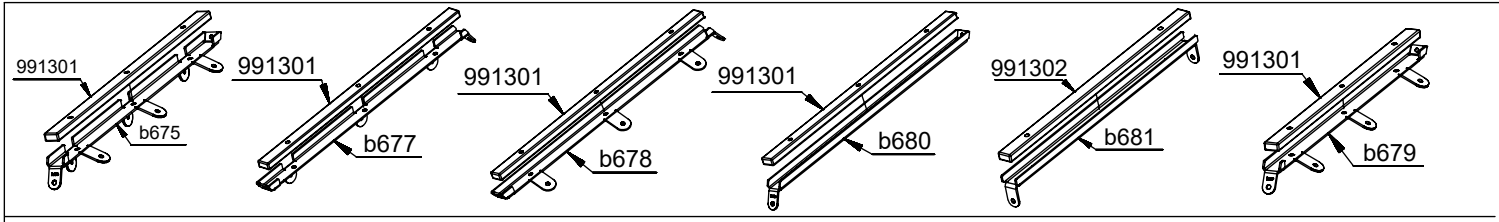

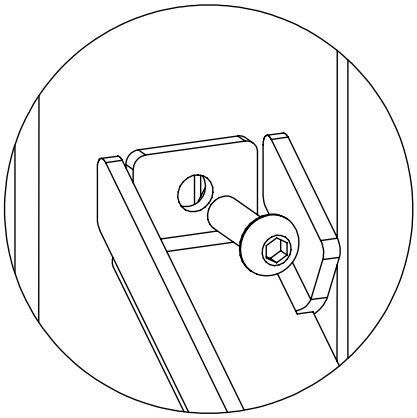

11x 8x25ikl

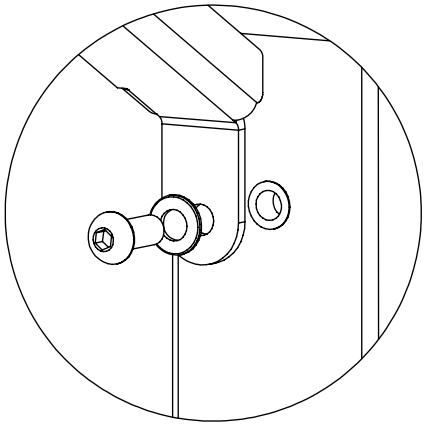

17x 10x25ikl

17x 10pp

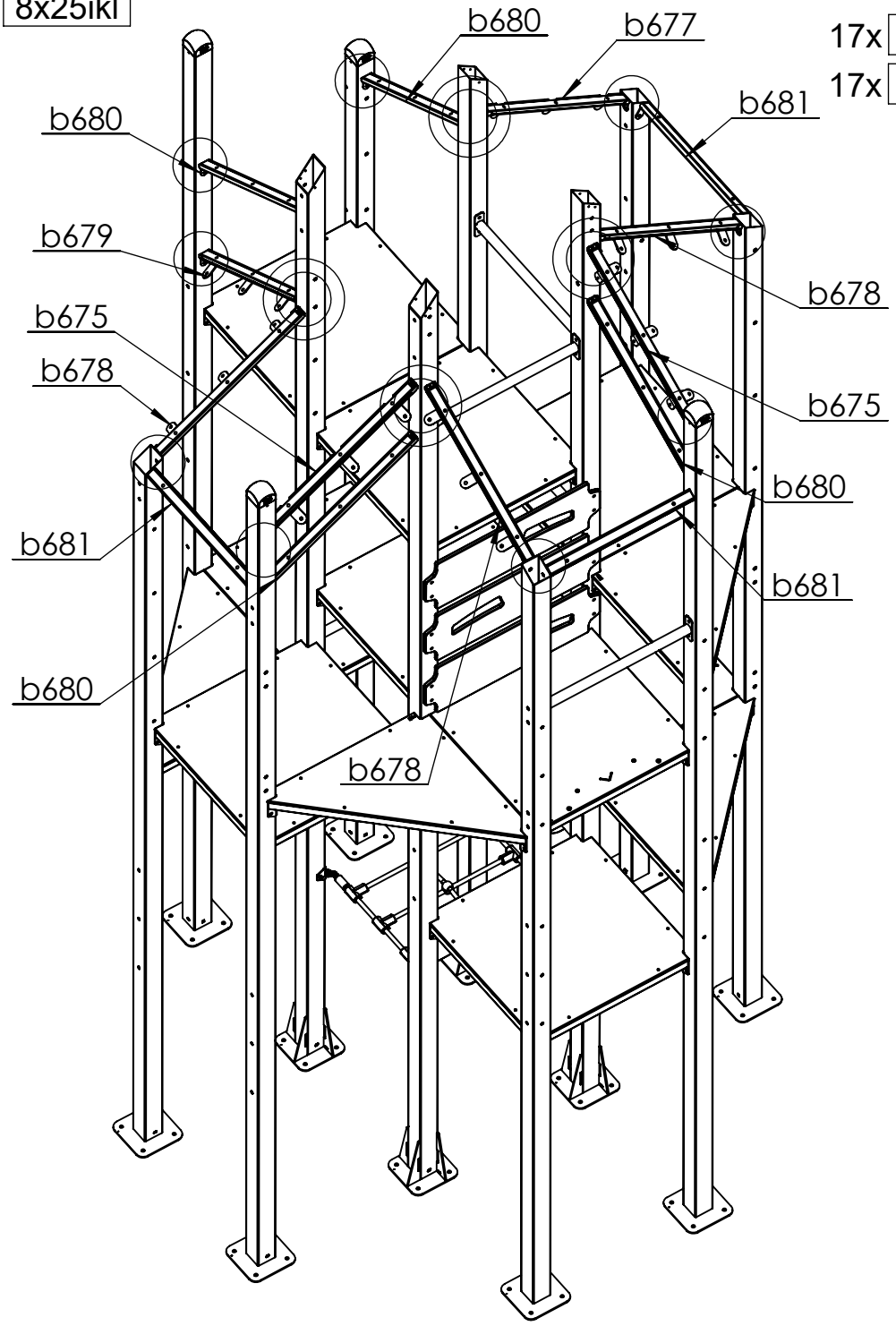

[cm]

vinci play

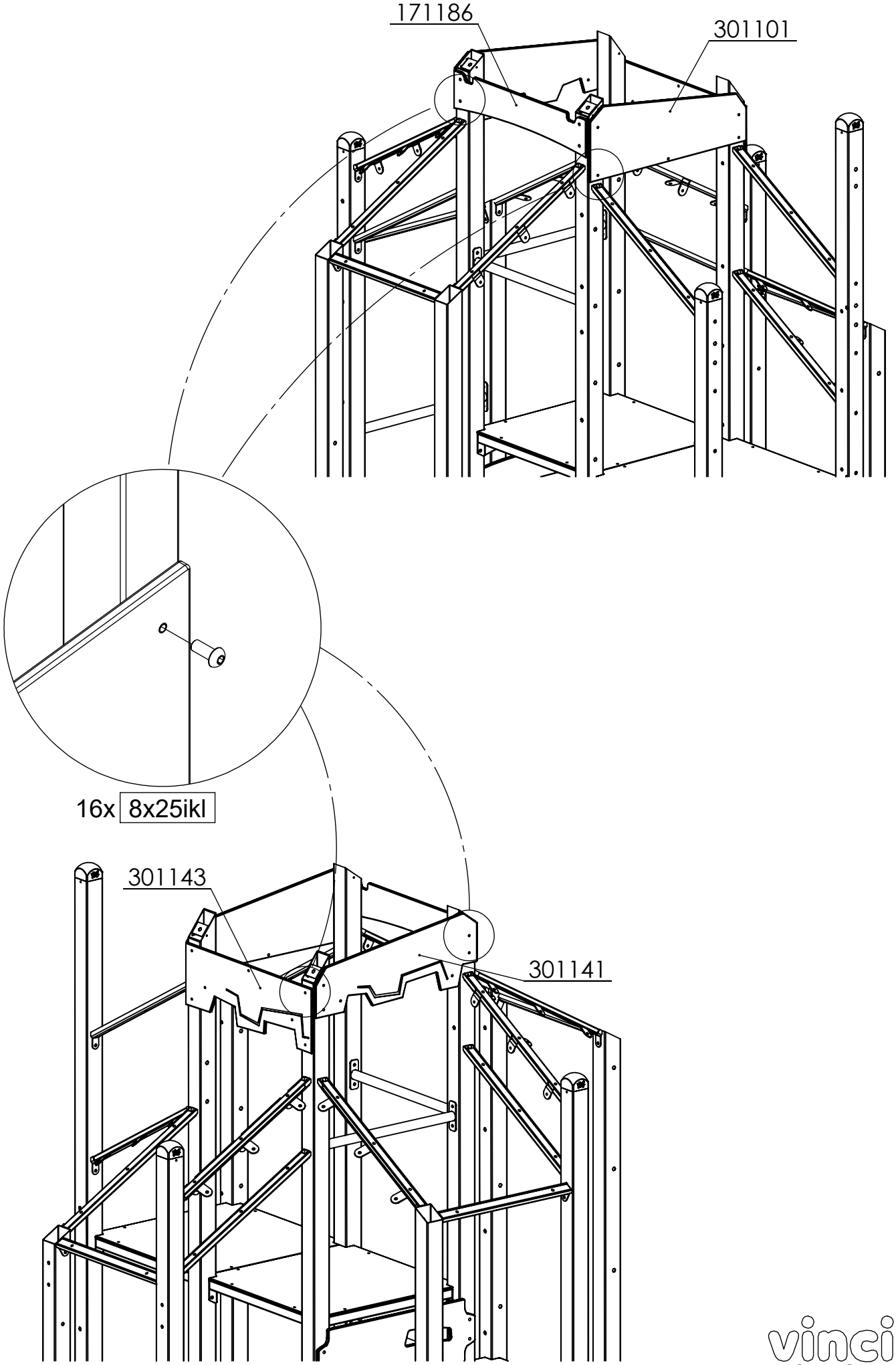

[cm]

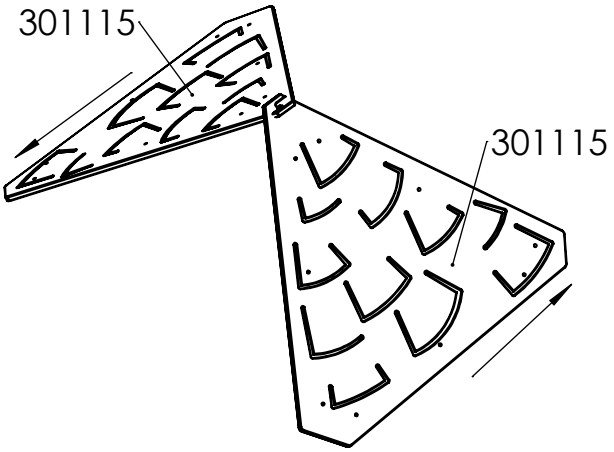

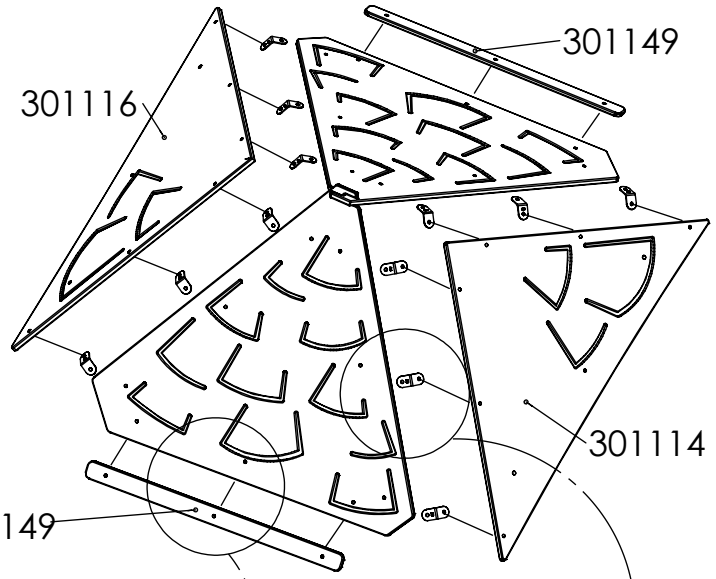

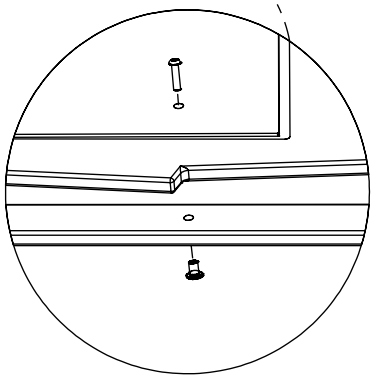

2x 30c152

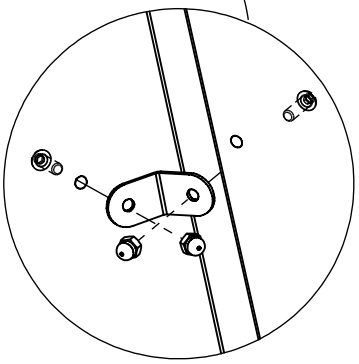

1x 30c058

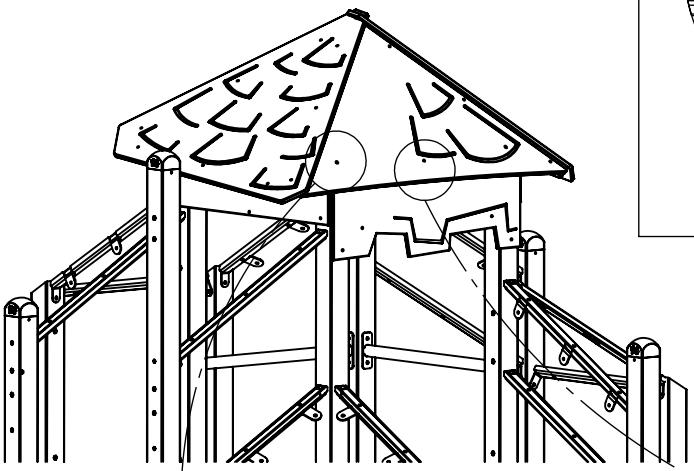

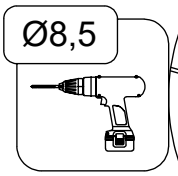

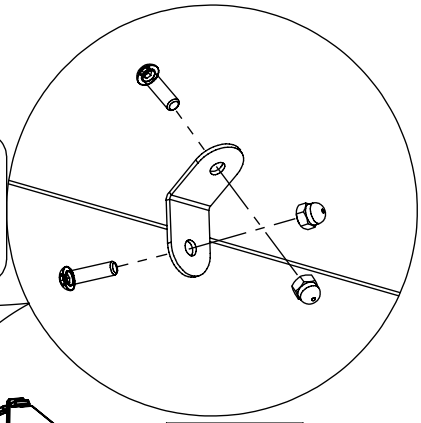

1x 30c154

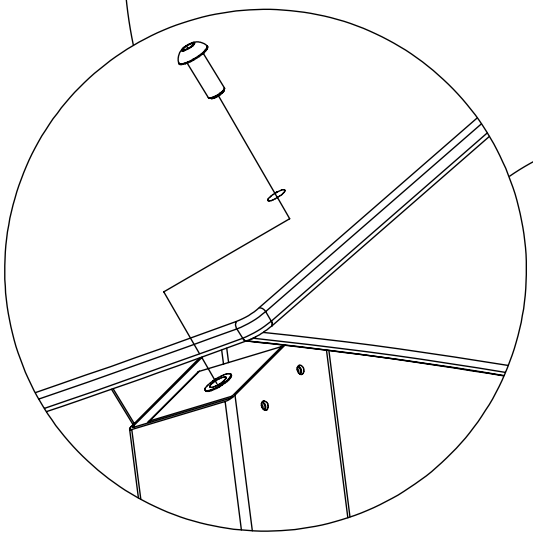

4x 10x30ikl

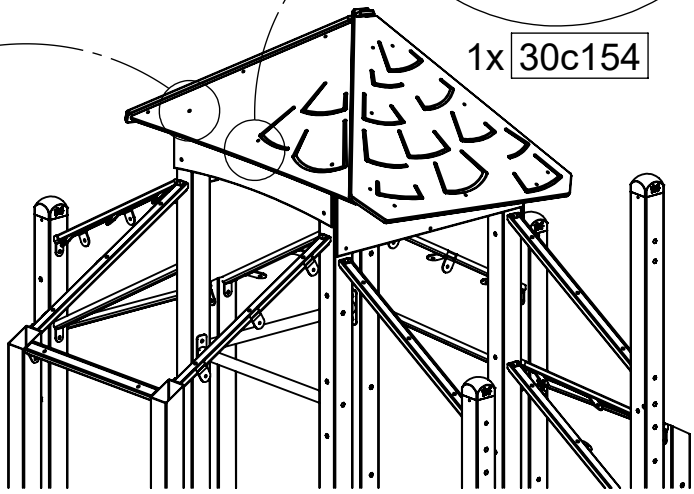

[cm]

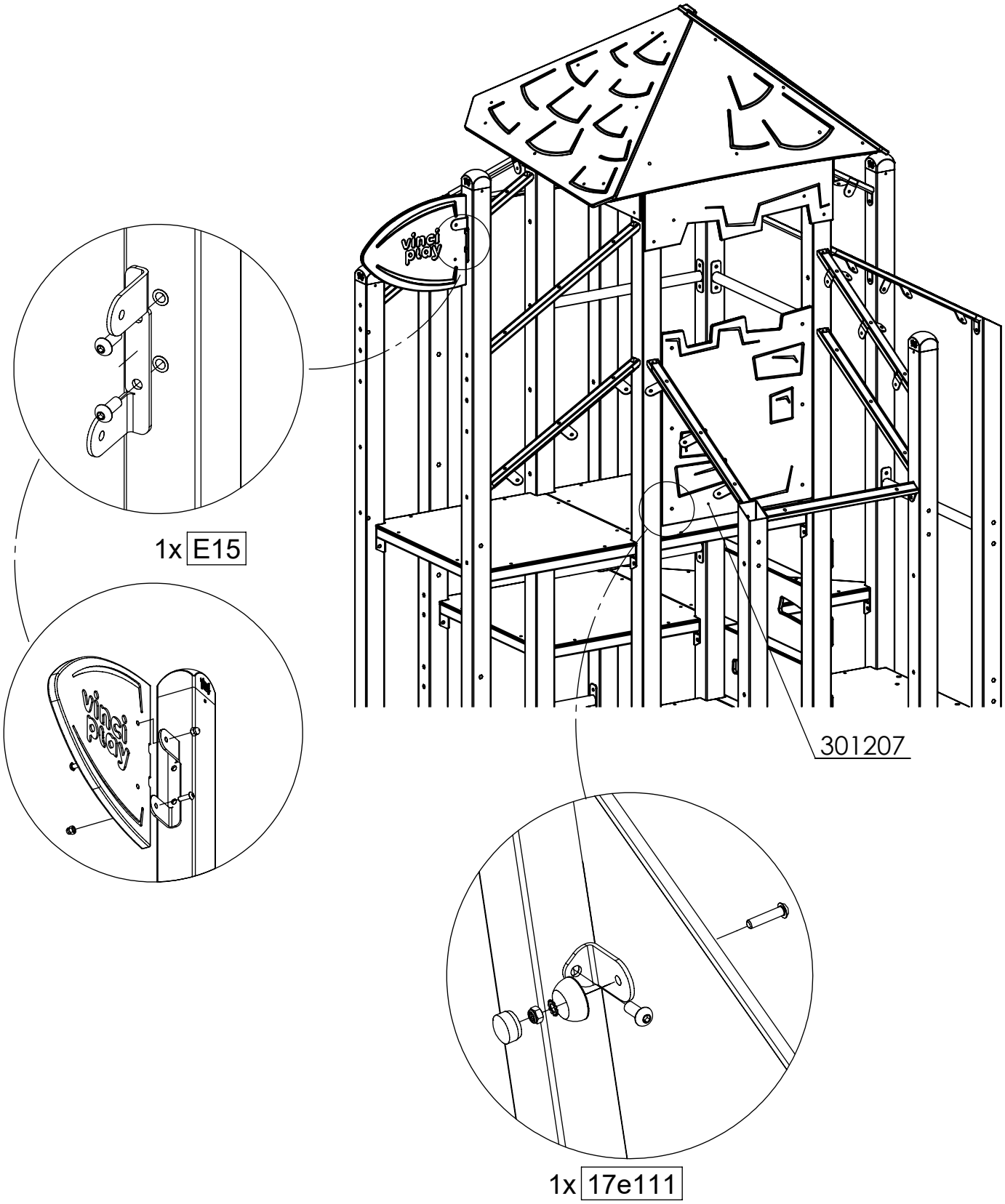

[cm]

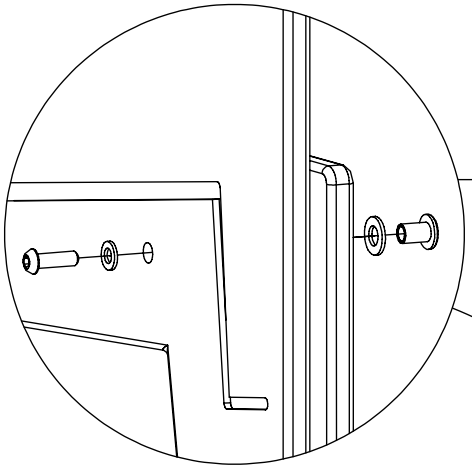

1x 30c108

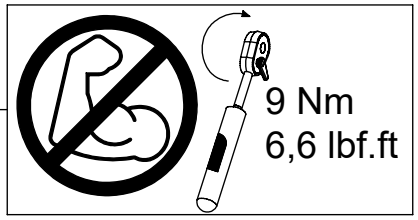

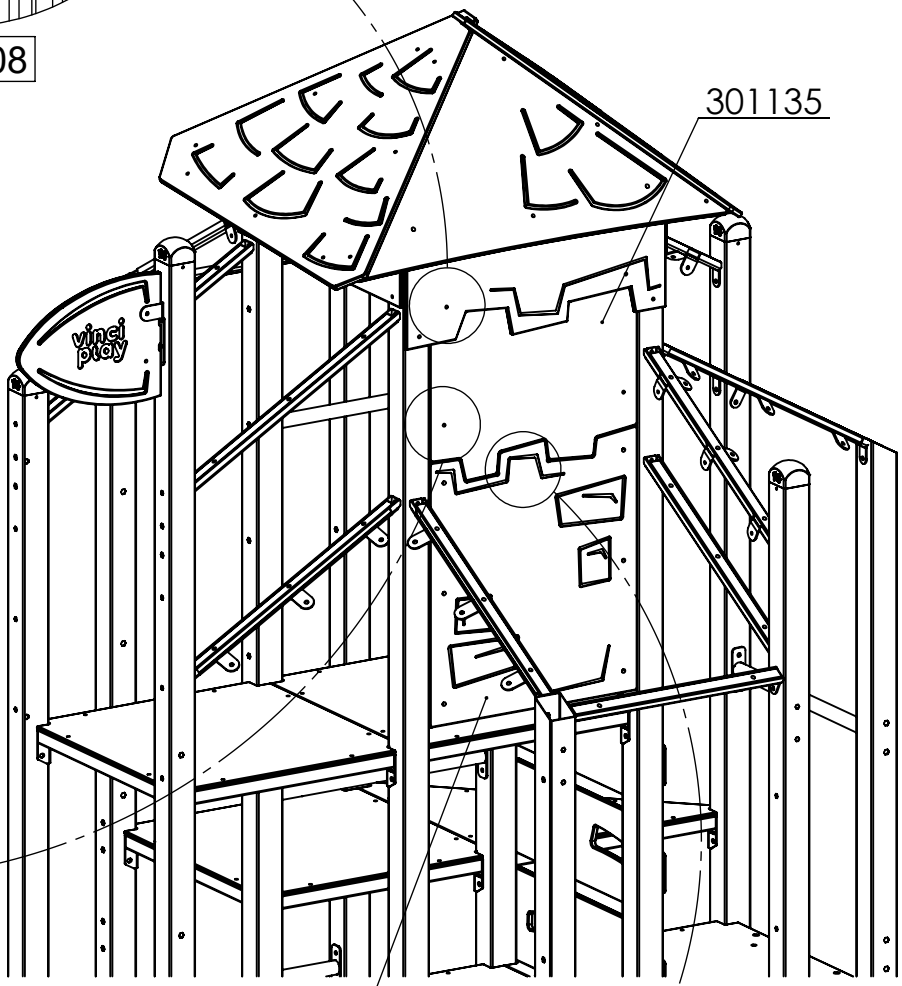

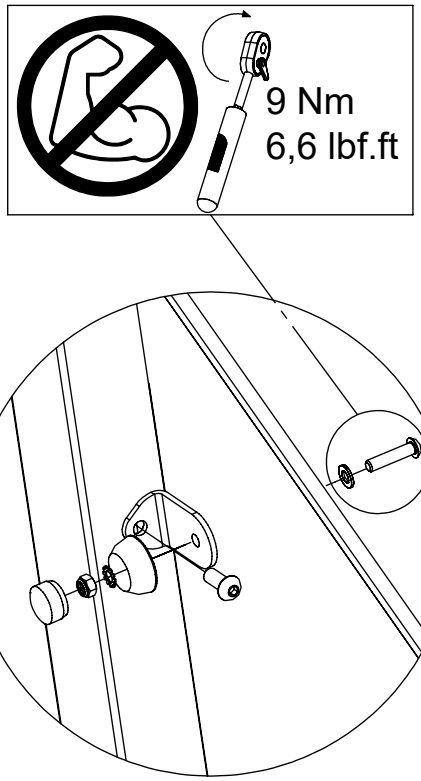

1x 30e058

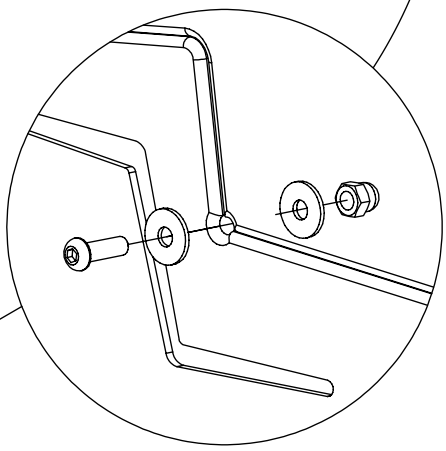

1x 30e057

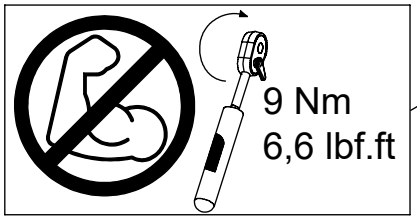

[cm]

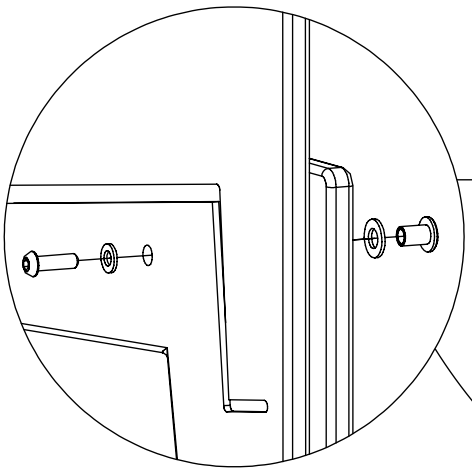

1x 30c108

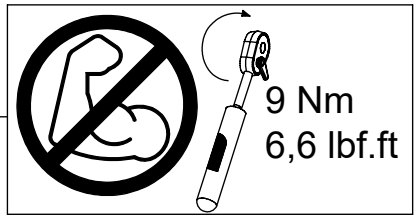

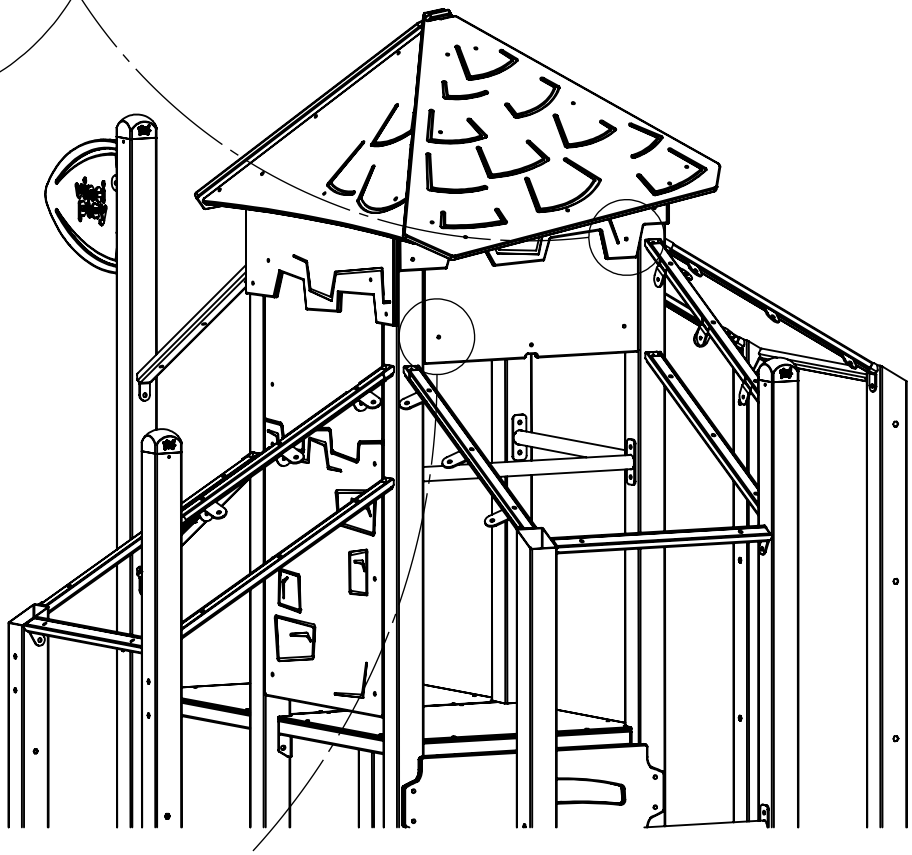

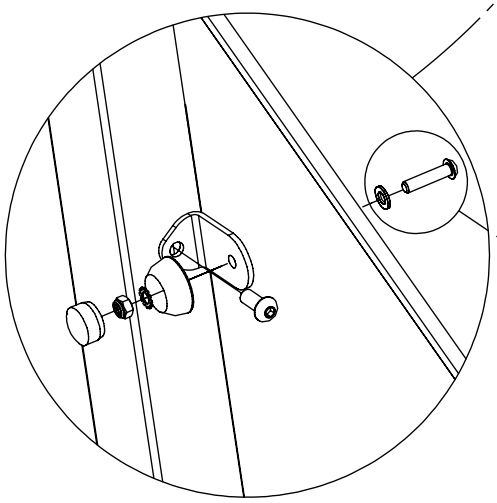

1x 30e058

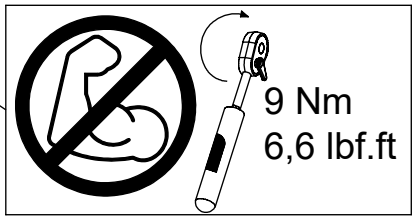

[cm]

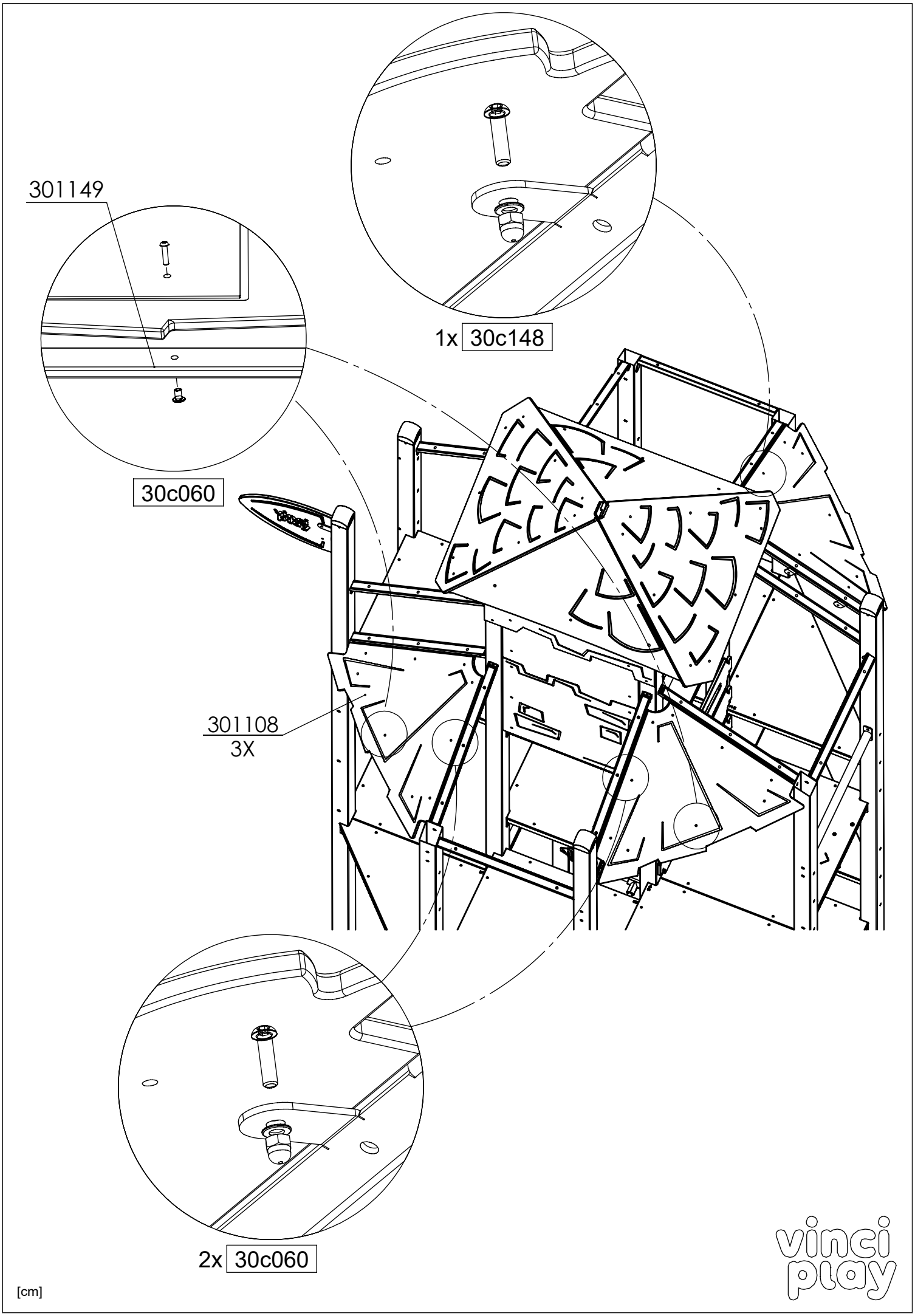
301149
30c060
1x 30c148
301108
3X
2x 30c060
[cm]
vinci play

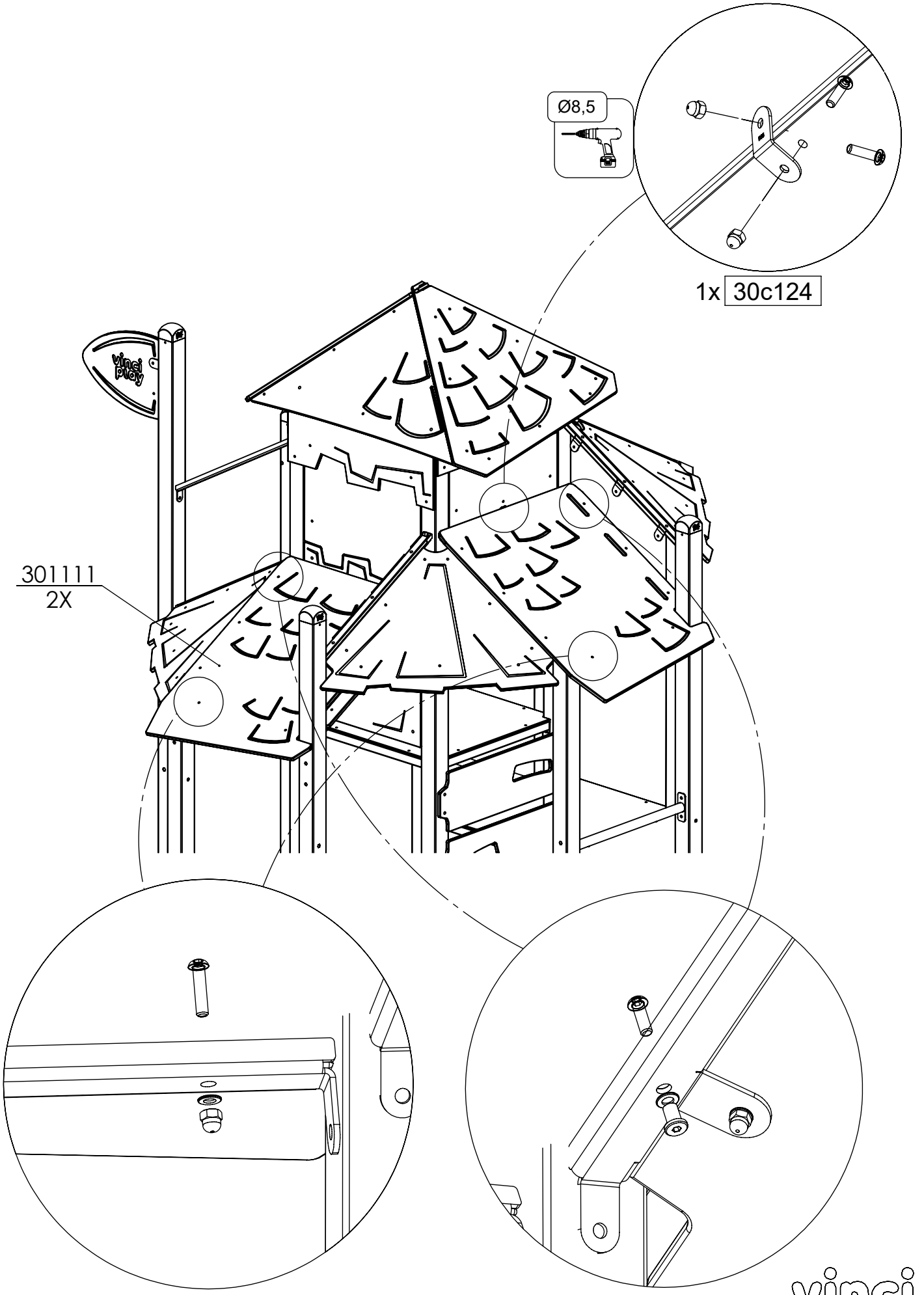
Ø8,5
1x 30c124
301111
2X
2x 30c070
2x 30c068
[cm]

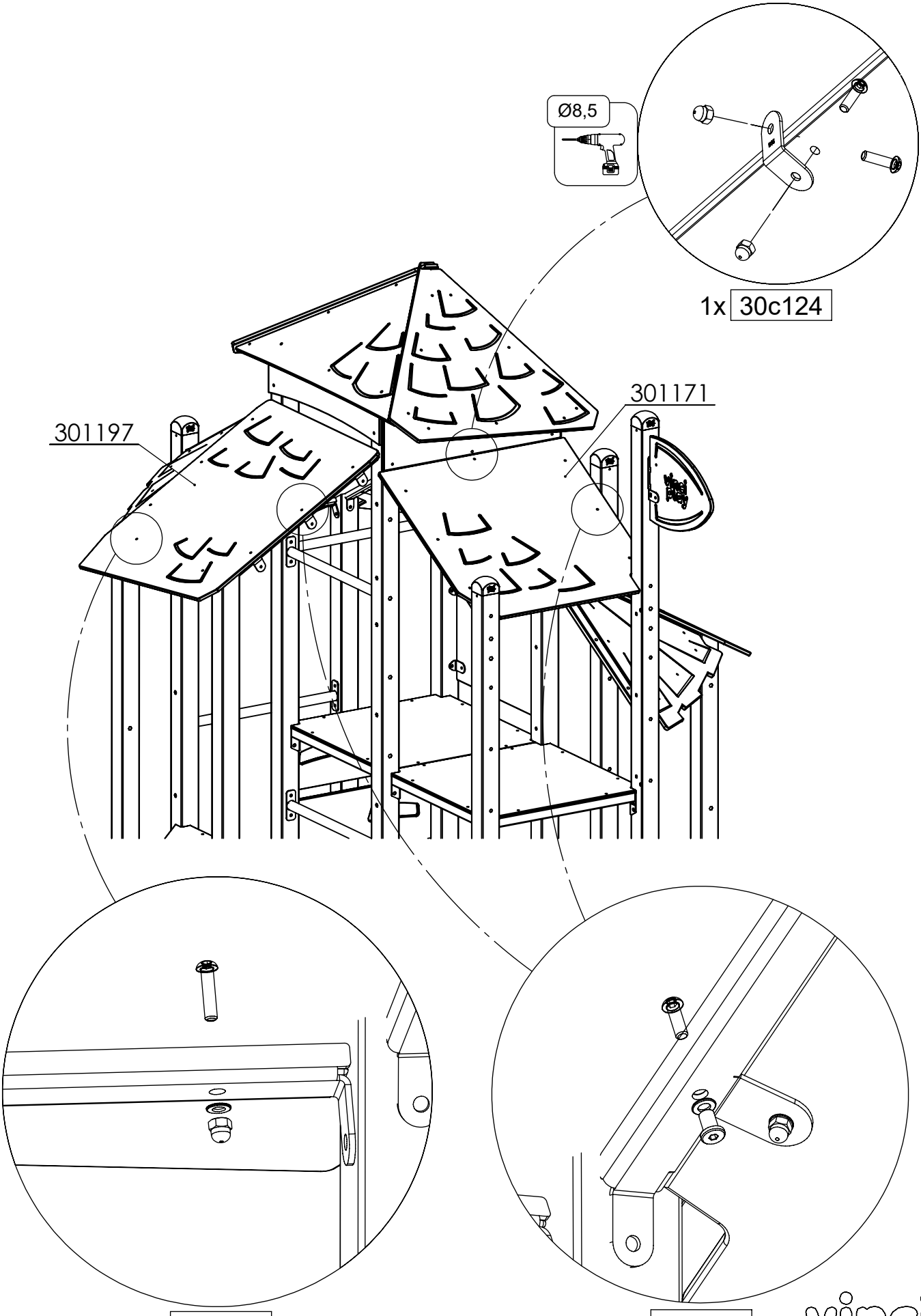
Ø8,5
1x 30c124
301171
301197
1x 30c068
2x 30c070
[cm]

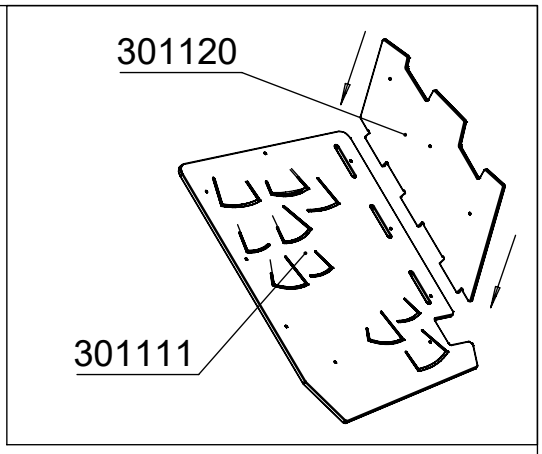

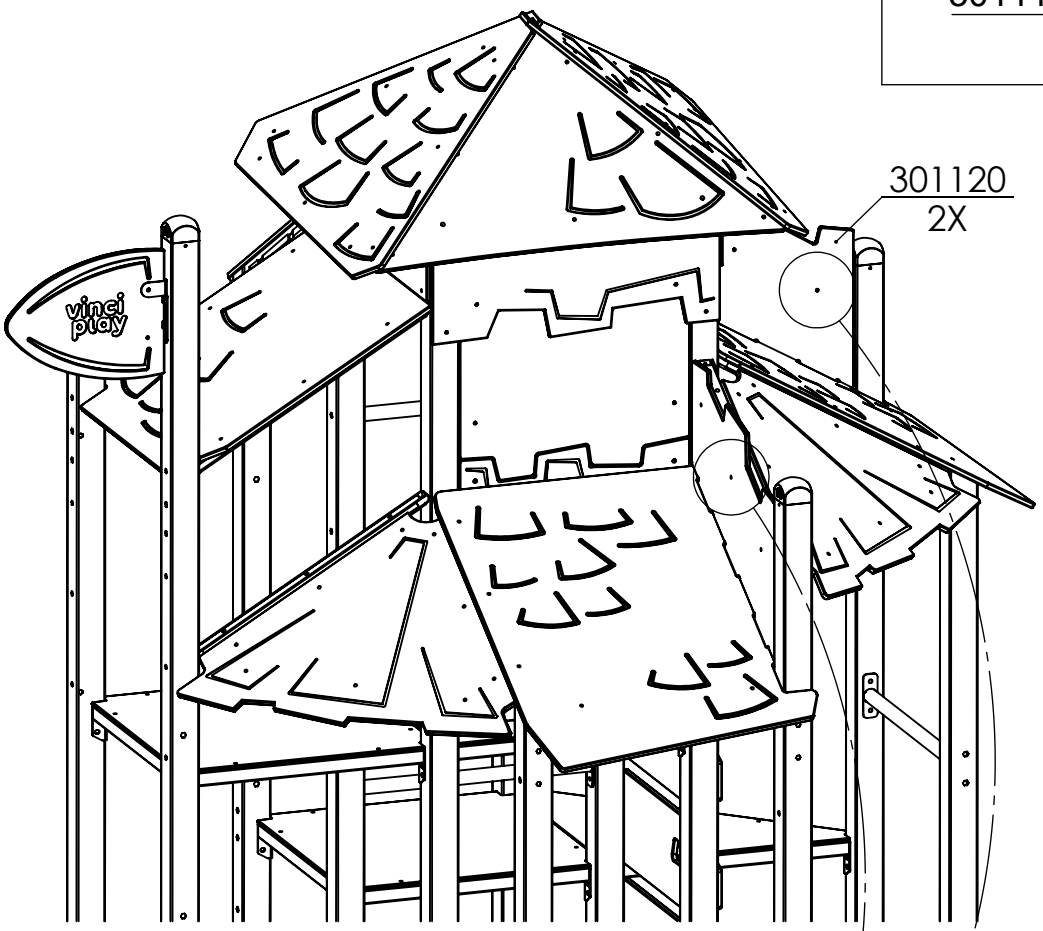

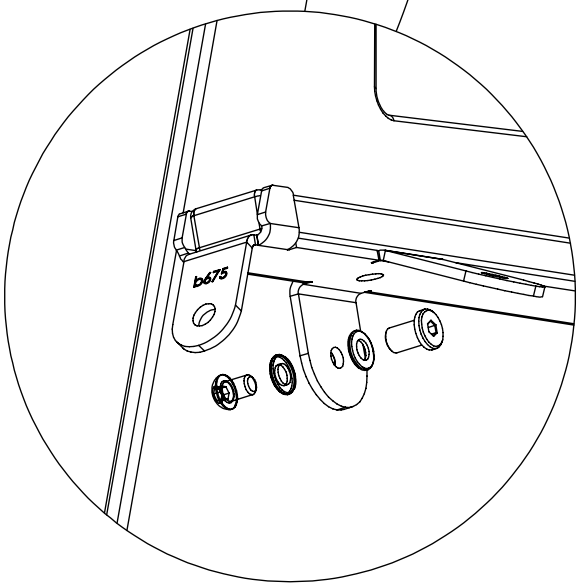

2x 30c106

[cm]

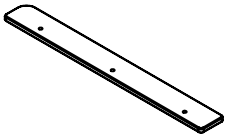

301119
x3

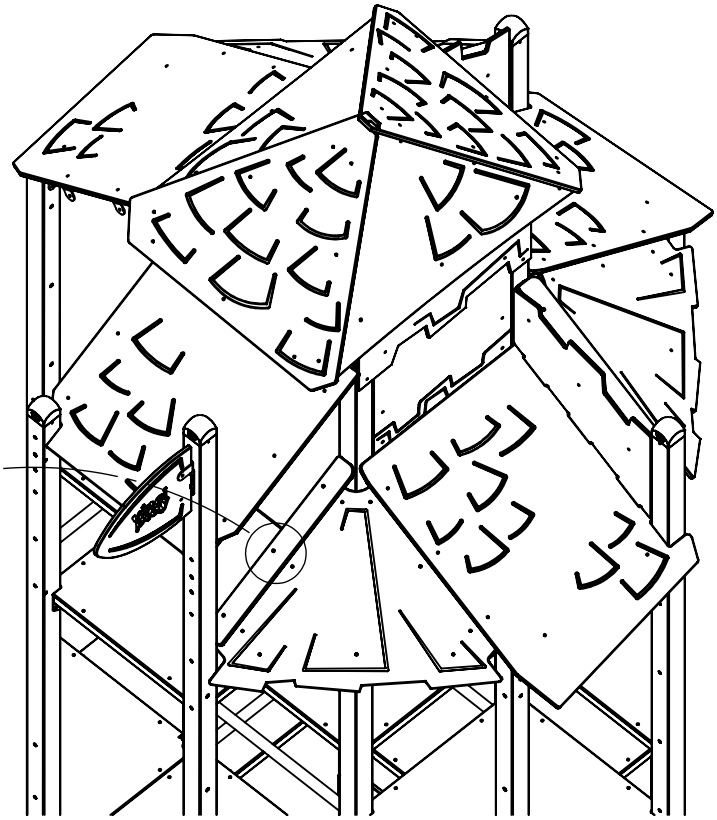

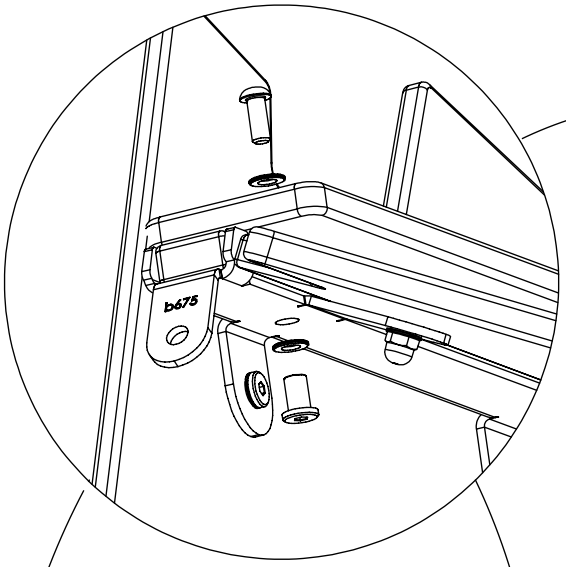

3x 30c110

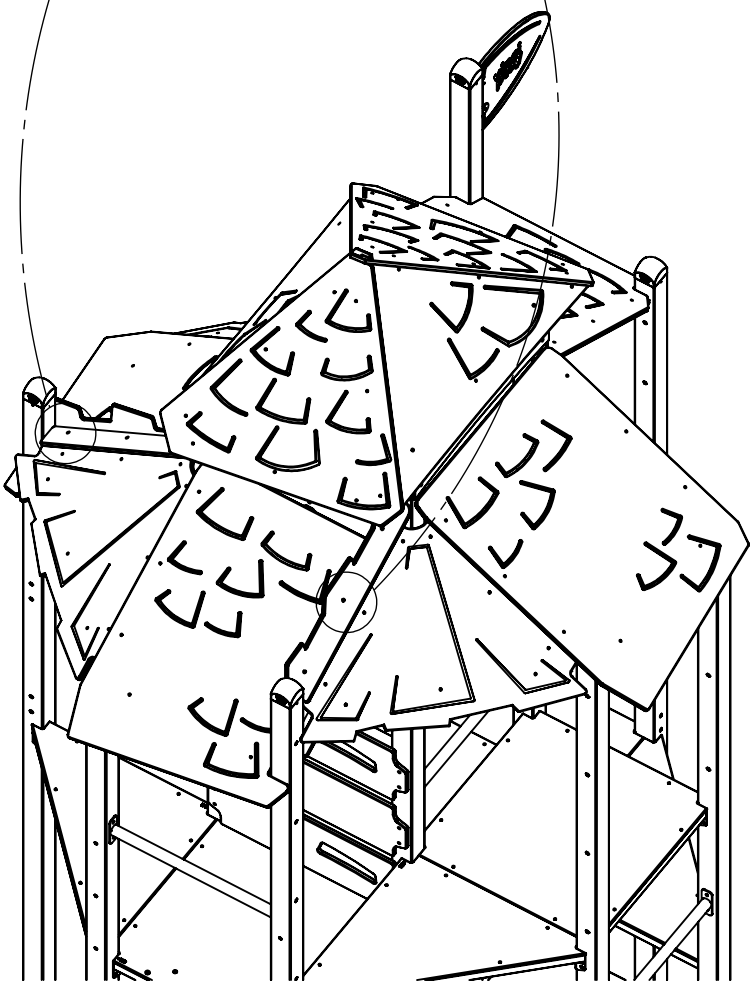

[cm]

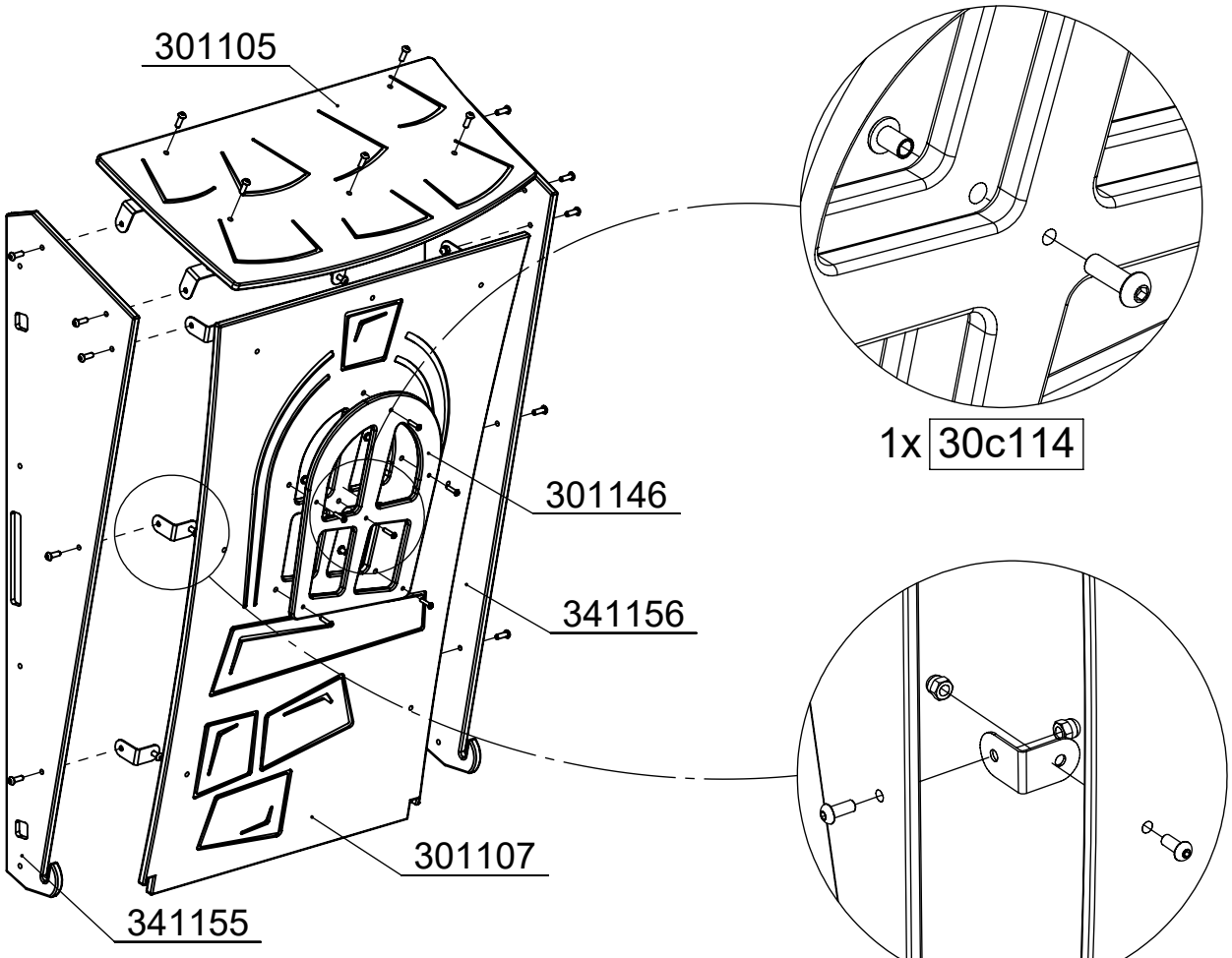

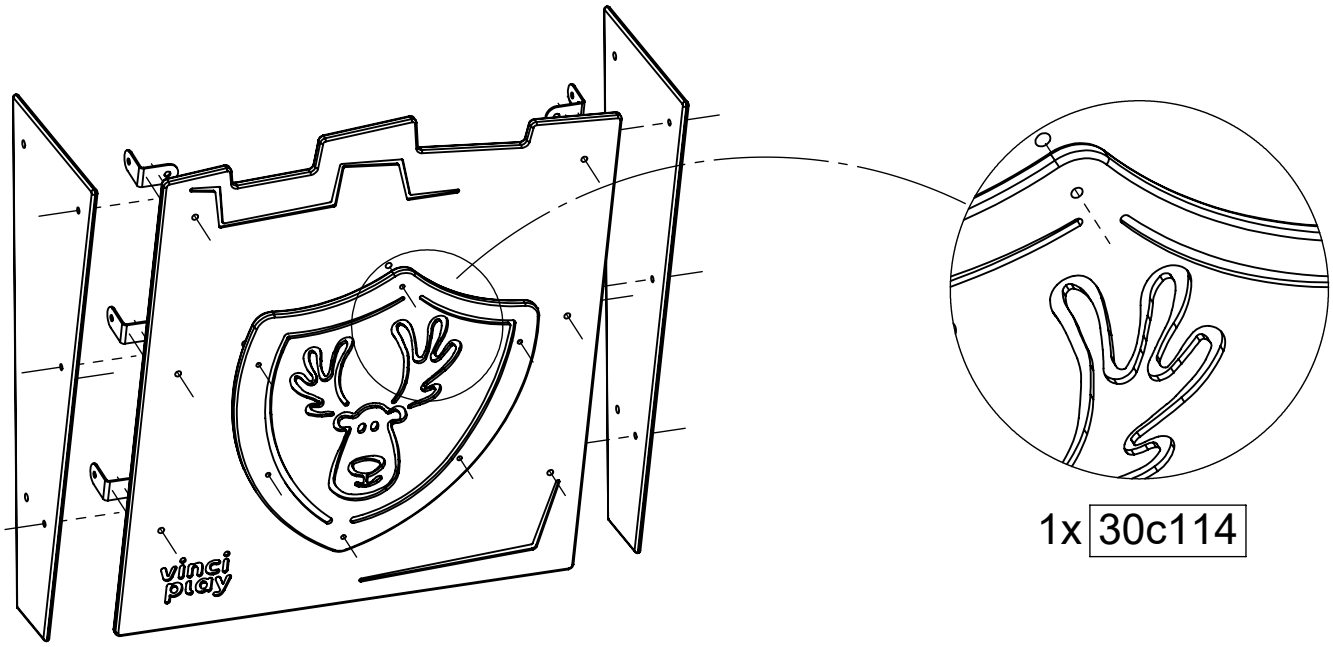

[cm]

vinci play

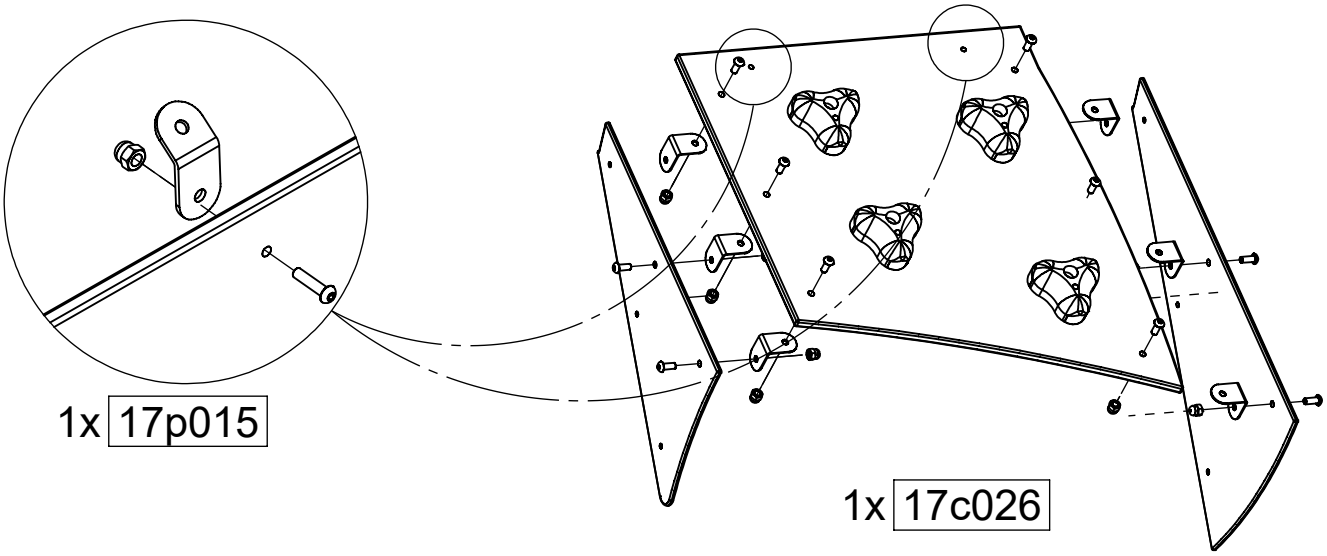

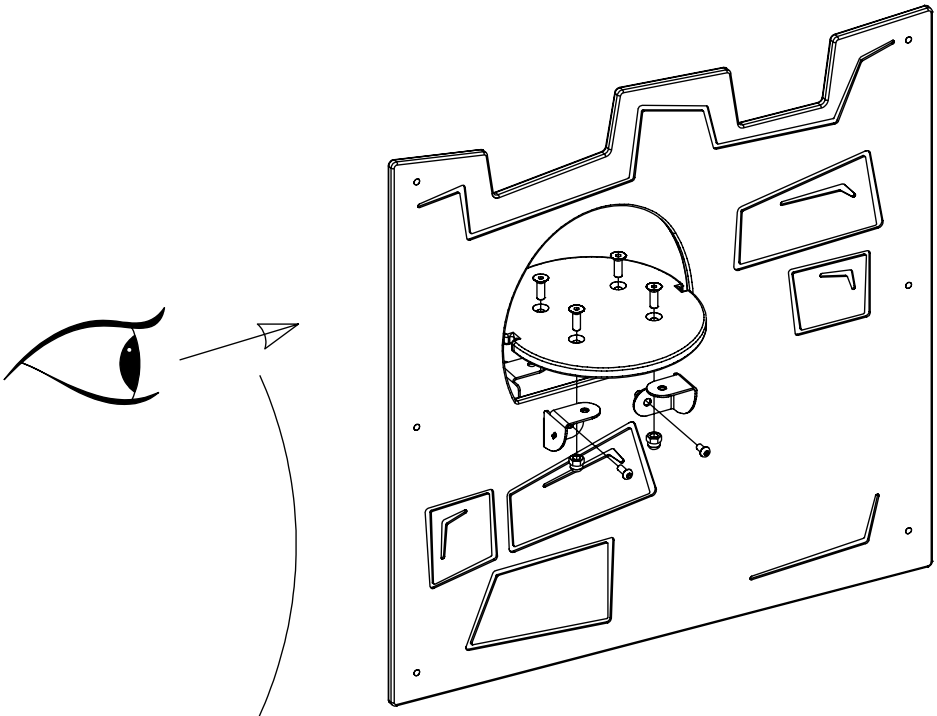

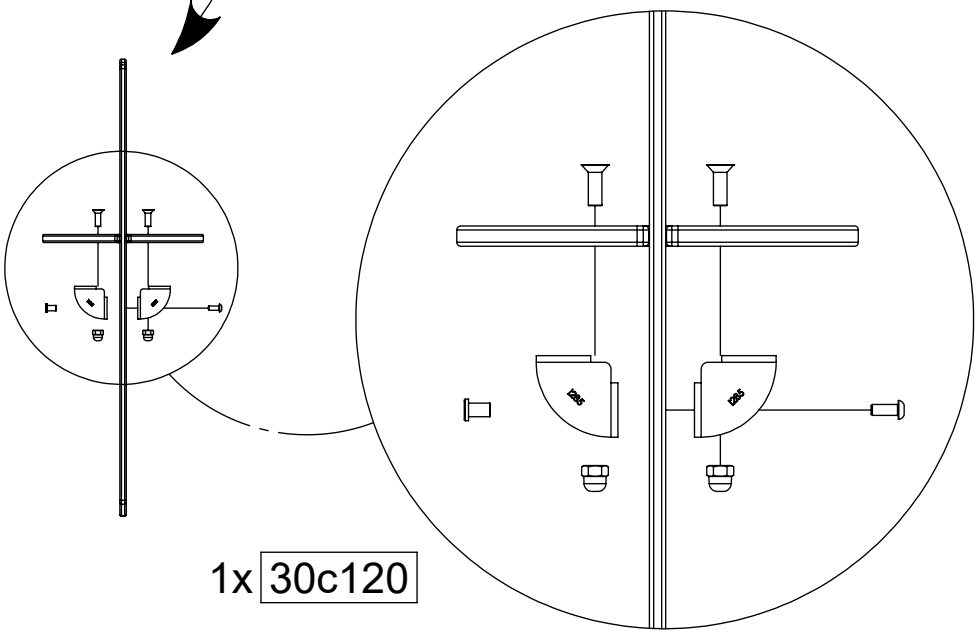

[cm]

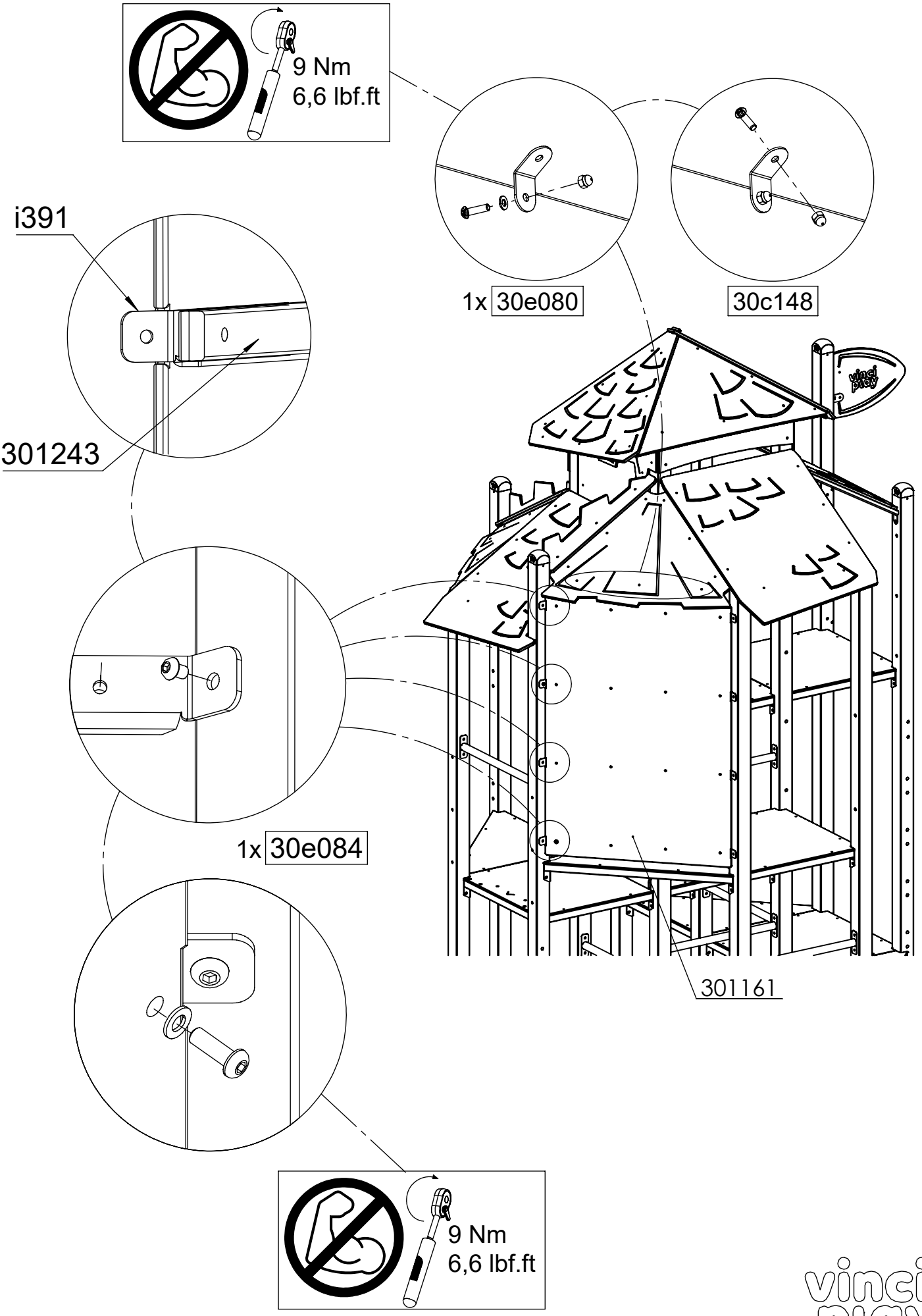
9 Nm
6,6 lbf.ft
1x 30e080
30c148
i391
301243
1x 30e084
301161
9 Nm
6,6 lbf.ft
[cm]

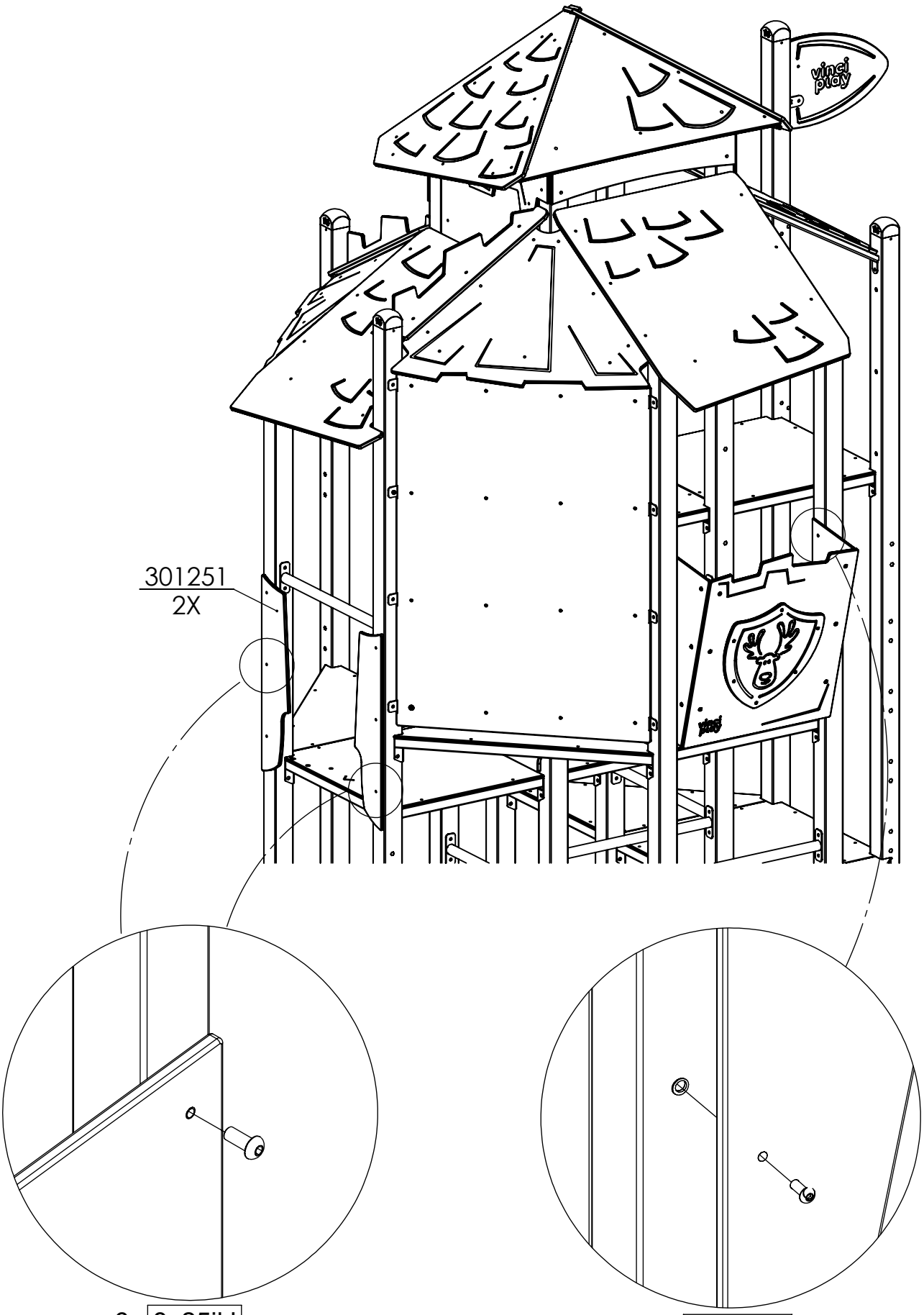

[cm]

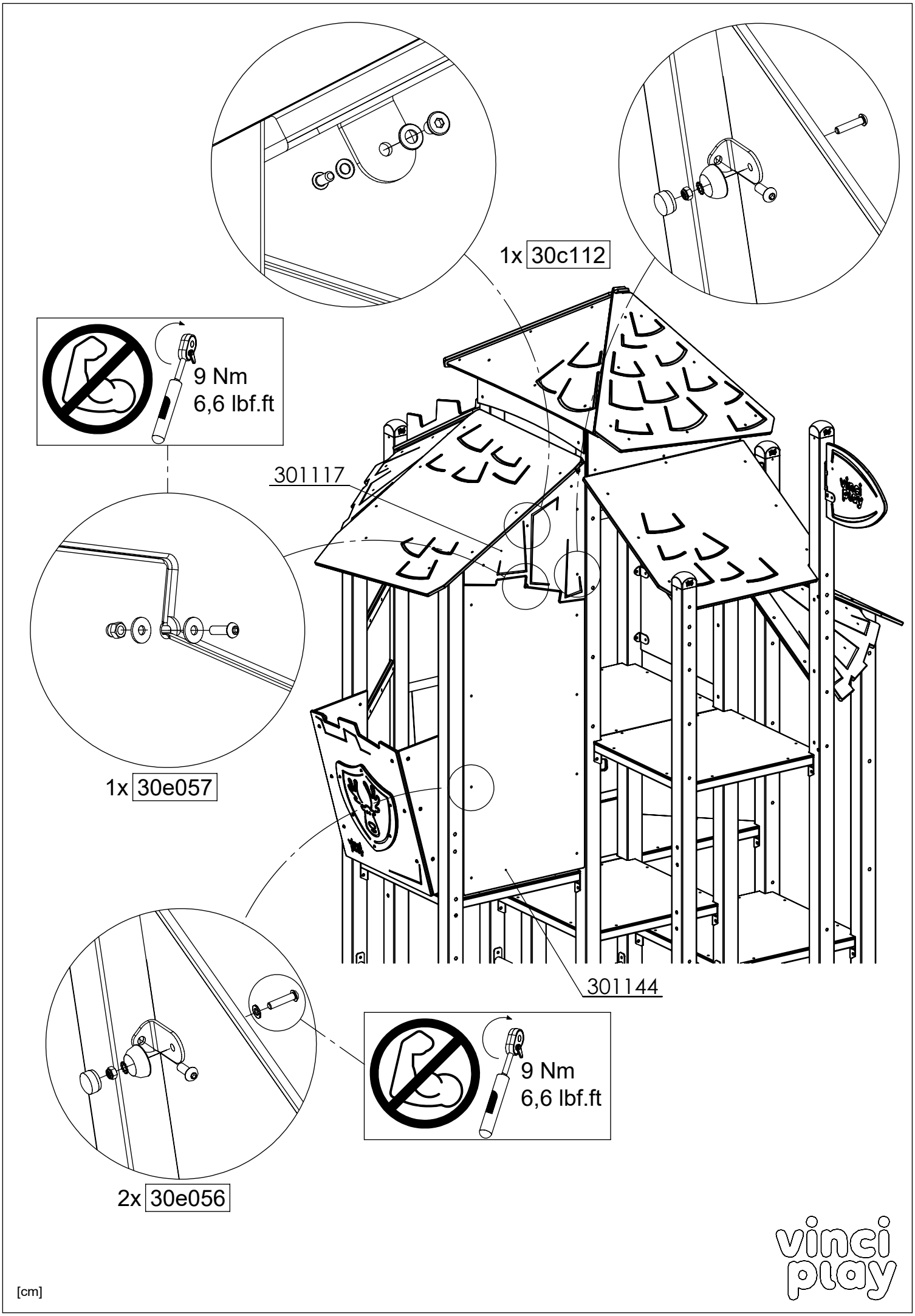
1x 30c112
9 Nm
6,6 lbf.ft
301117
1x 30e057
301144
9 Nm
6,6 lbf.ft
2x 30e056
[cm]
vinci play

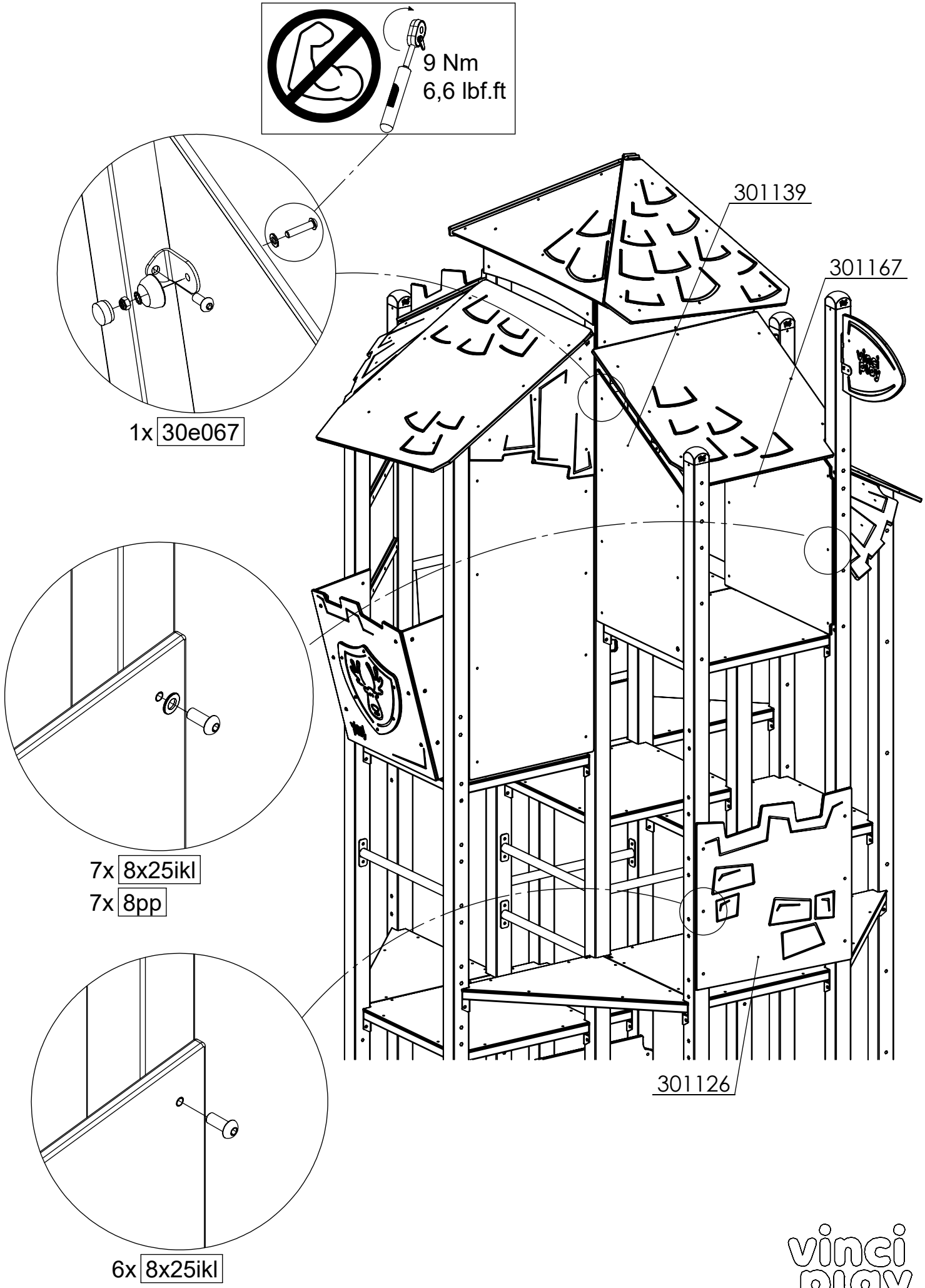
9 Nm
6,6 lbf.ft
301139
301167
1x 30e067
7x 8x25ikl
7x 8pp
301126
6x 8x25ikl
[cm]
vinci play

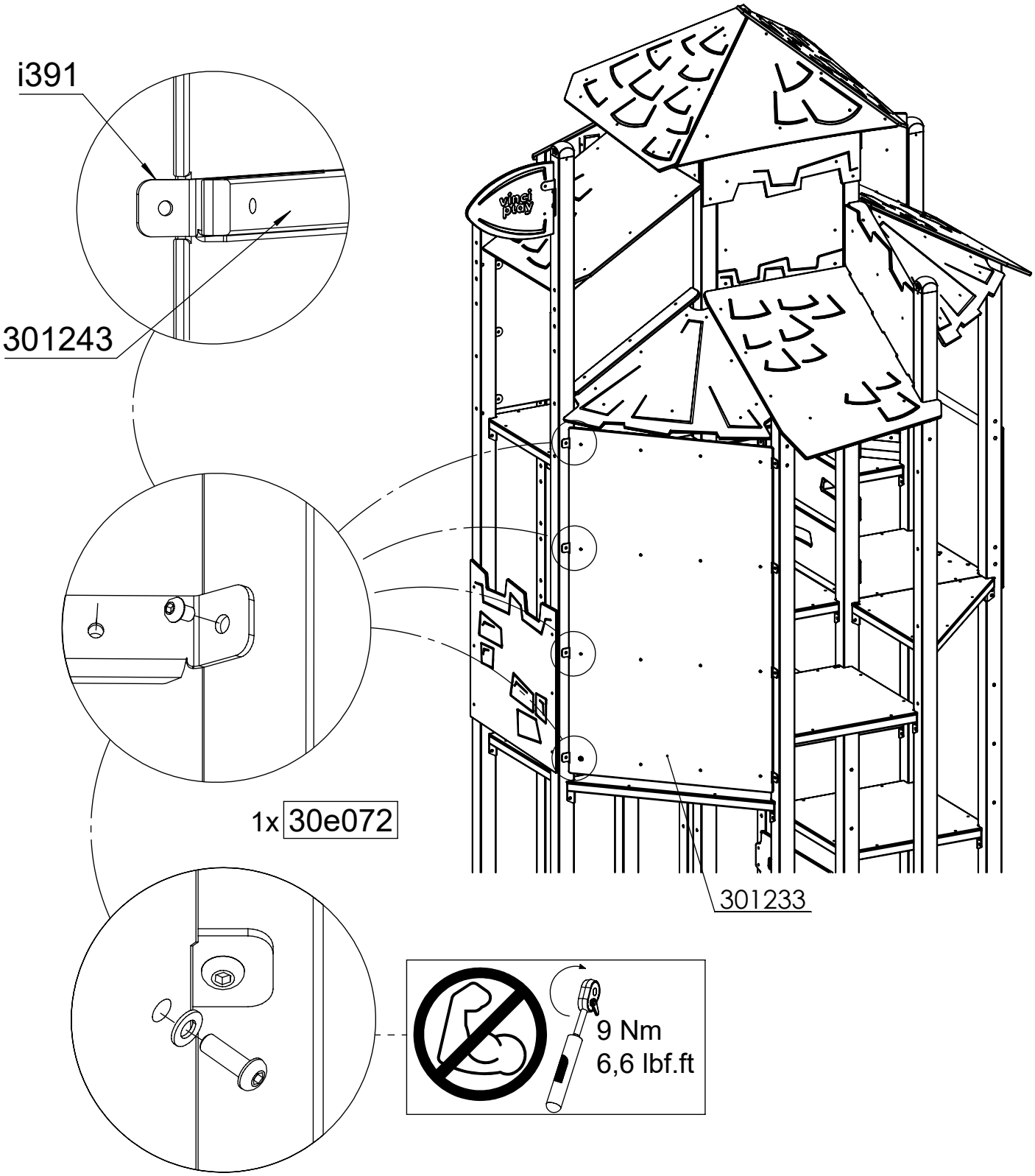

[cm]

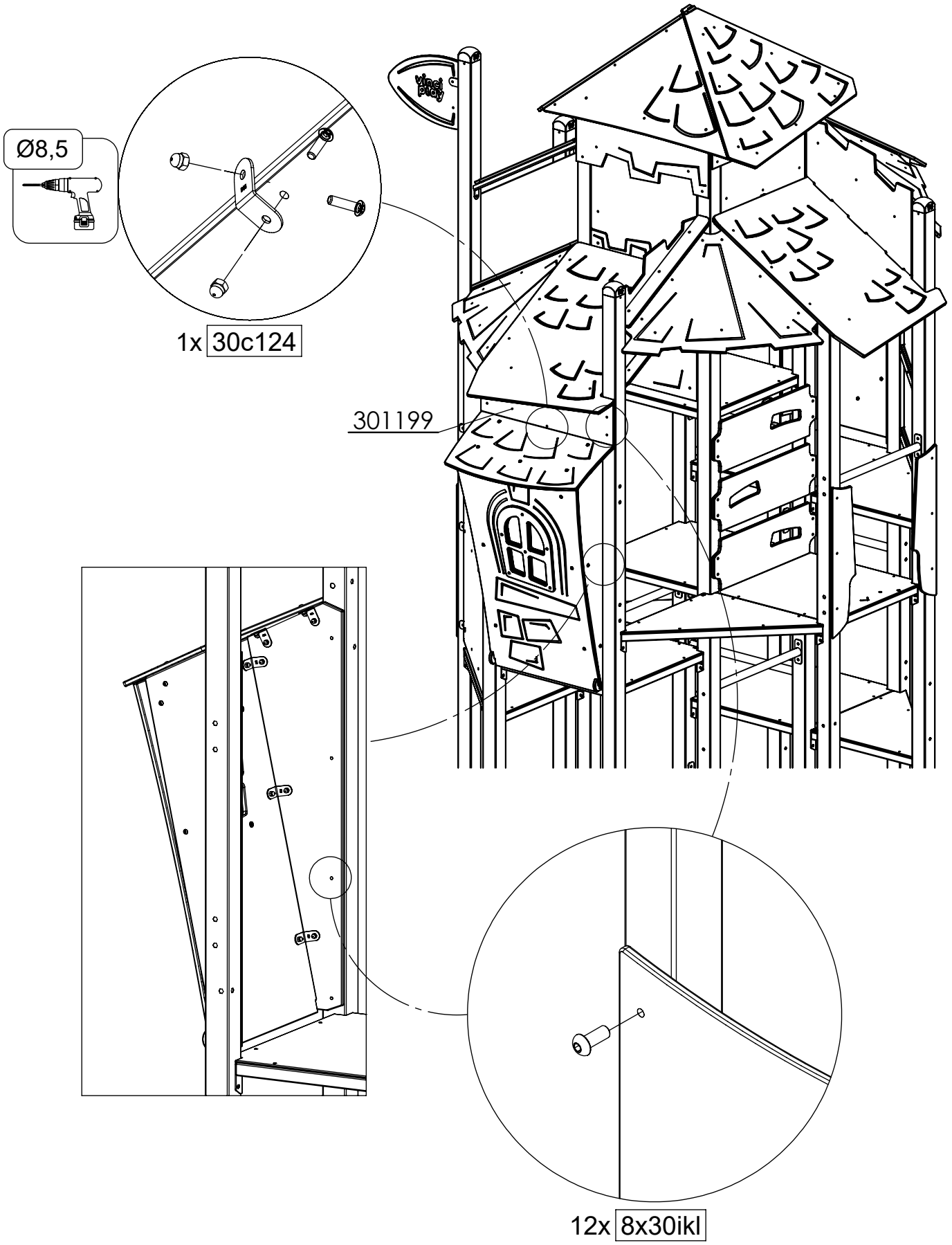

[cm]

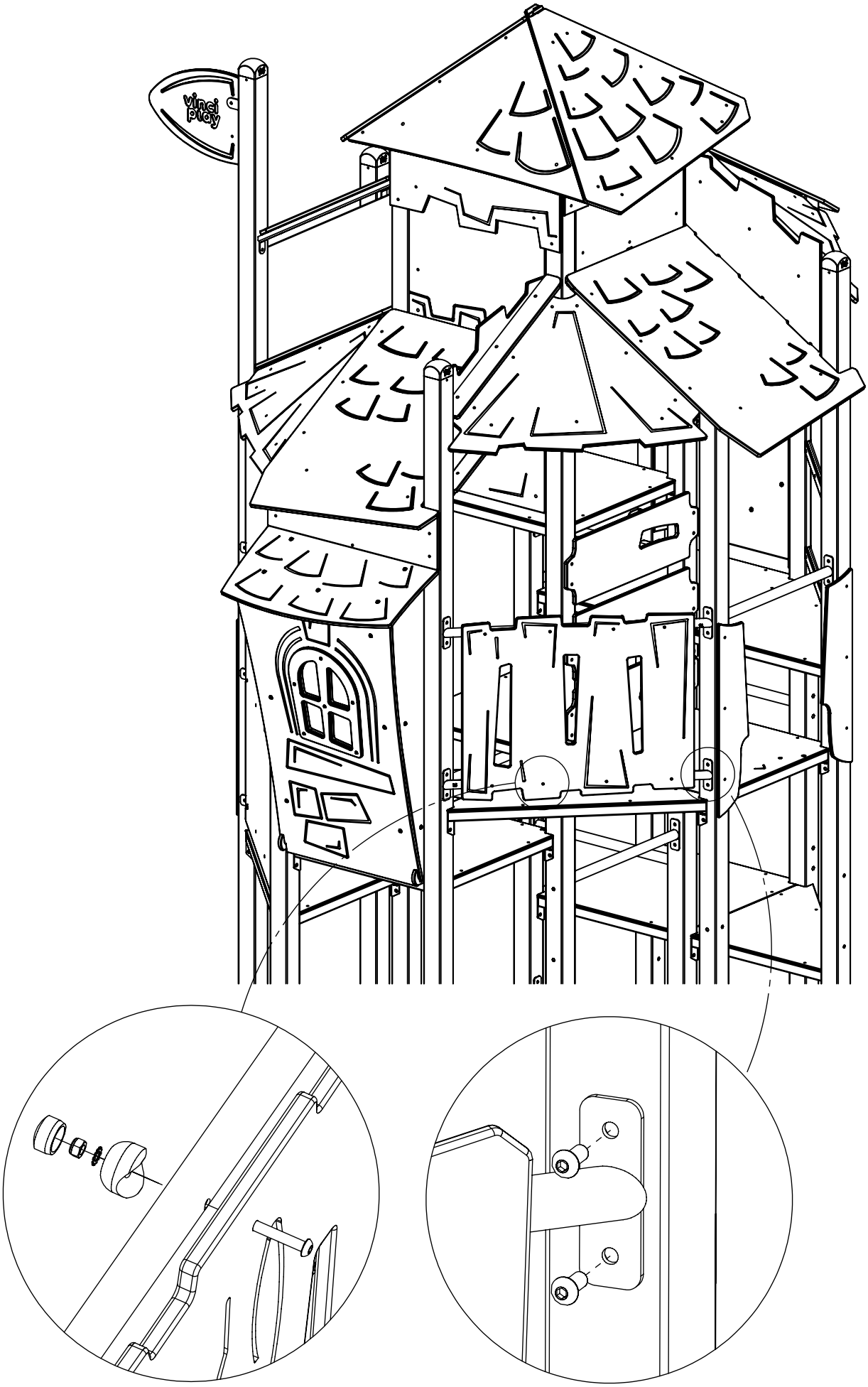

[cm]

vinci play

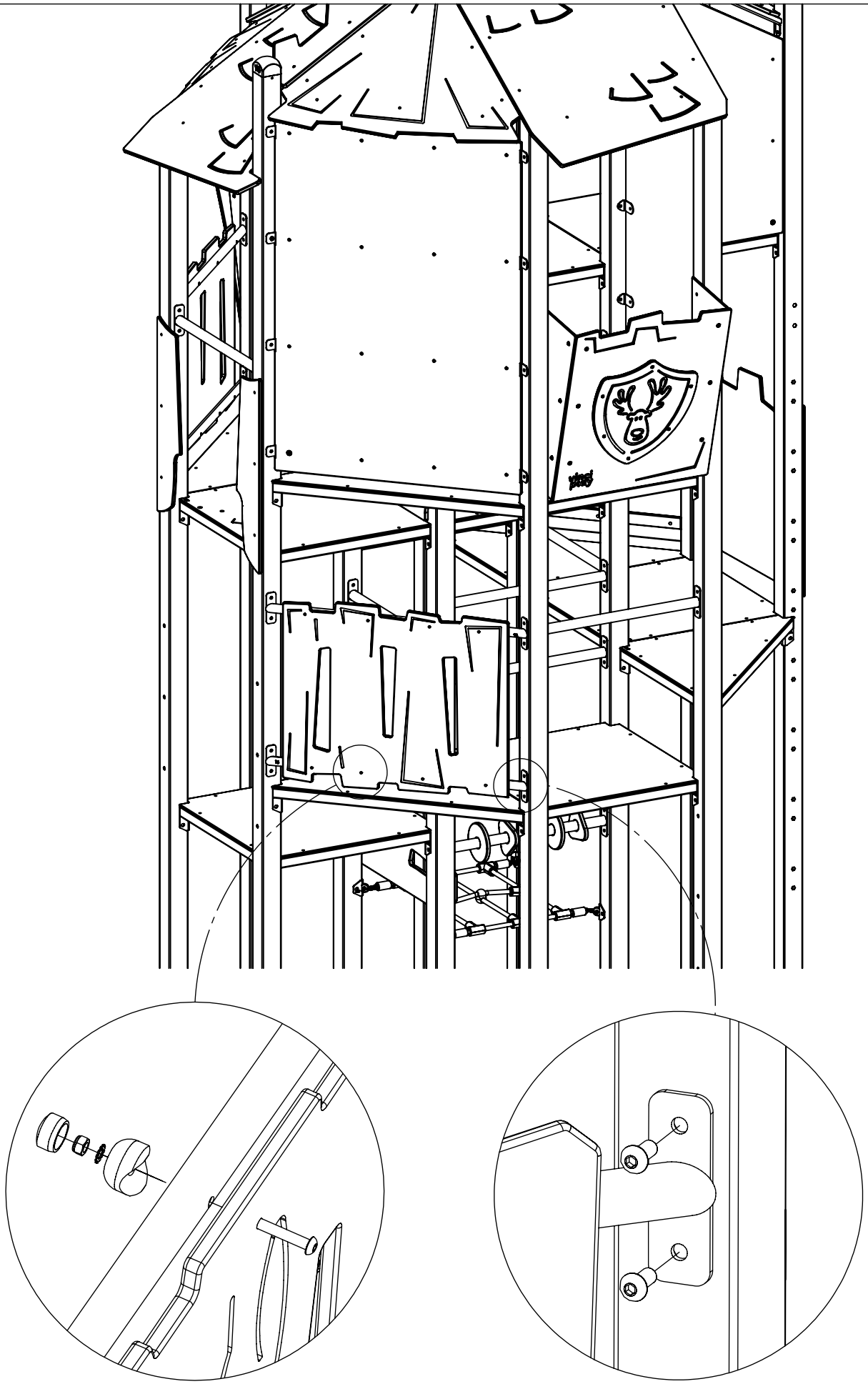

1x 30c006

8x 10x25ikl

[cm]

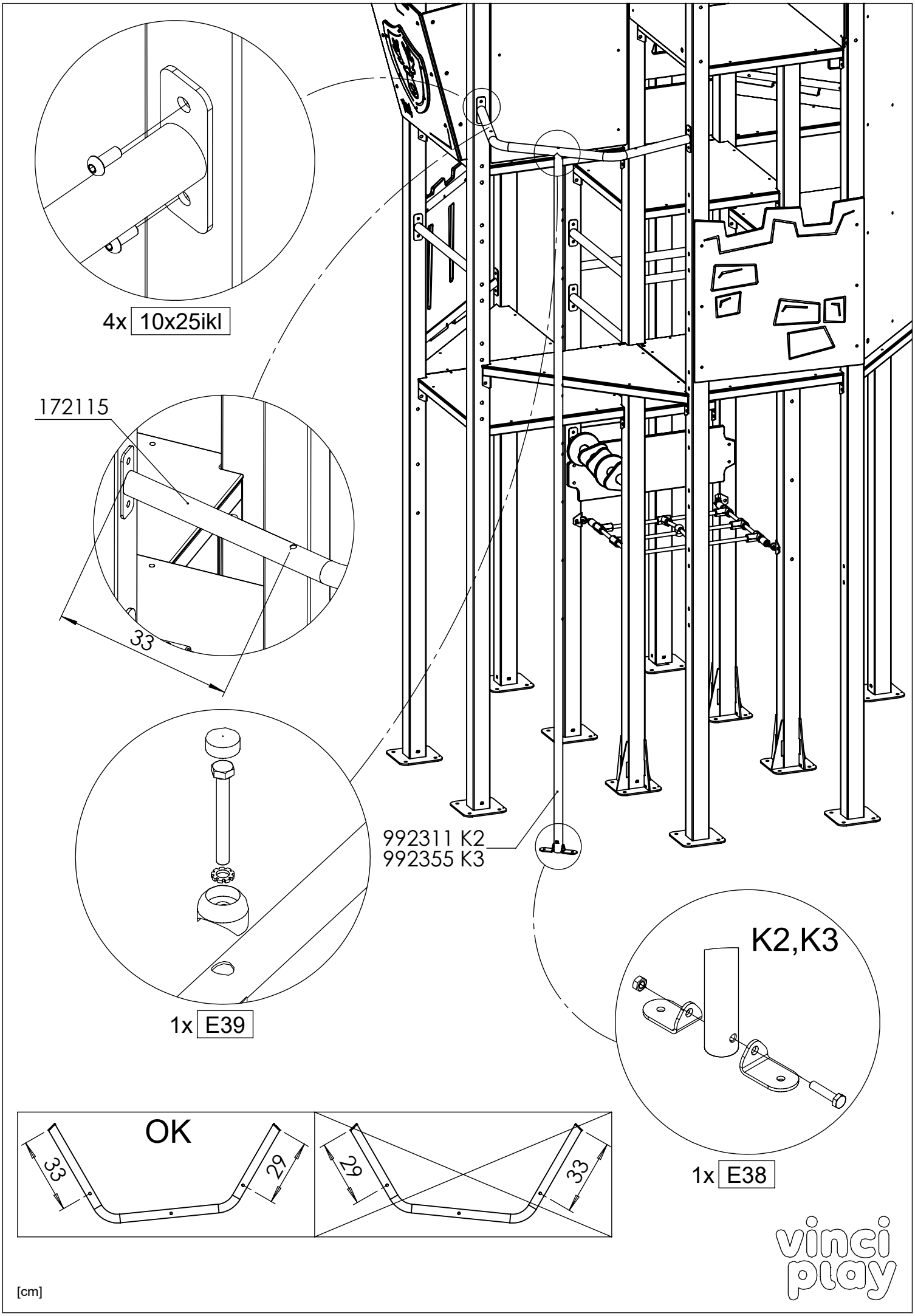
4x 10x25ikl
172115
33
992311 K2
992355 K3
1x E39
K2,K3
1x E38
OK
33
29
29
33
[cm]
vinci play

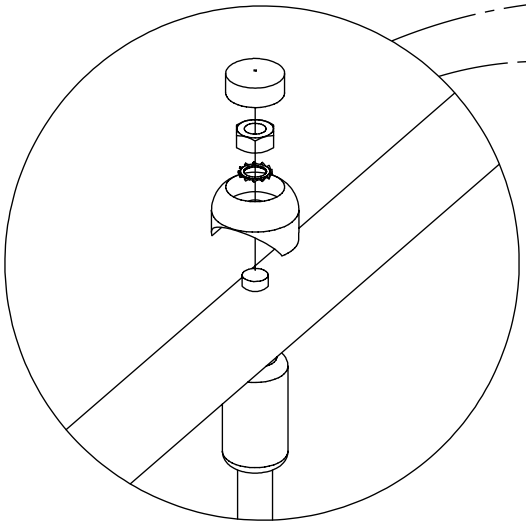

1x 30e016
1x 30e019

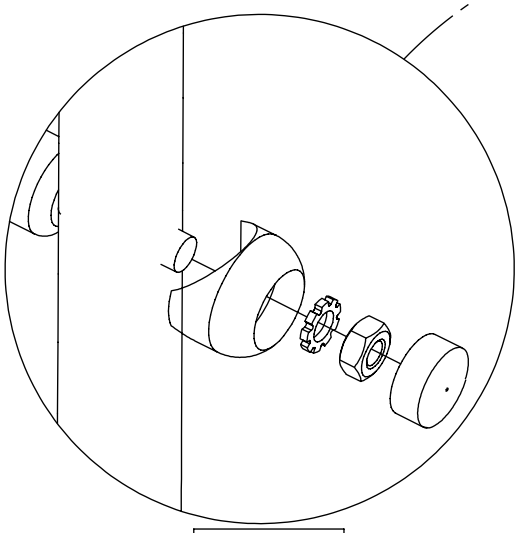

1x 30e075
26x 10x25ikl
26x 10pp

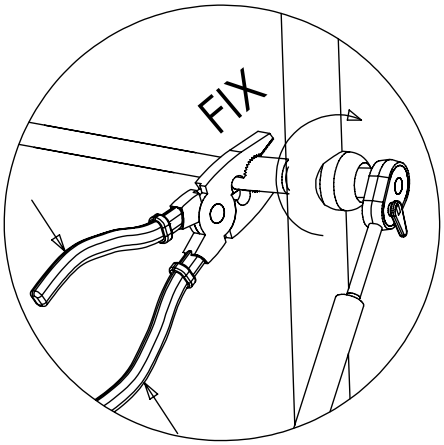

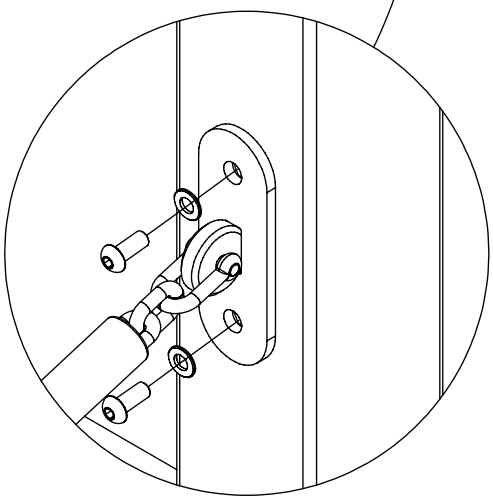

30e016
30e019

[cm]

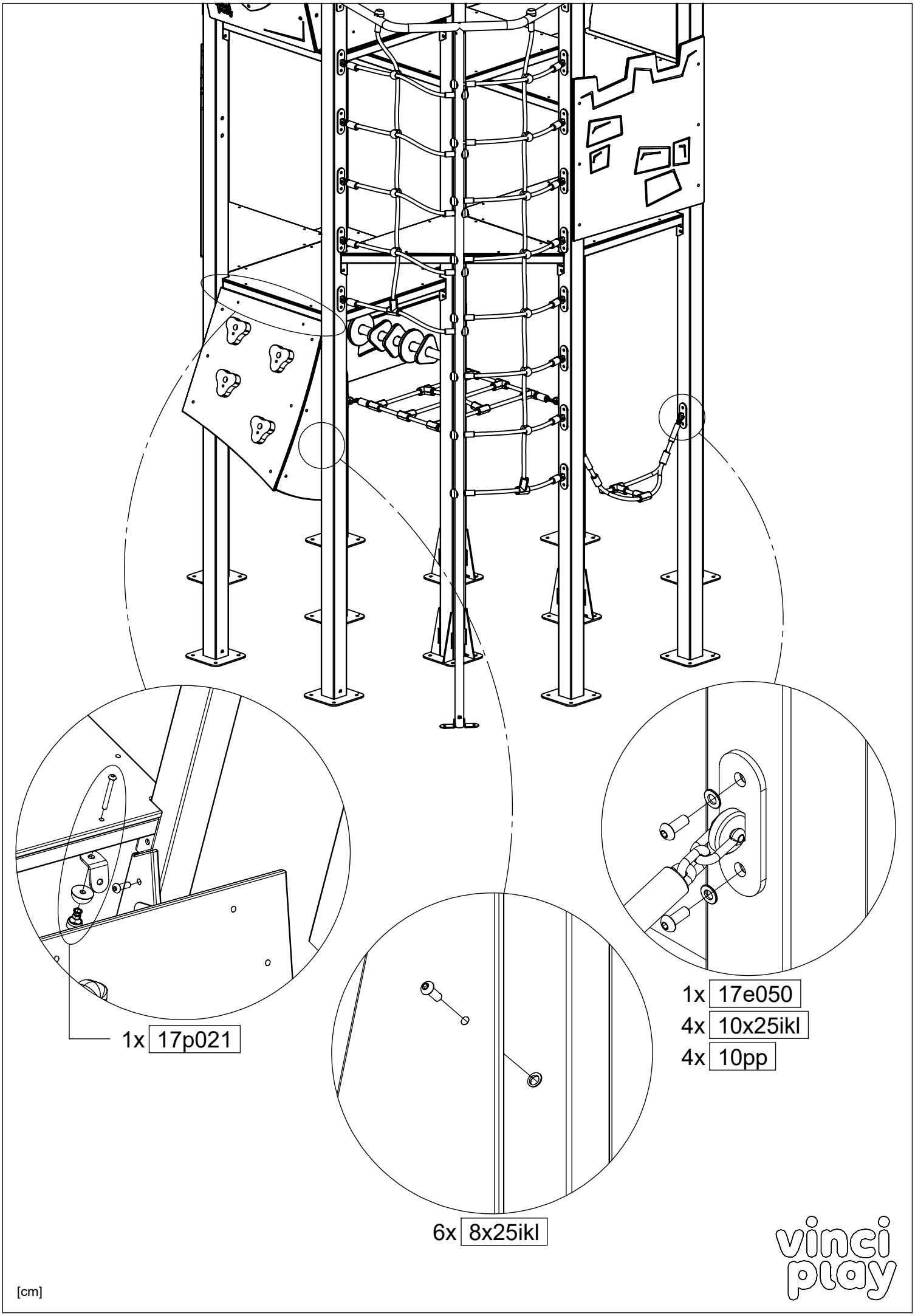
1x 17p021
6x 8x25ikl
1x 17e050
4x 10x25ikl
4x 10pp
[cm]
vinci play

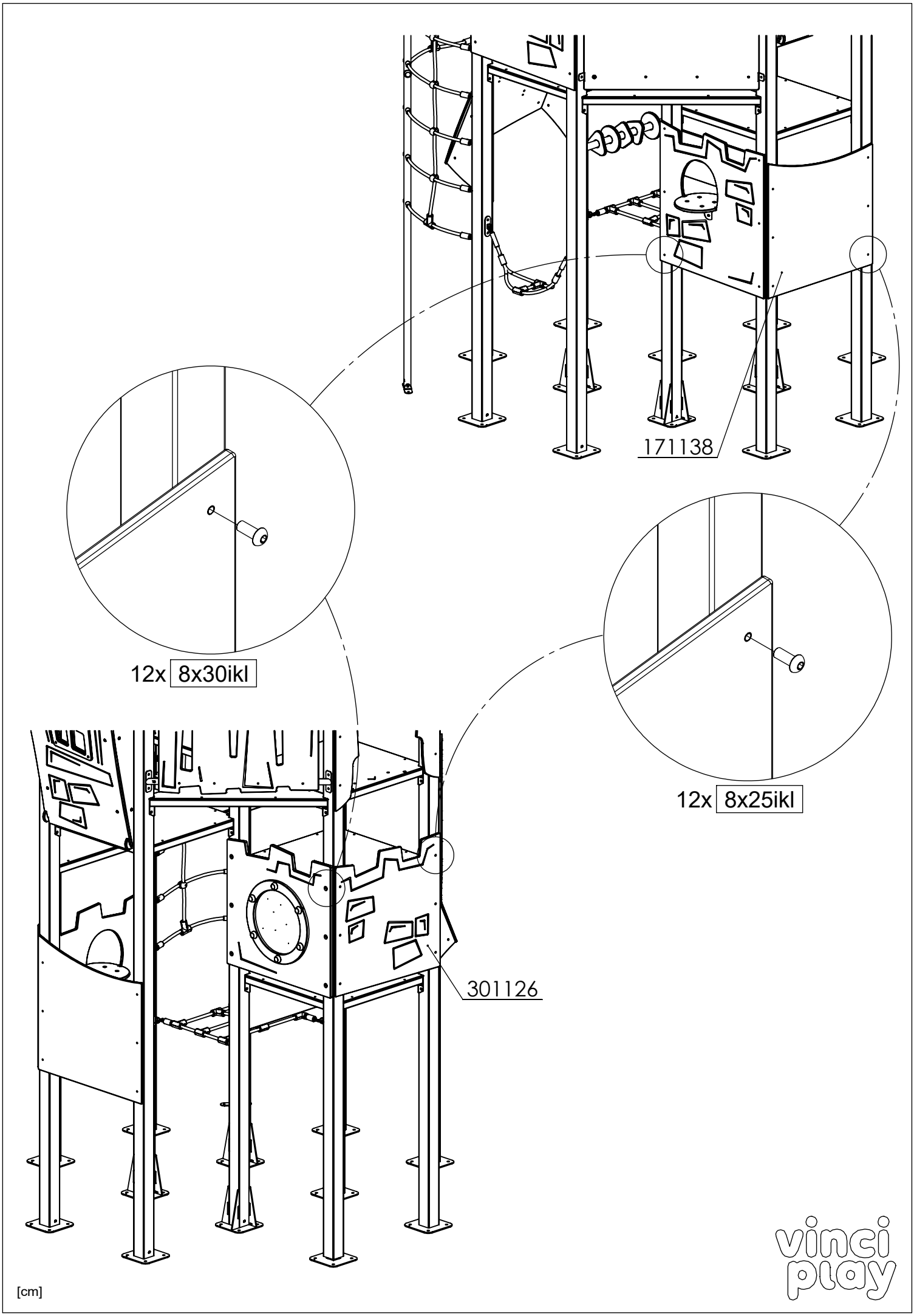
171138
12x 8x30ikl
12x 8x25ikl
301126
[cm]
vinci play

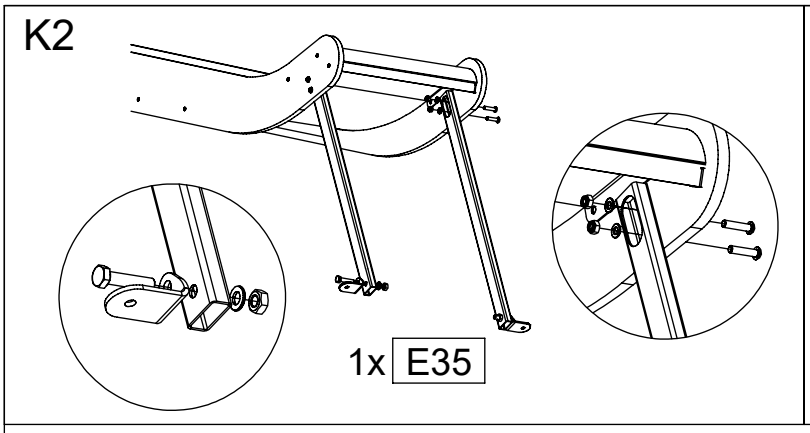

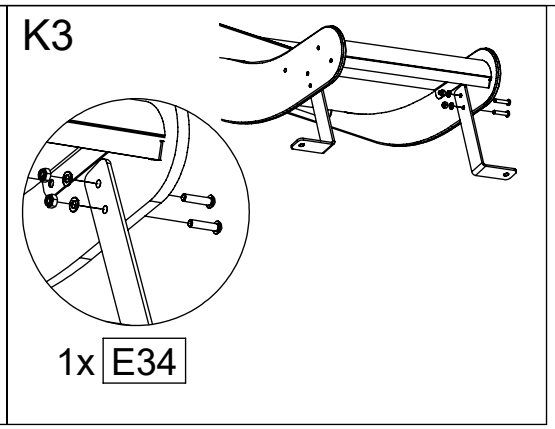

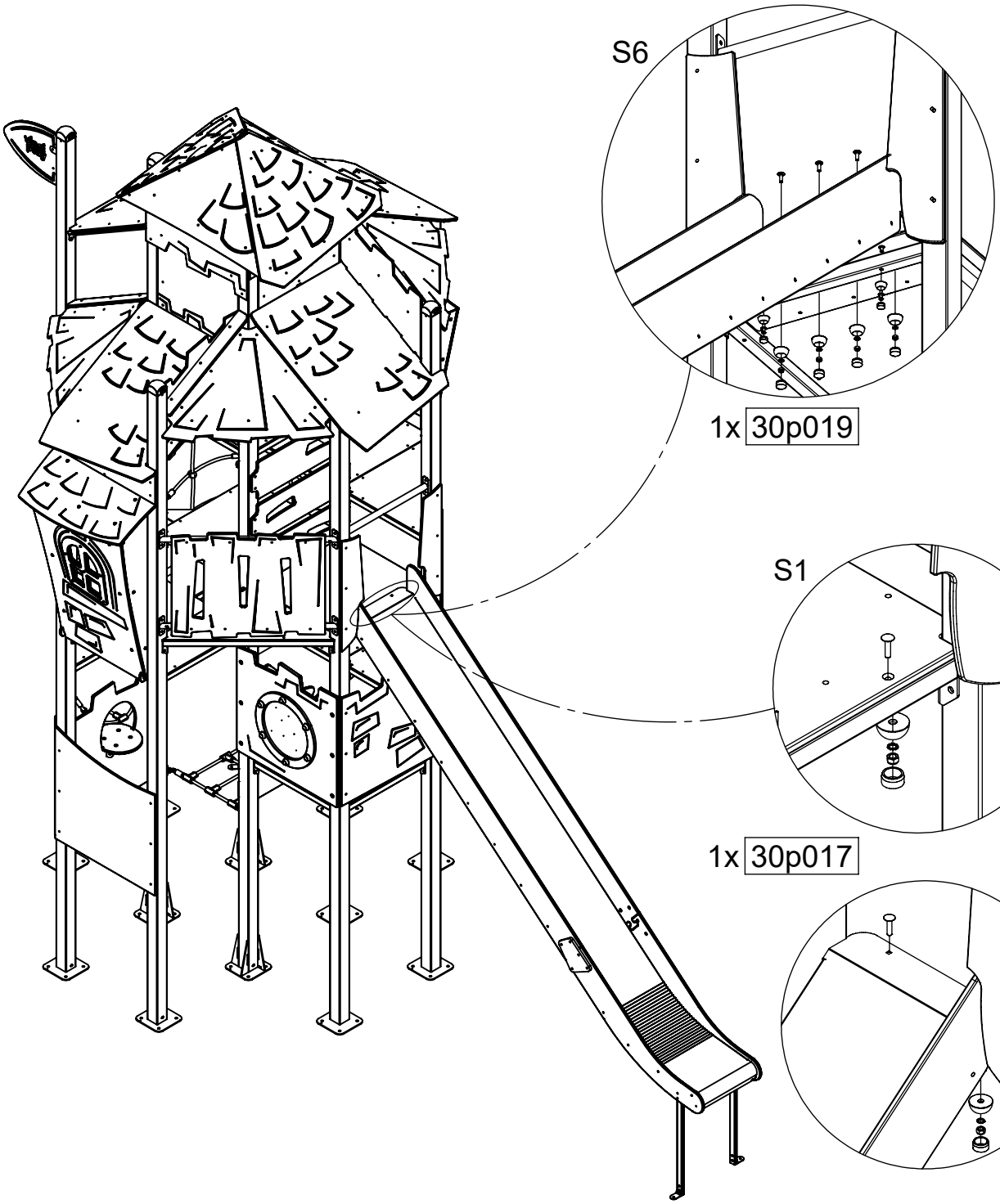

[cm]

vinci play

3060-1.03

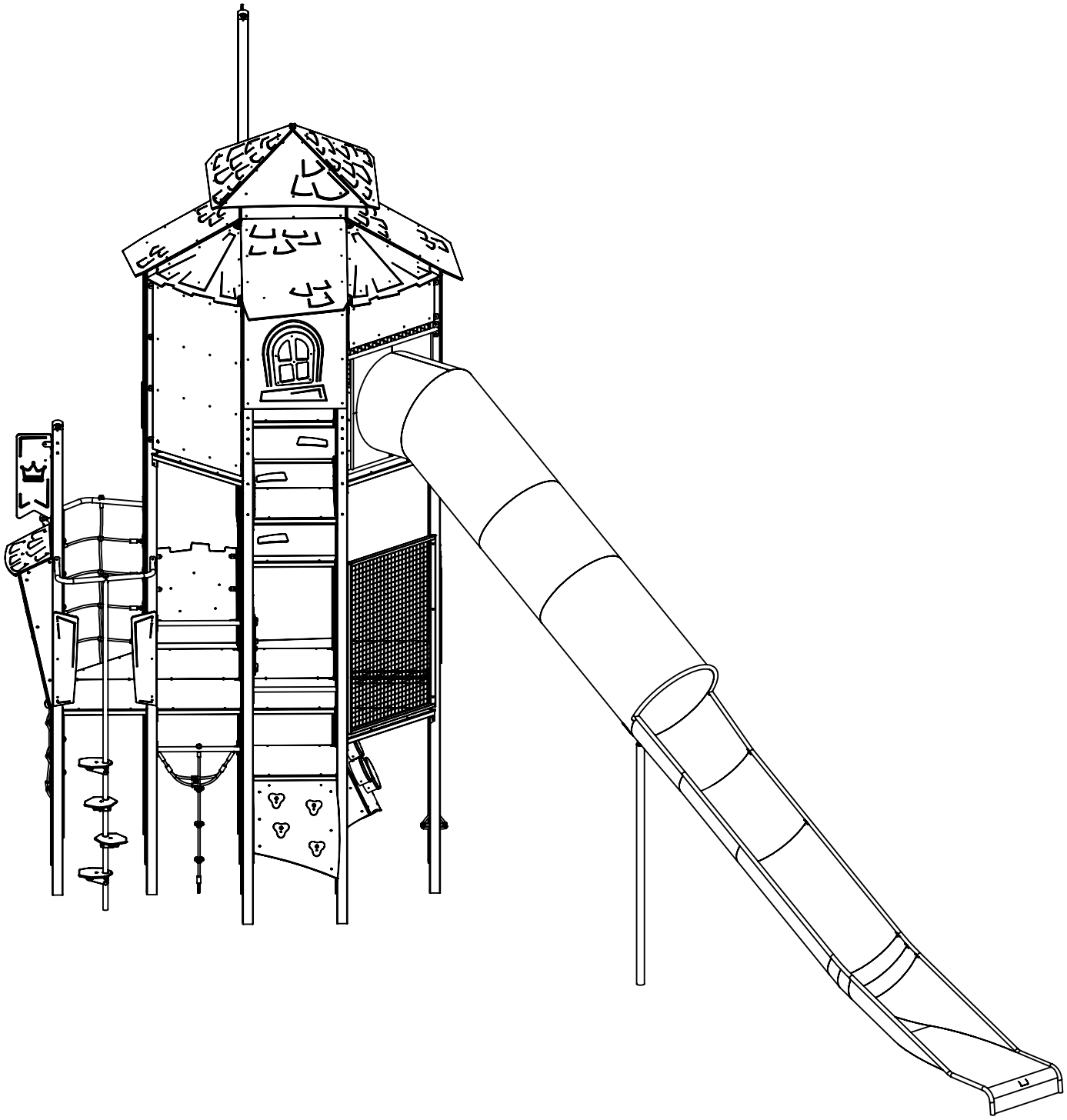

[cm]

vinci play

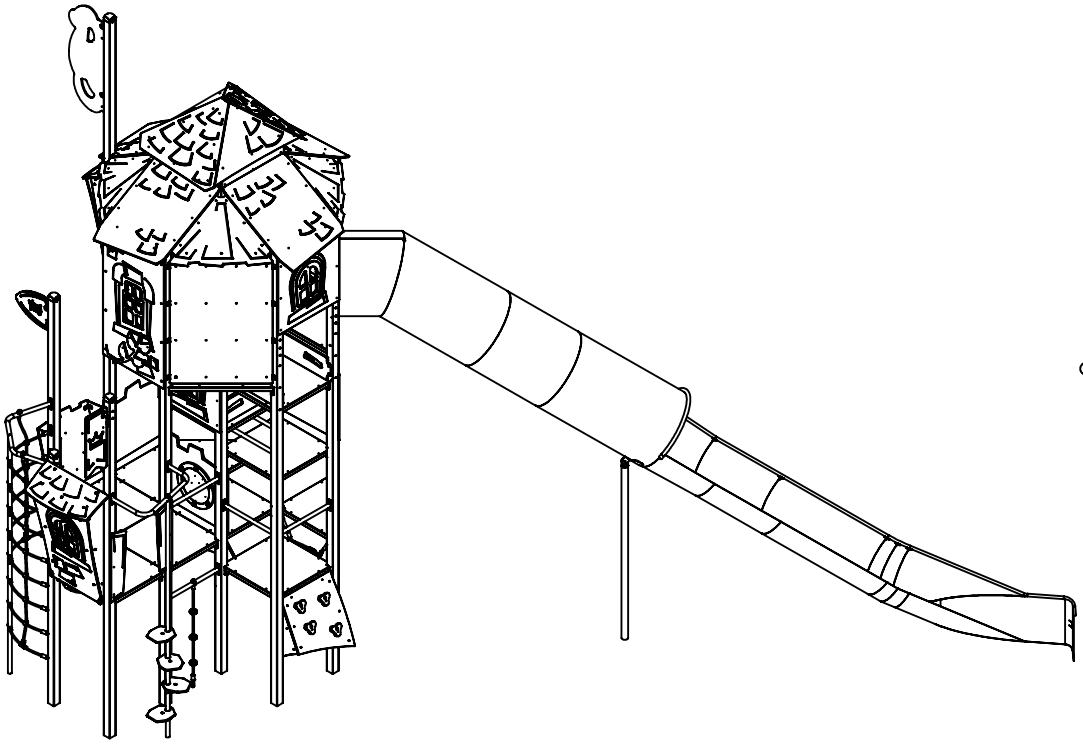

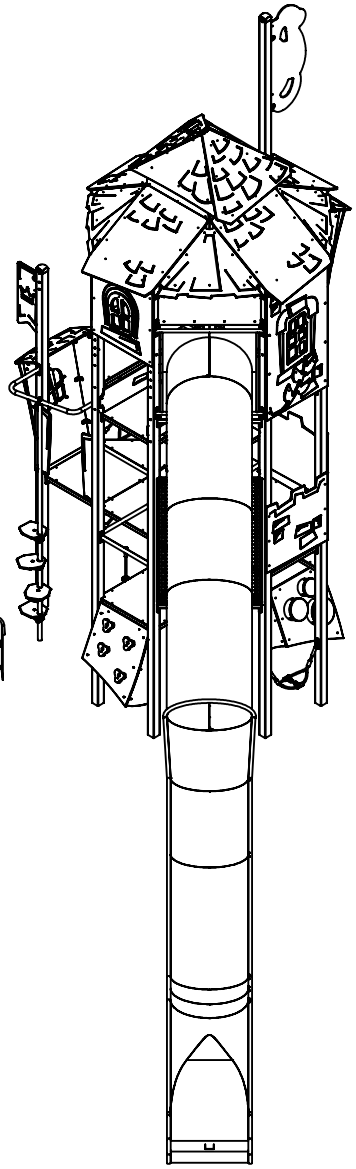

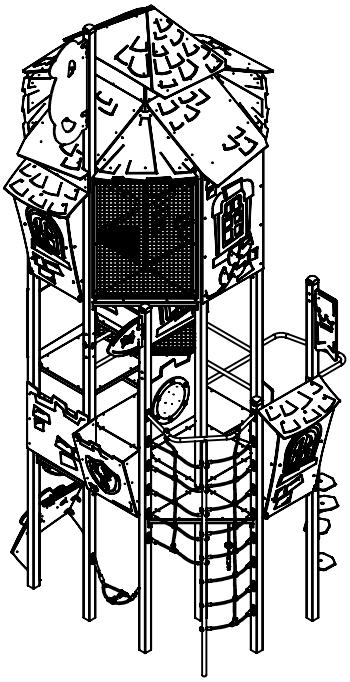

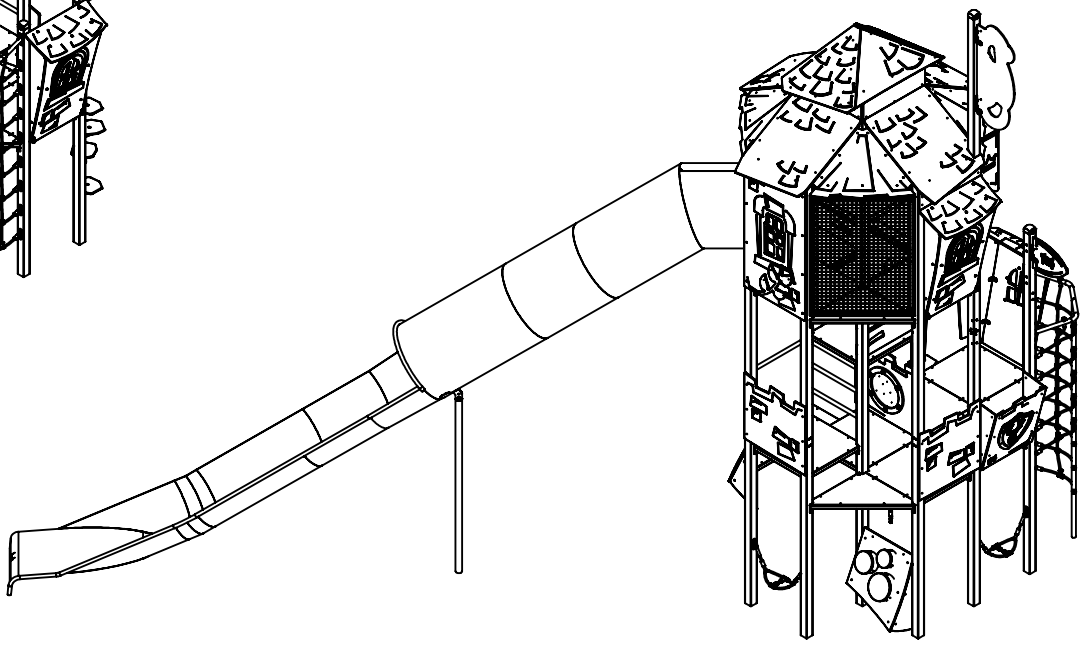

[cm]

vinci play

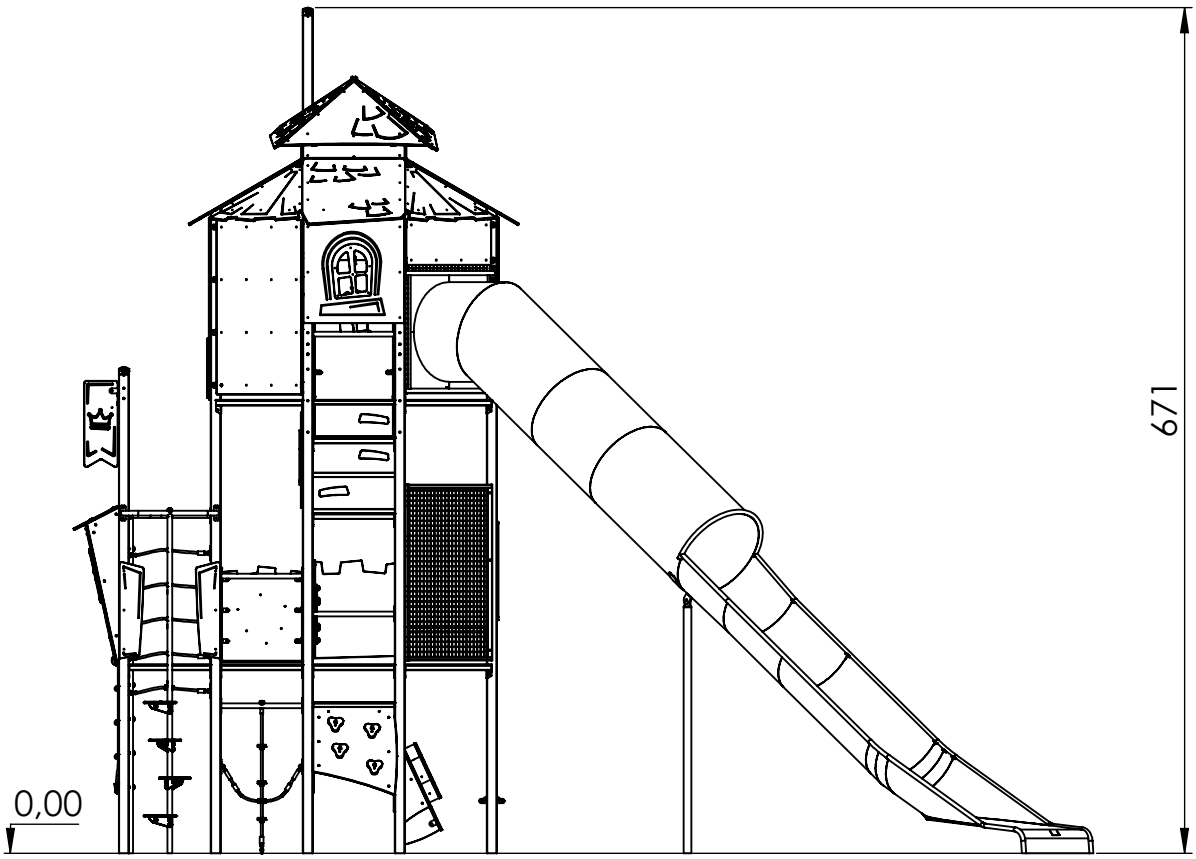

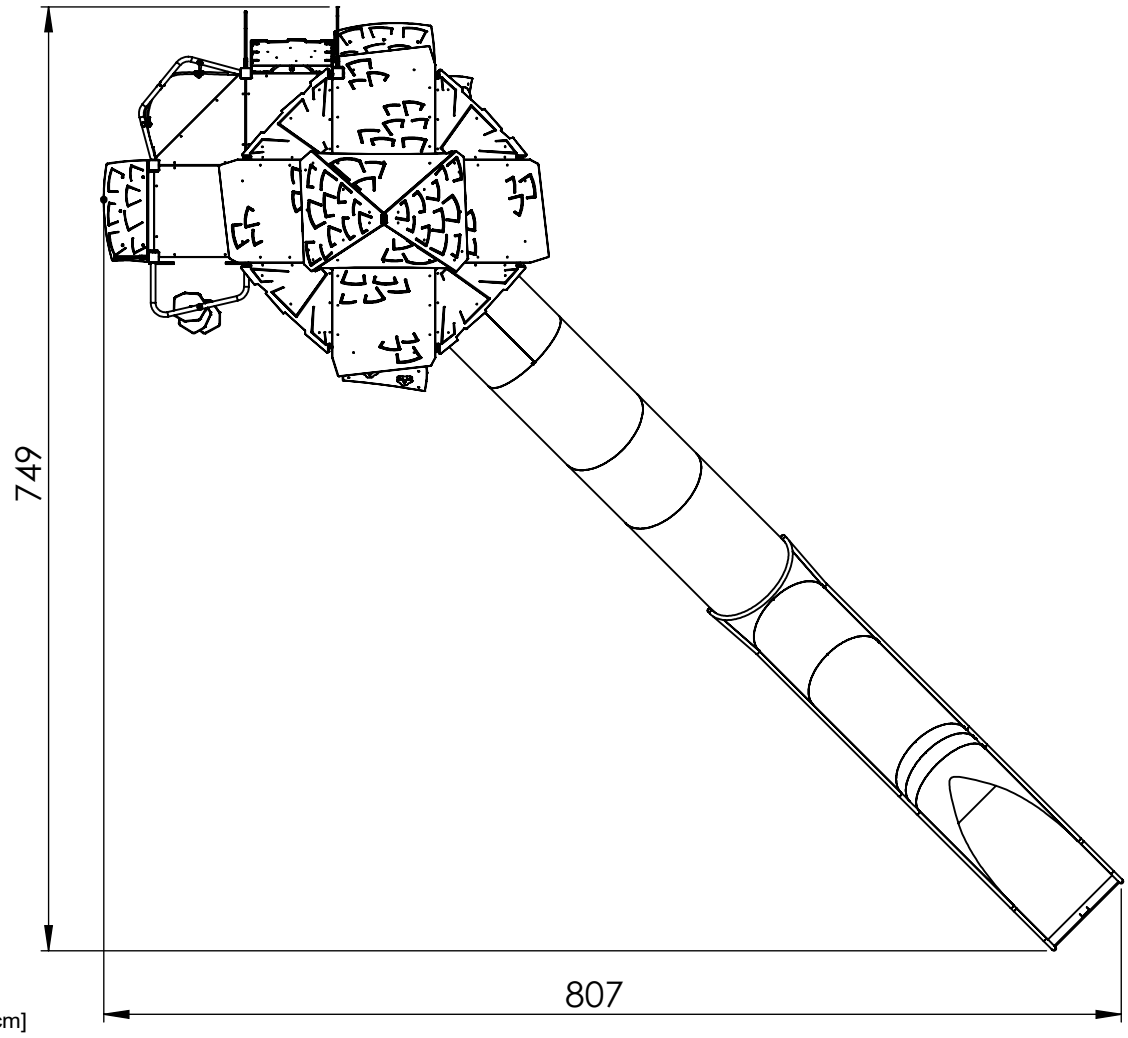

[cm]

vinci play

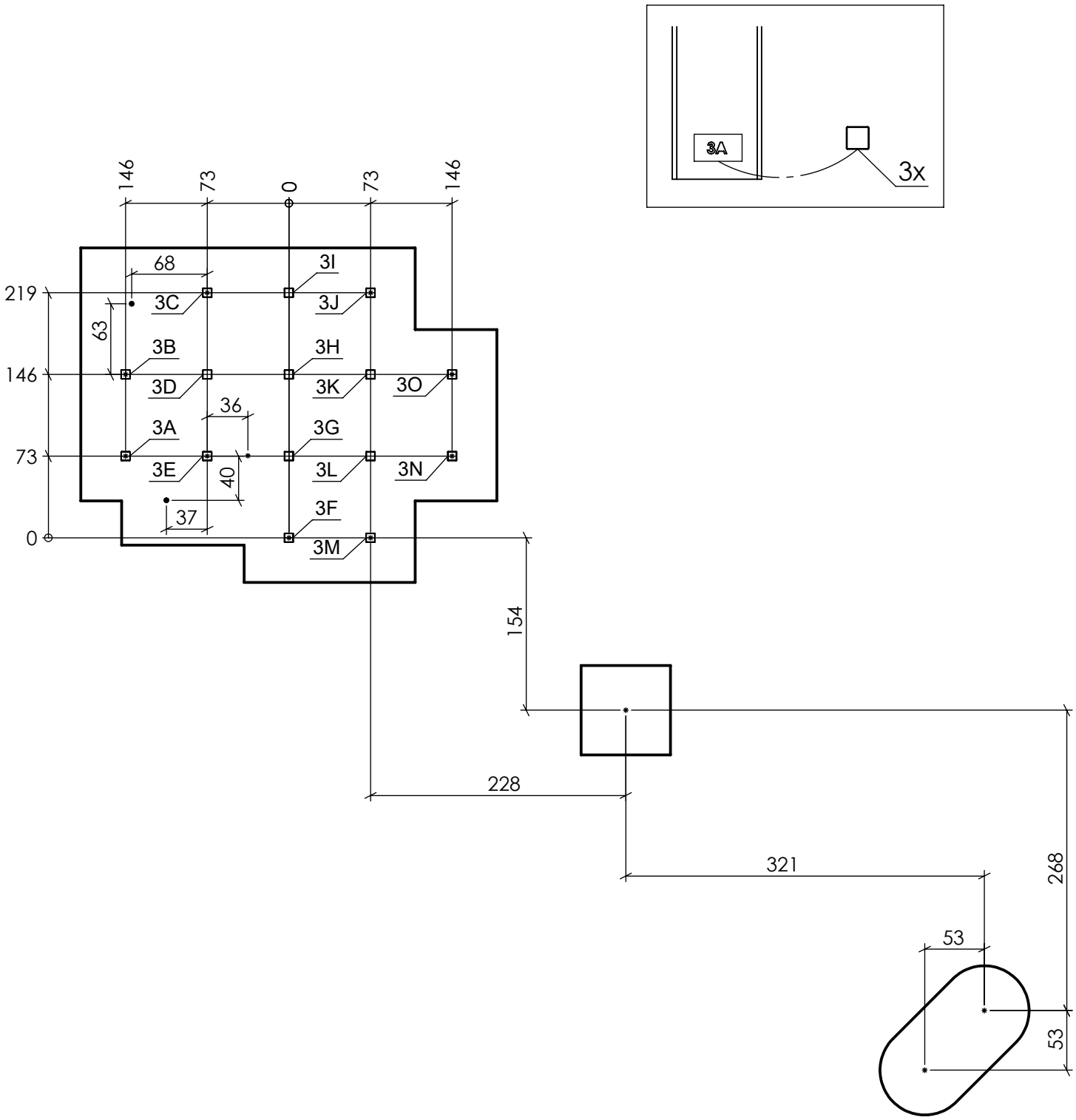
3A
3x
146
73
0
73
146
68
3I
219
3C
3J
63
3B
3H
146
3D
3K
3O
36
3A
3G
73
3E
3L
3N
40
37
3F
0
3M
154
228
321
268
53
53

[cm]

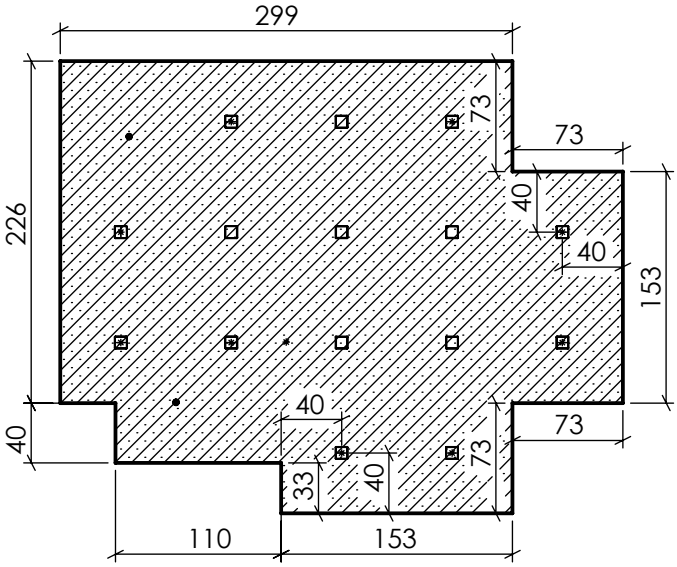
299
73
73
226
40
40
153
40
73
40
73
33
40
110
153

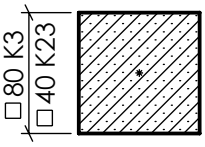
□80 K3
□40 K23

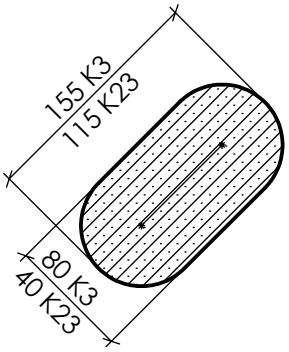
155 K3
115 K23
80 K3
40 K23

[cm]

3060-1.03S2

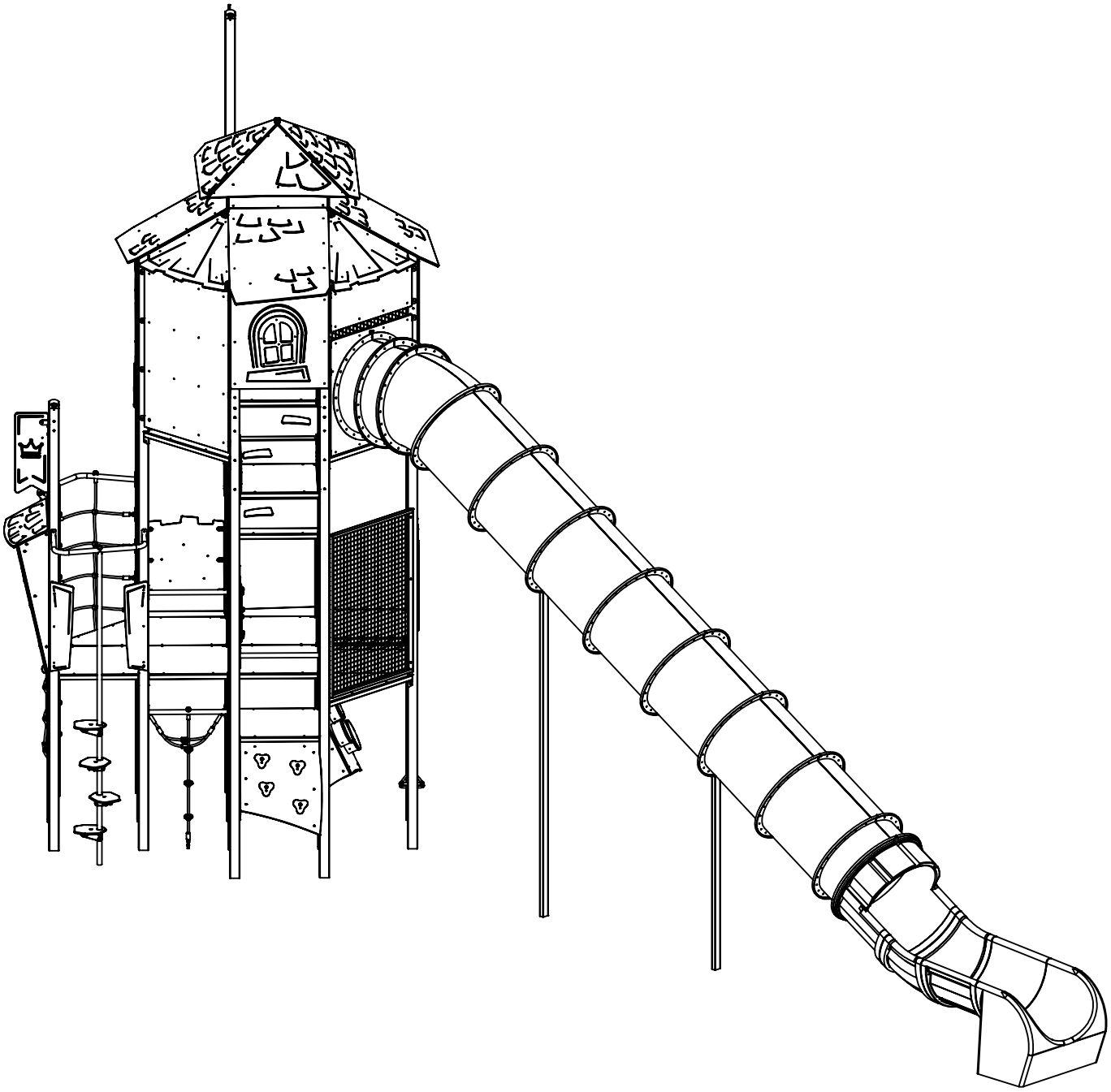

[cm]

vinci play

3060-1.03S2

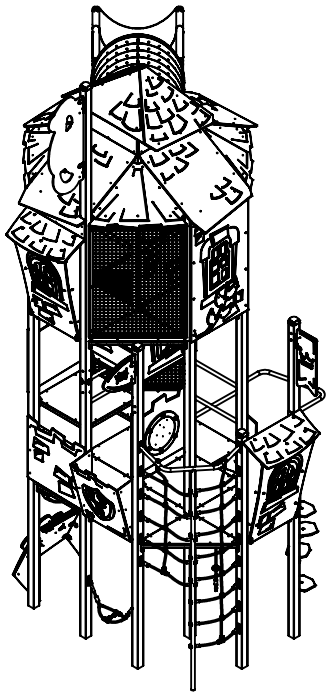

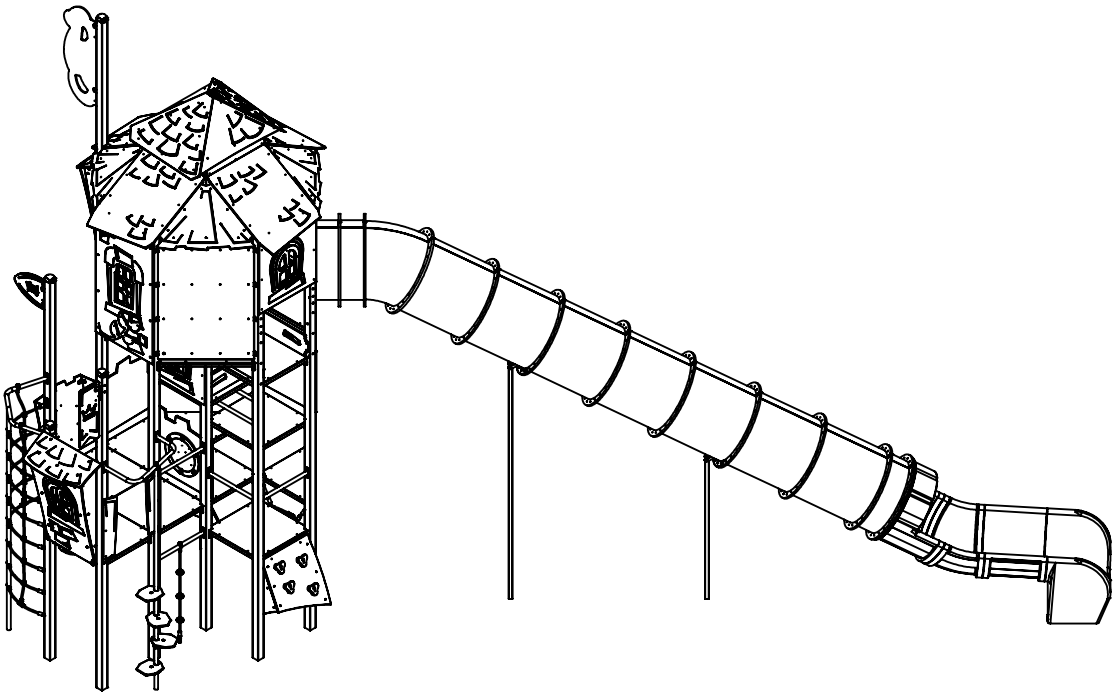

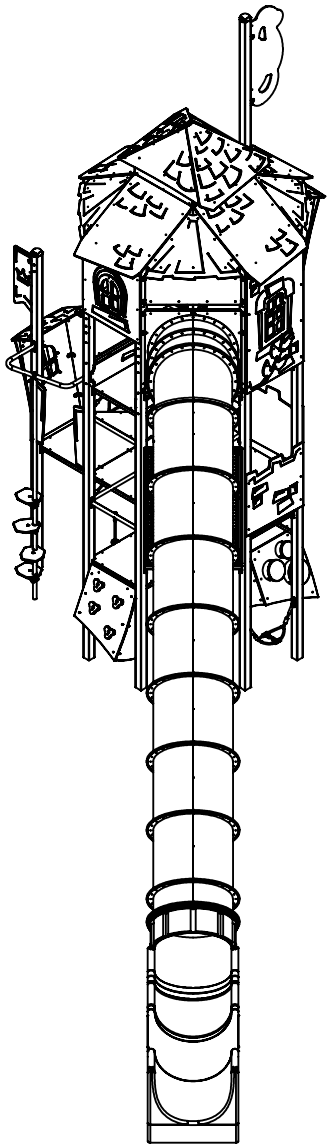

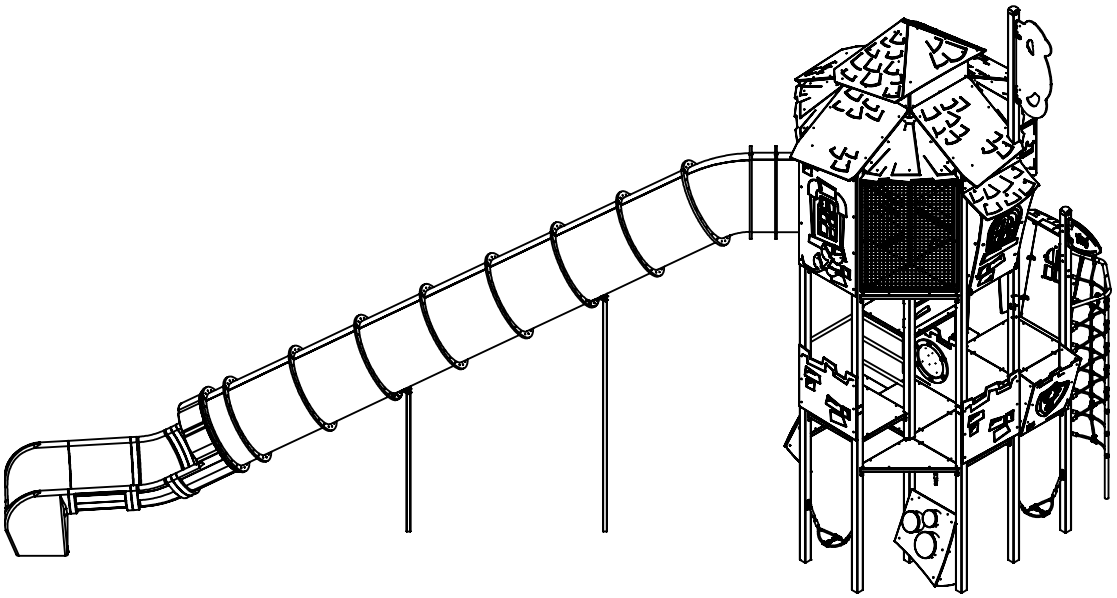

[cm]

3060-1.03S2

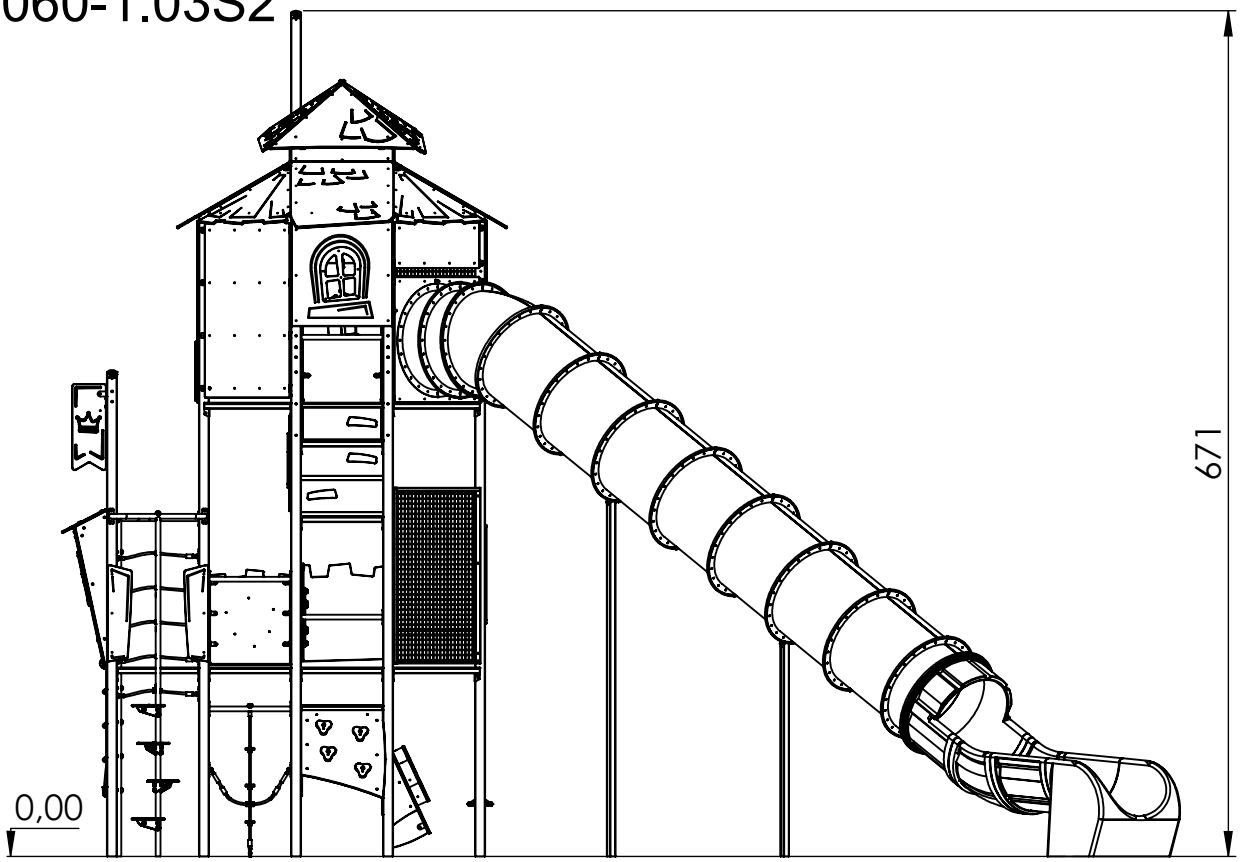

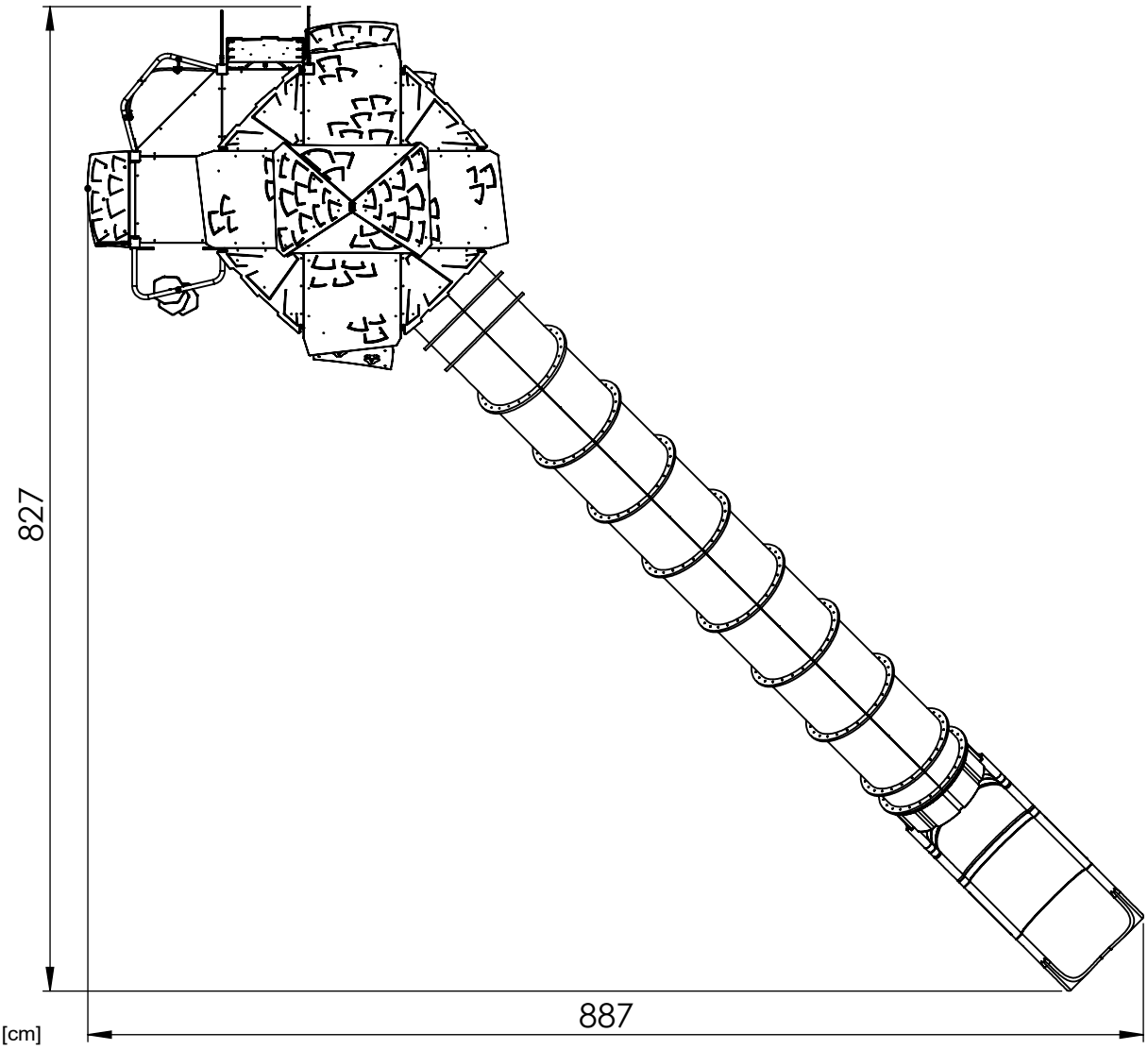

[cm]

vinci play

3060-1.03S2

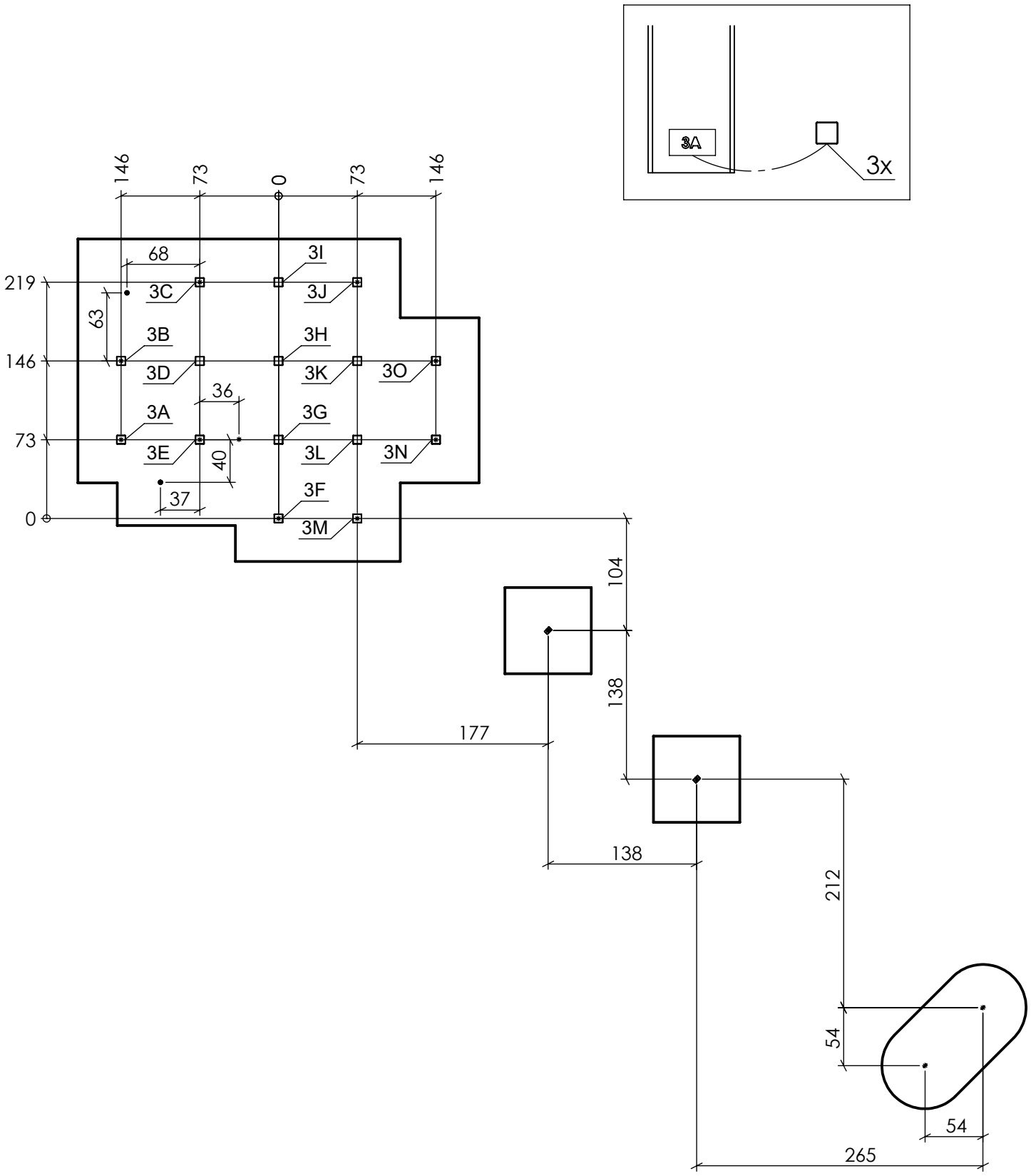

[cm]

3060-1.03S2

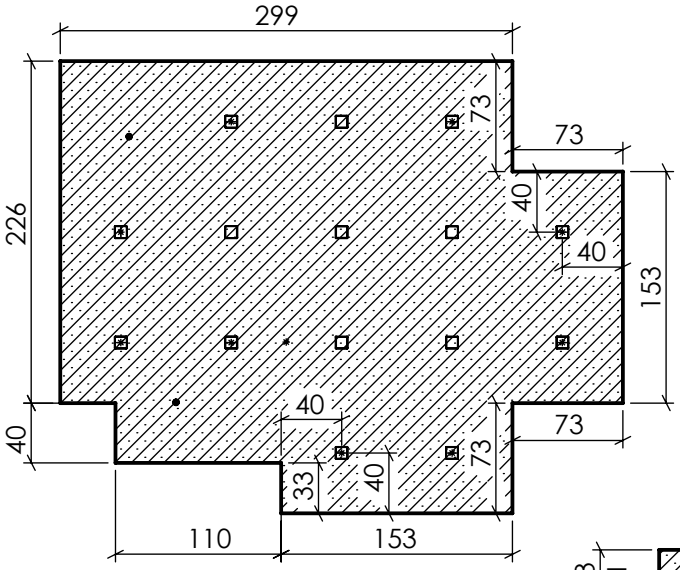

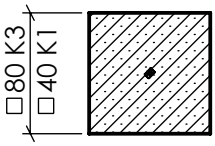

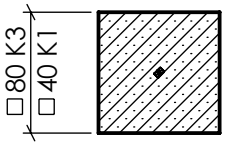

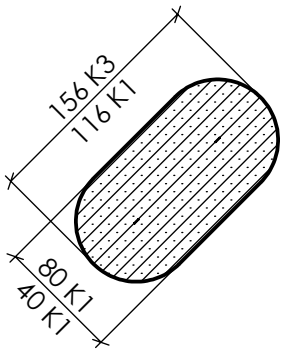

[cm]

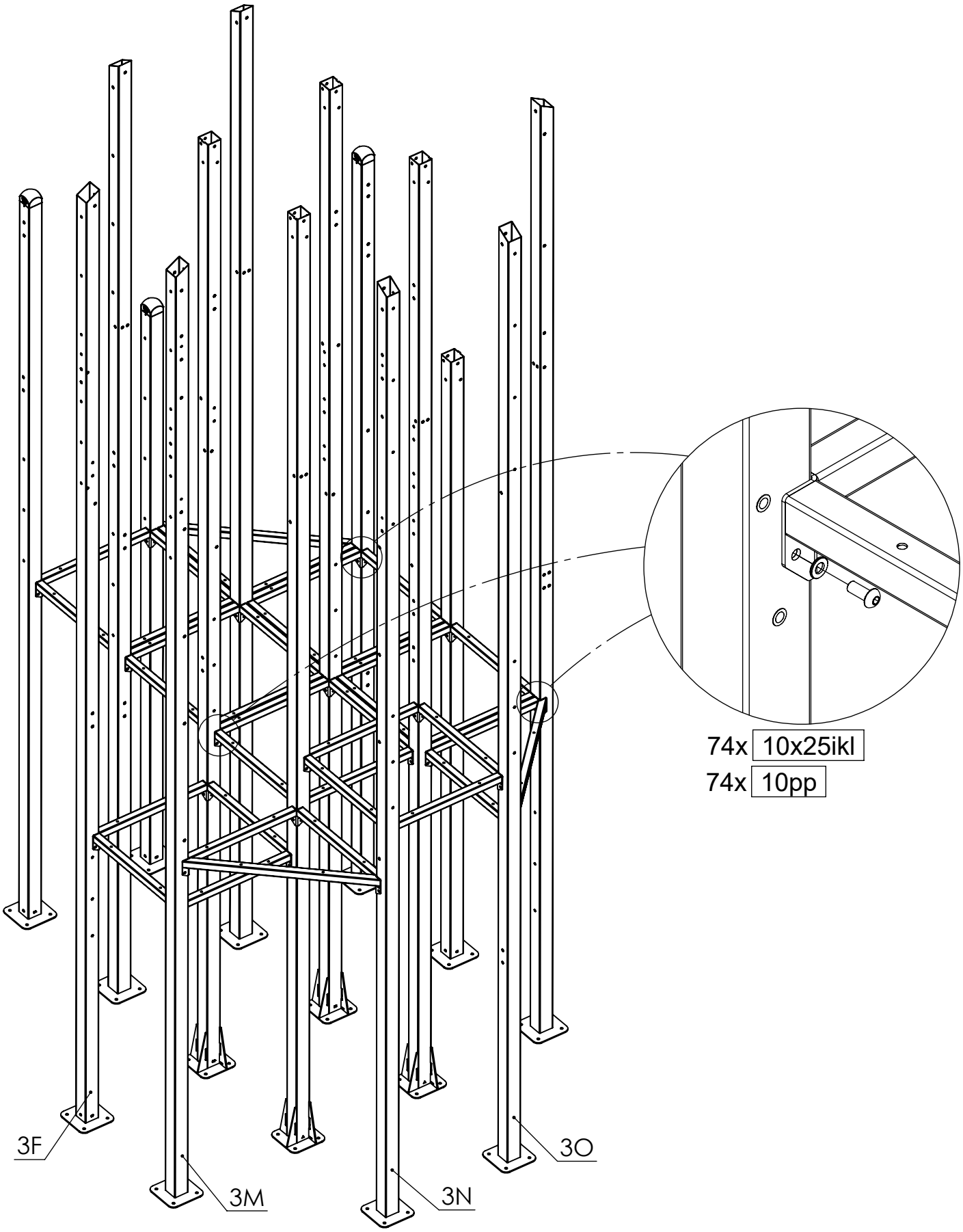

[cm]

vinci play

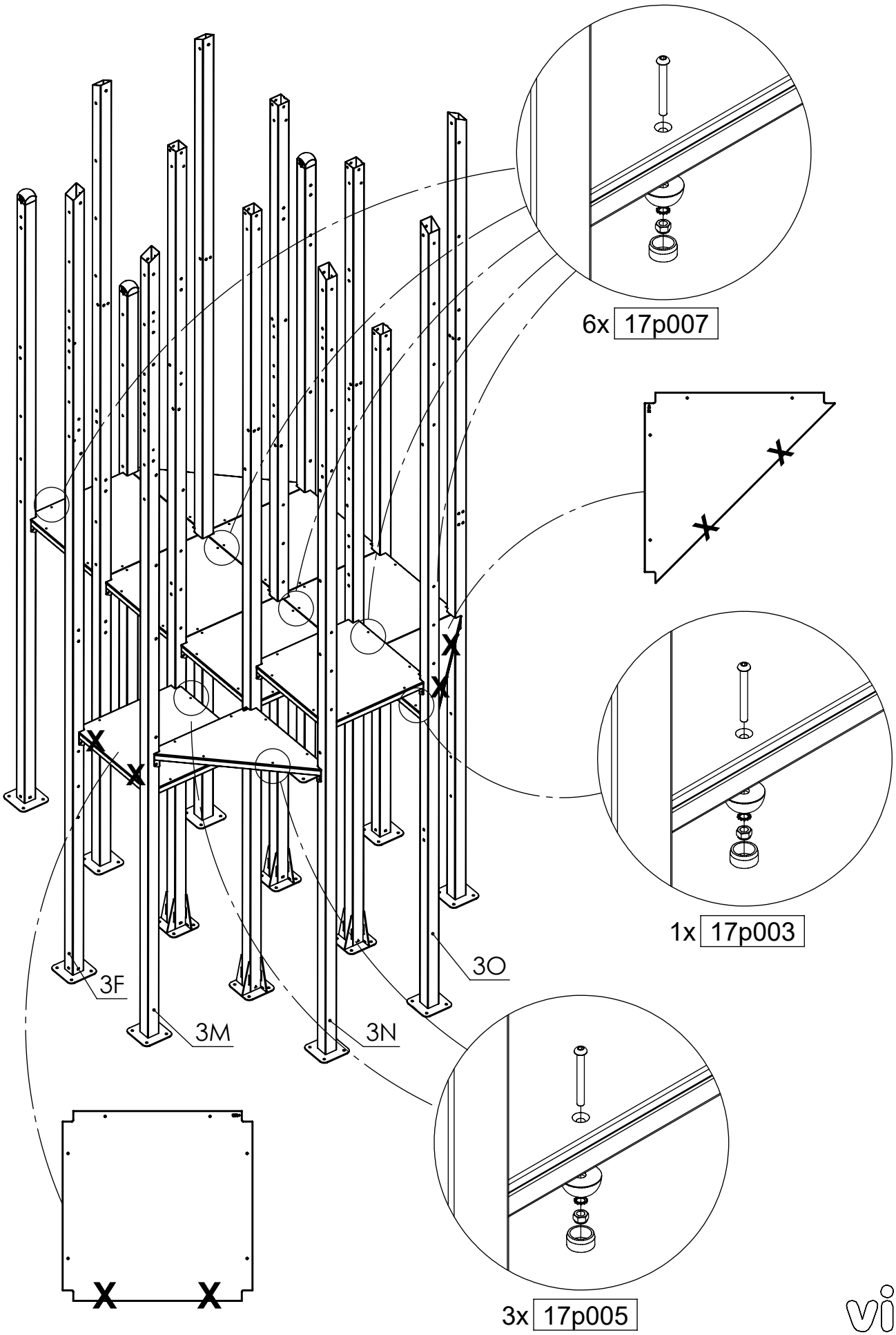
6x 17p007
1x 17p003
3x 17p005
3F
3M
3N
3O
[cm]

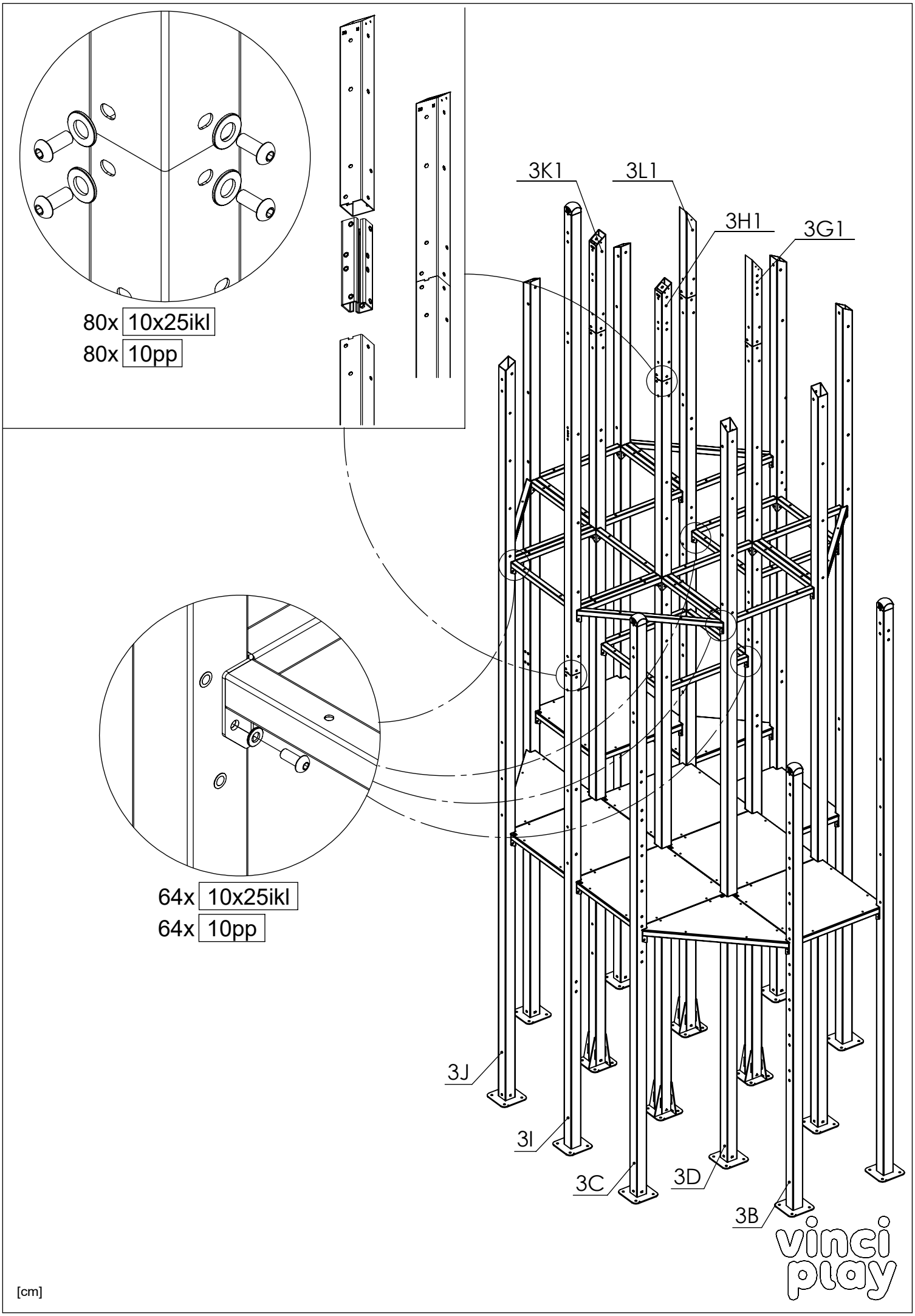
80x 10x25ikl
80x 10pp
64x 10x25ikl
64x 10pp
3K1
3L1
3H1
3G1
3J
3I
3C
3D
3B
[cm]
vinci play

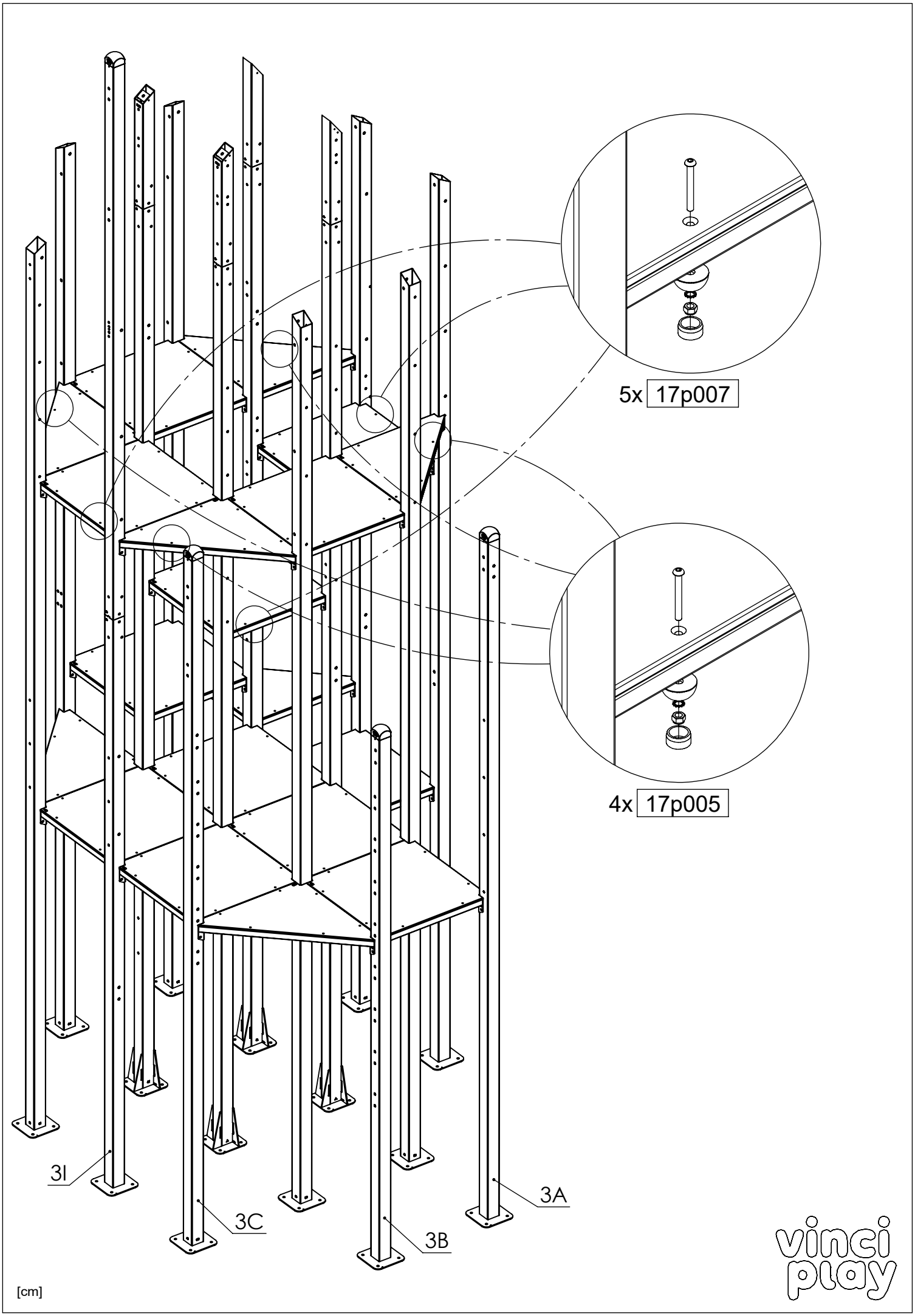
5x 17p007
4x 17p005
3I
3C
3B
3A
[cm]
vinci play

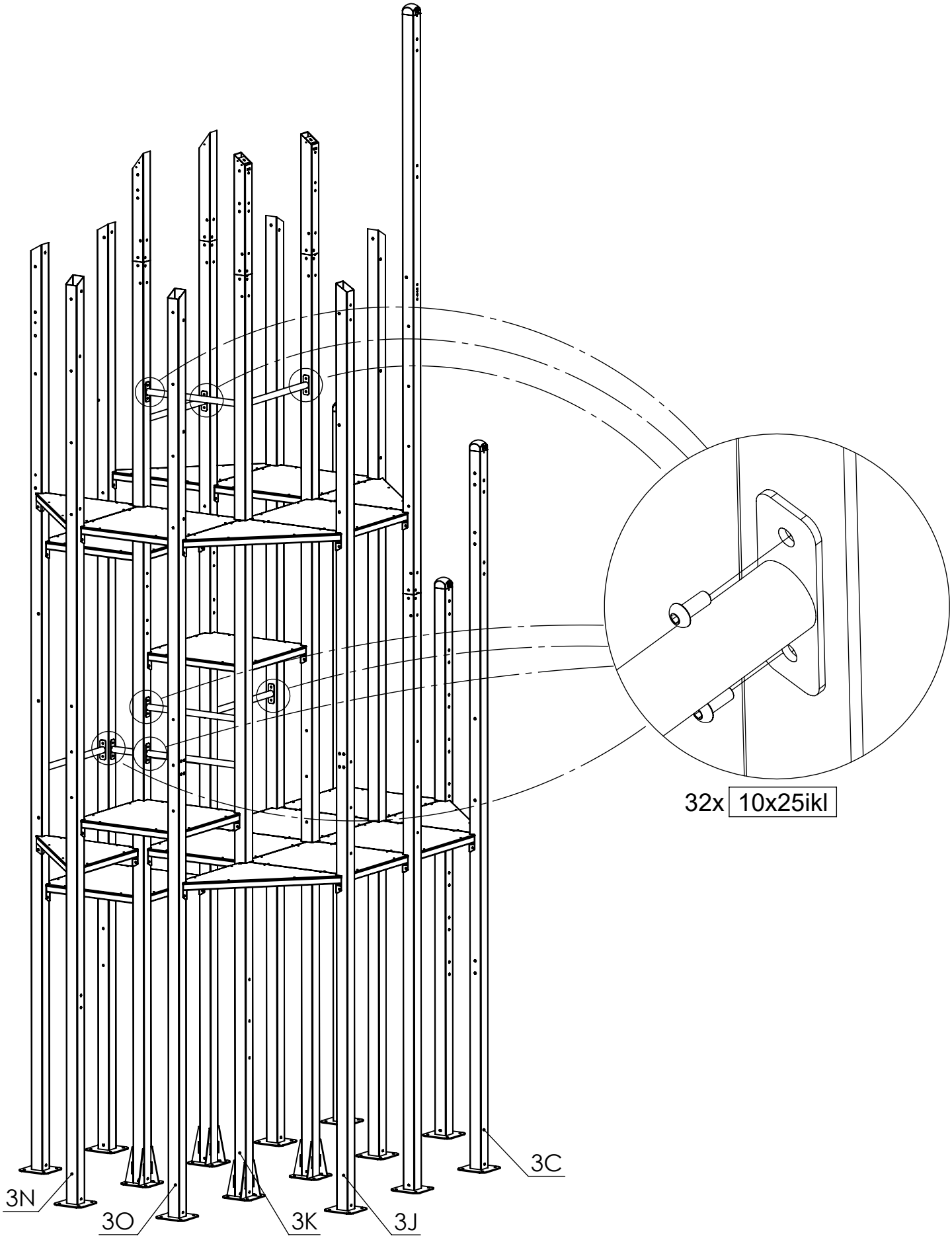

[cm]

vinci play

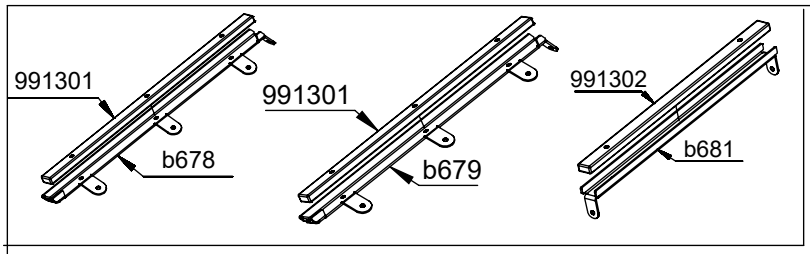

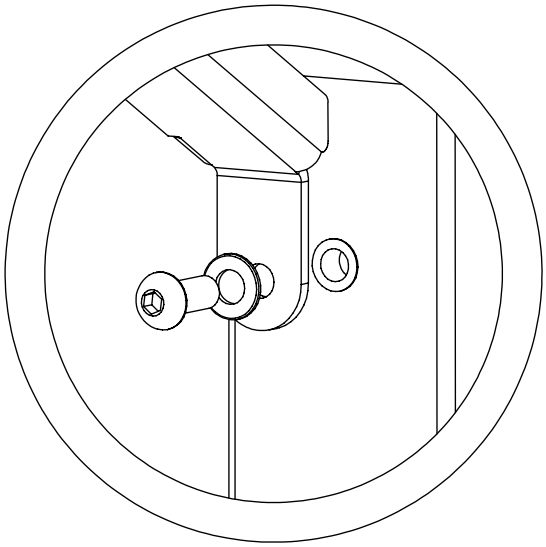

16x 10x25ikl
16x 10pp

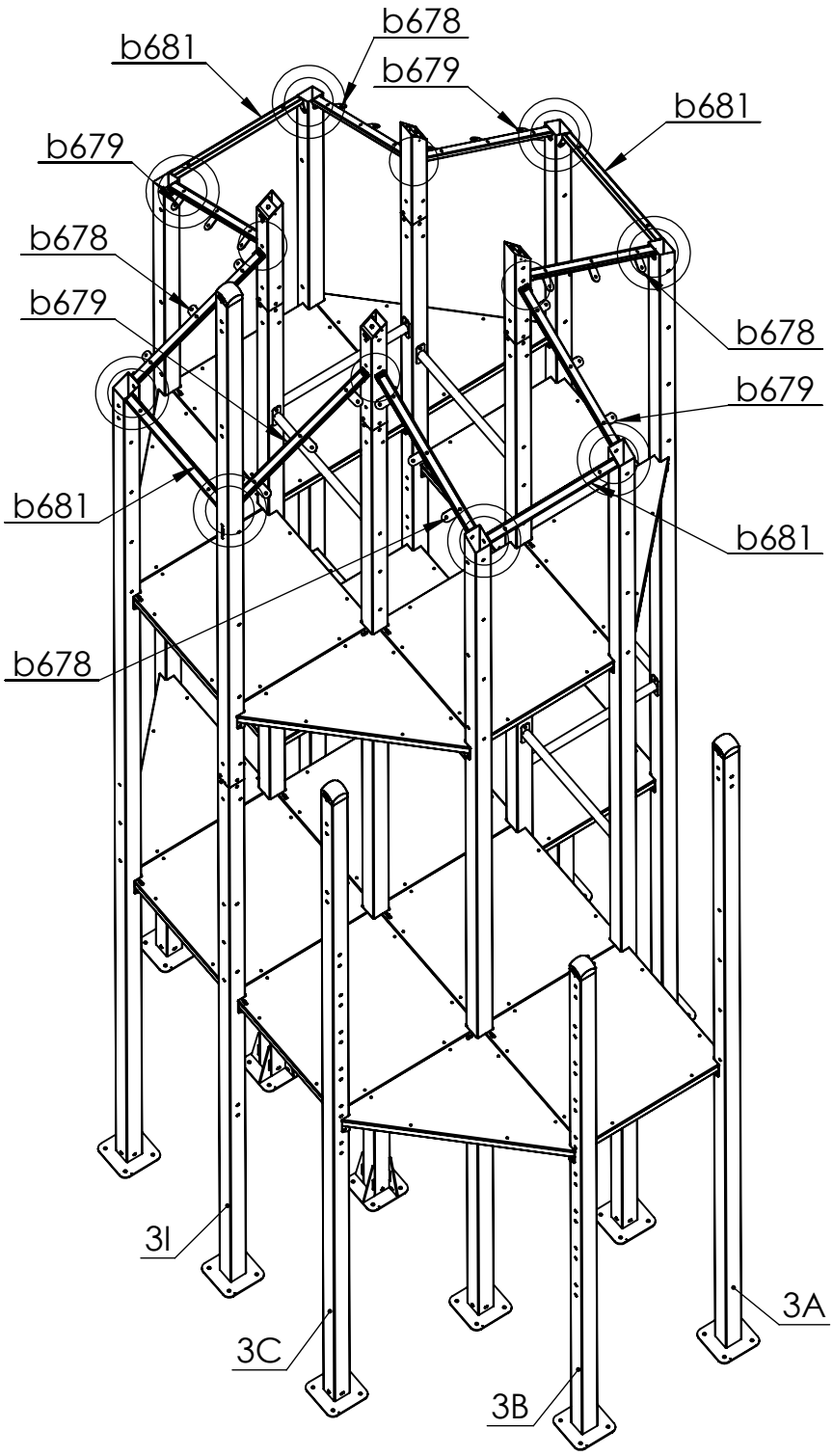

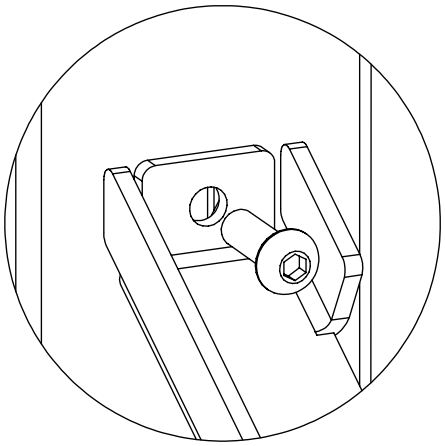

8x 8x25ikl

[cm]

vinci play

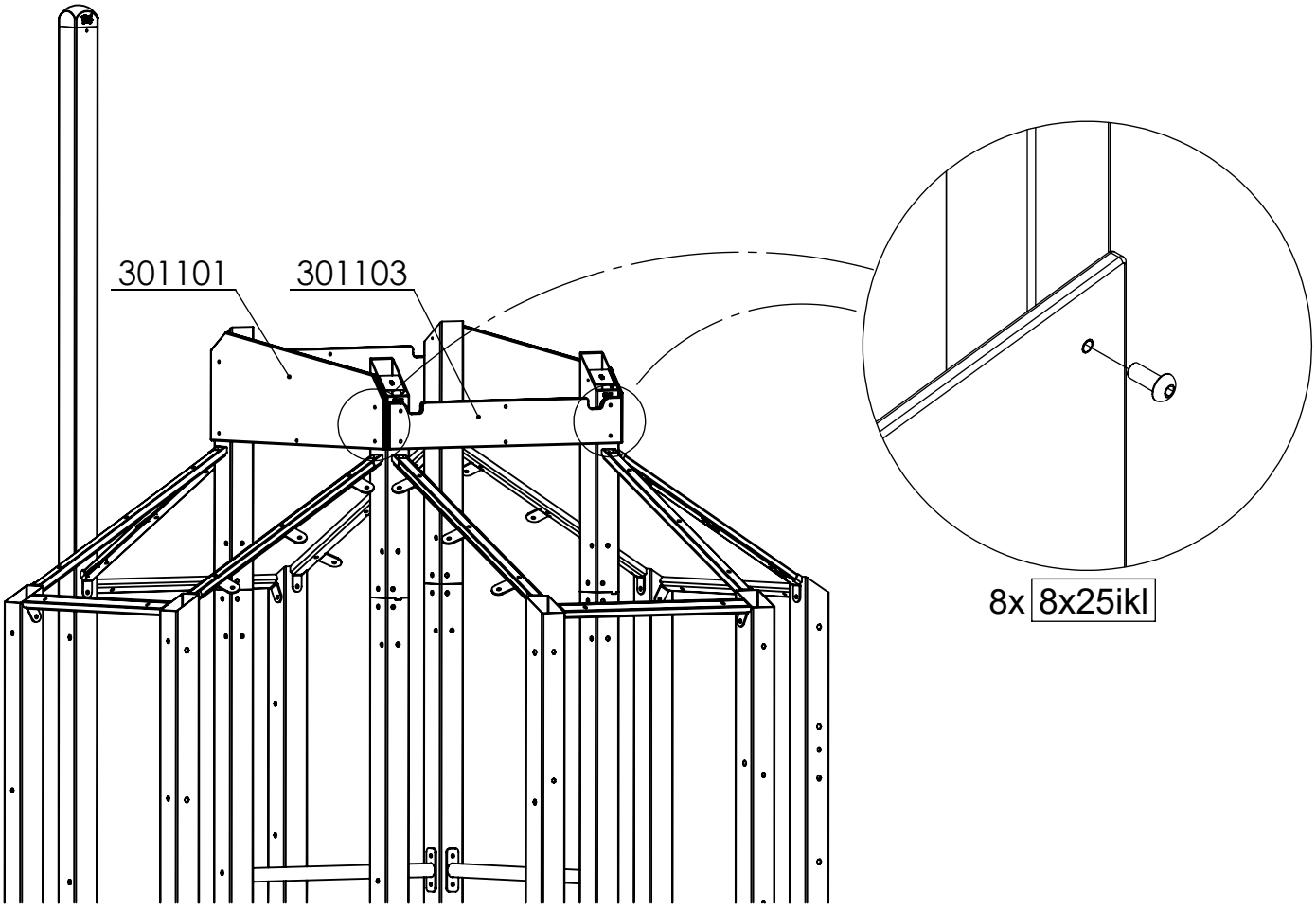

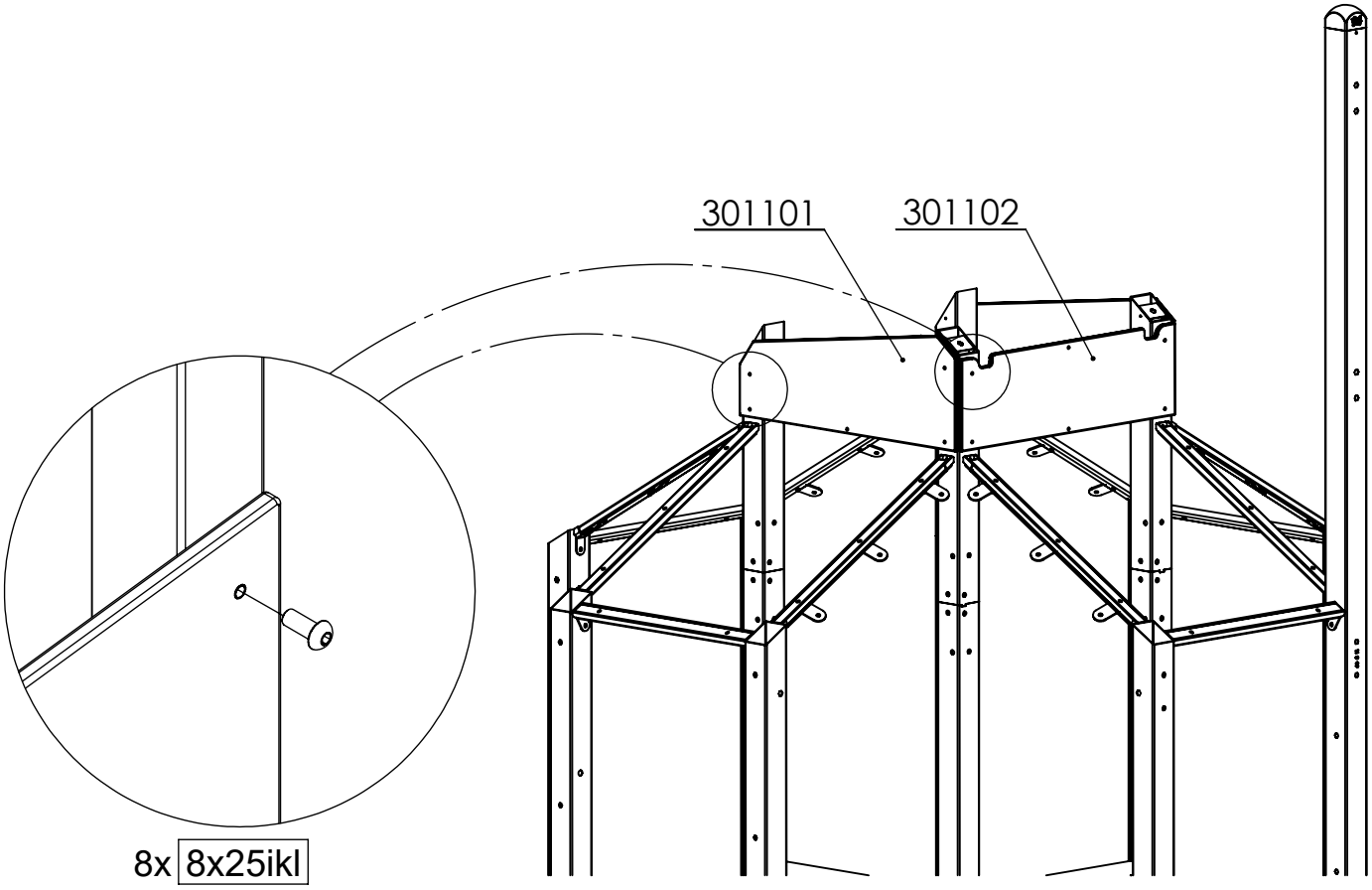

[cm]

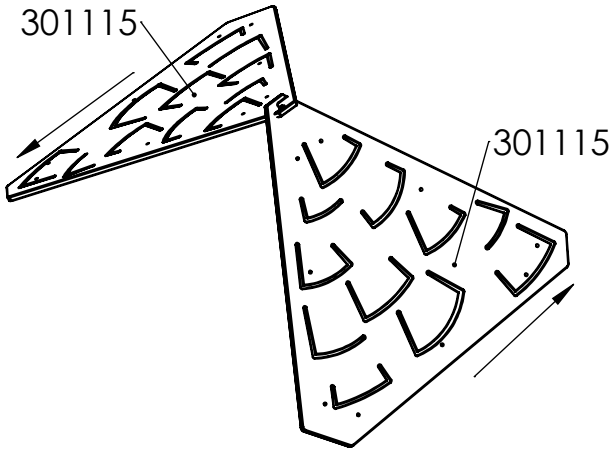

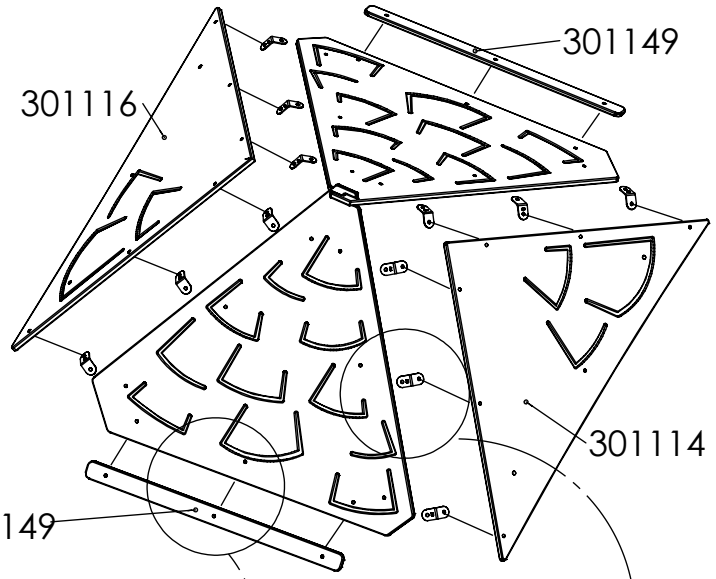

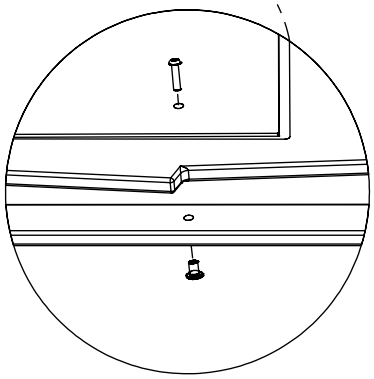

2x 30c152

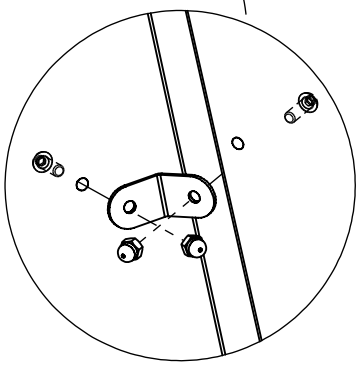

1x 30c058

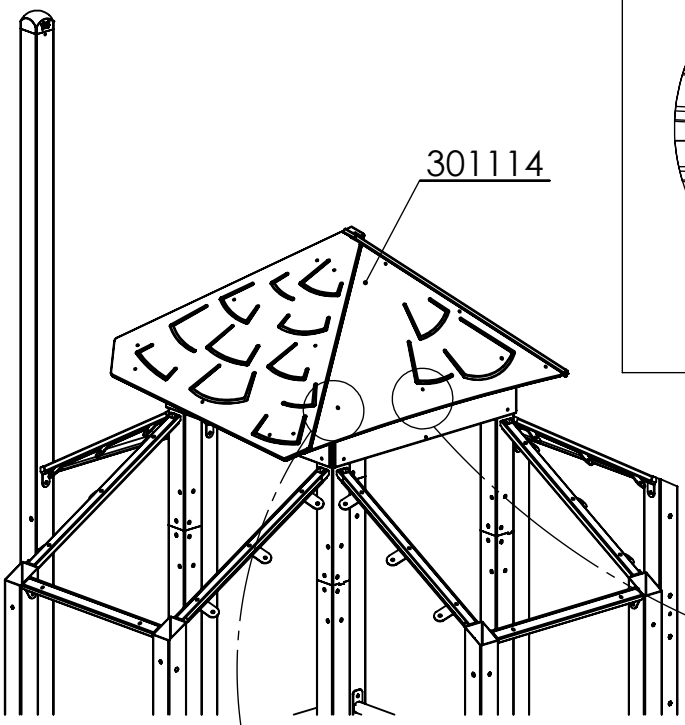

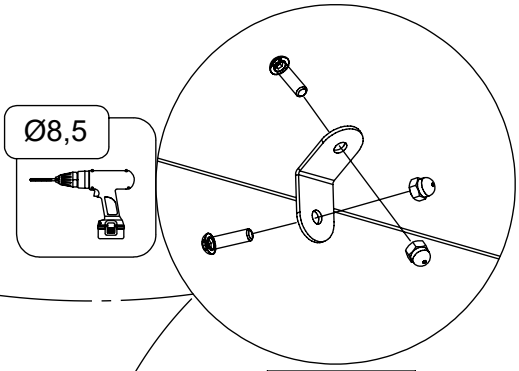

1x 30c154

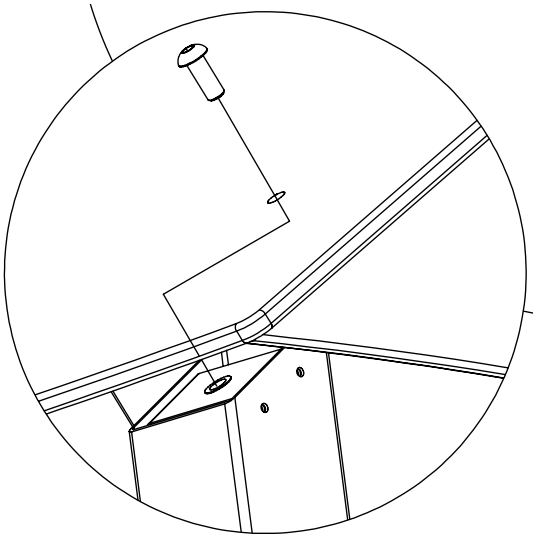

4x 10x30ikl

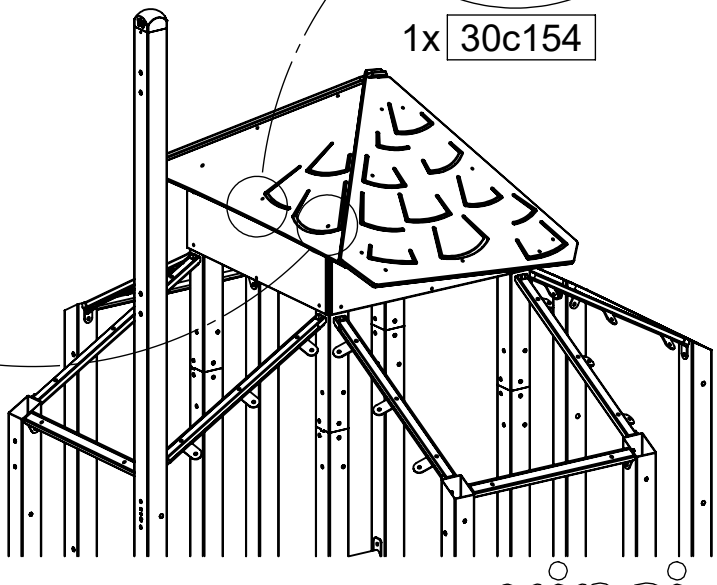

vinci play

[cm]

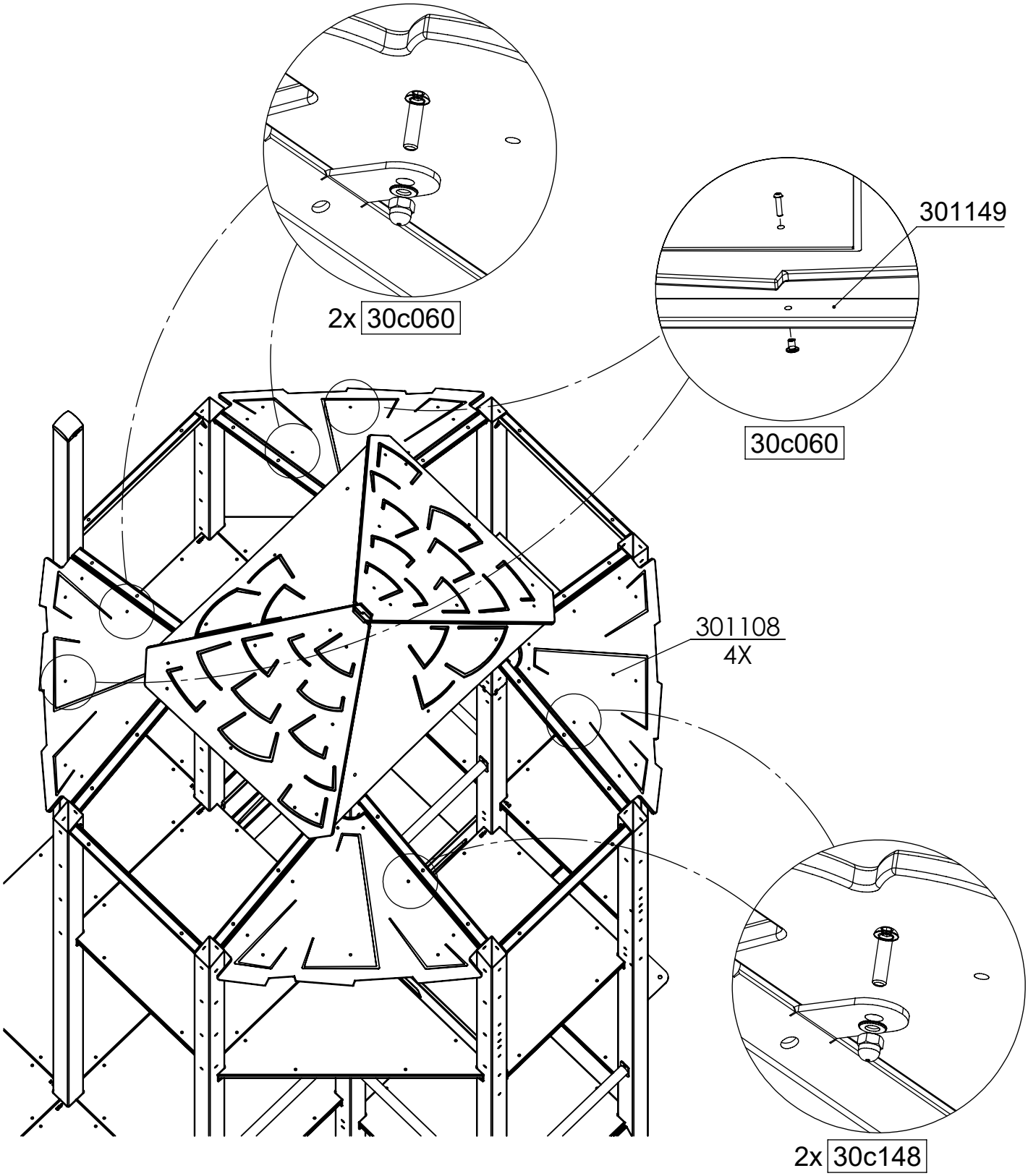

[cm]

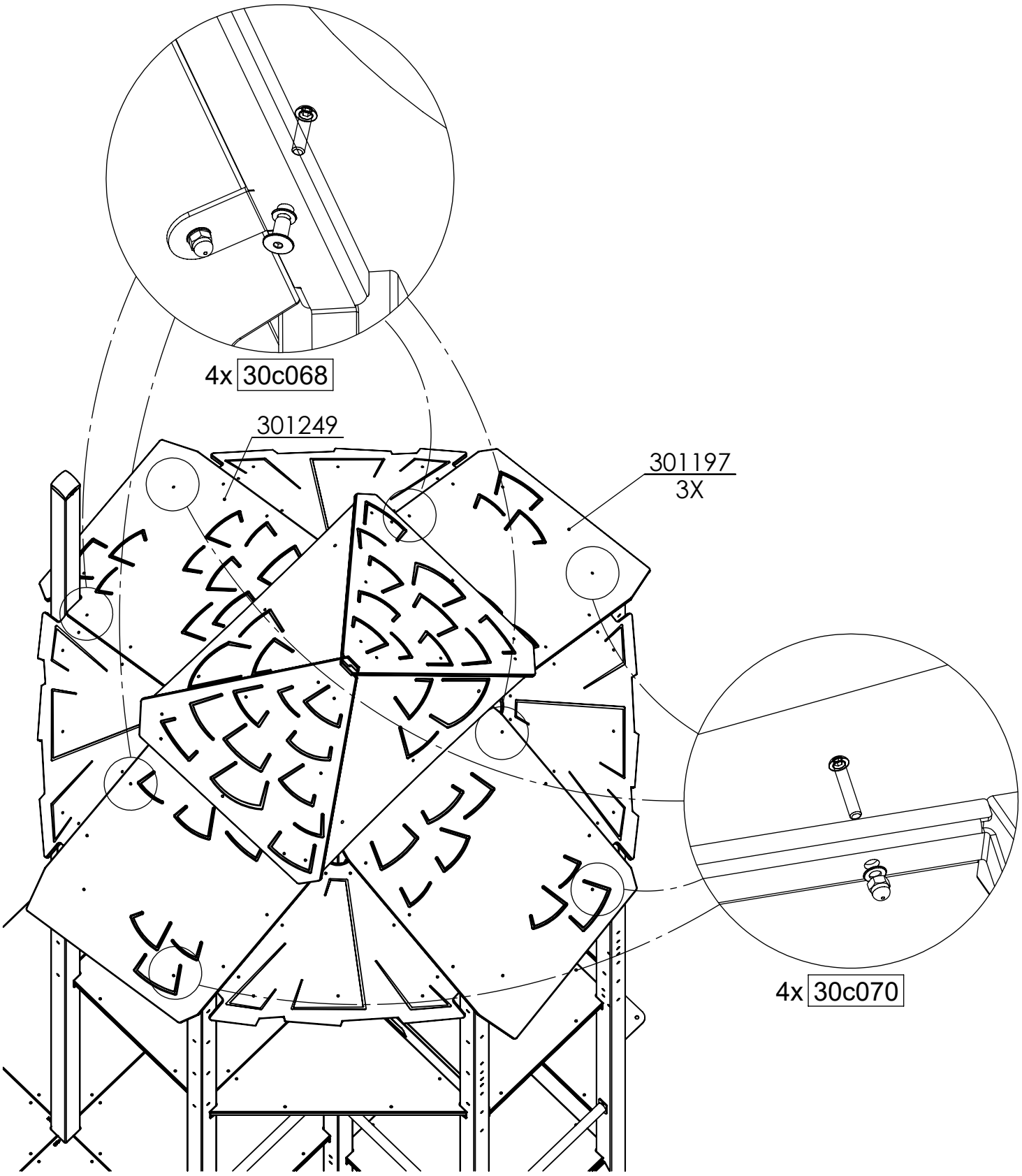

[cm]

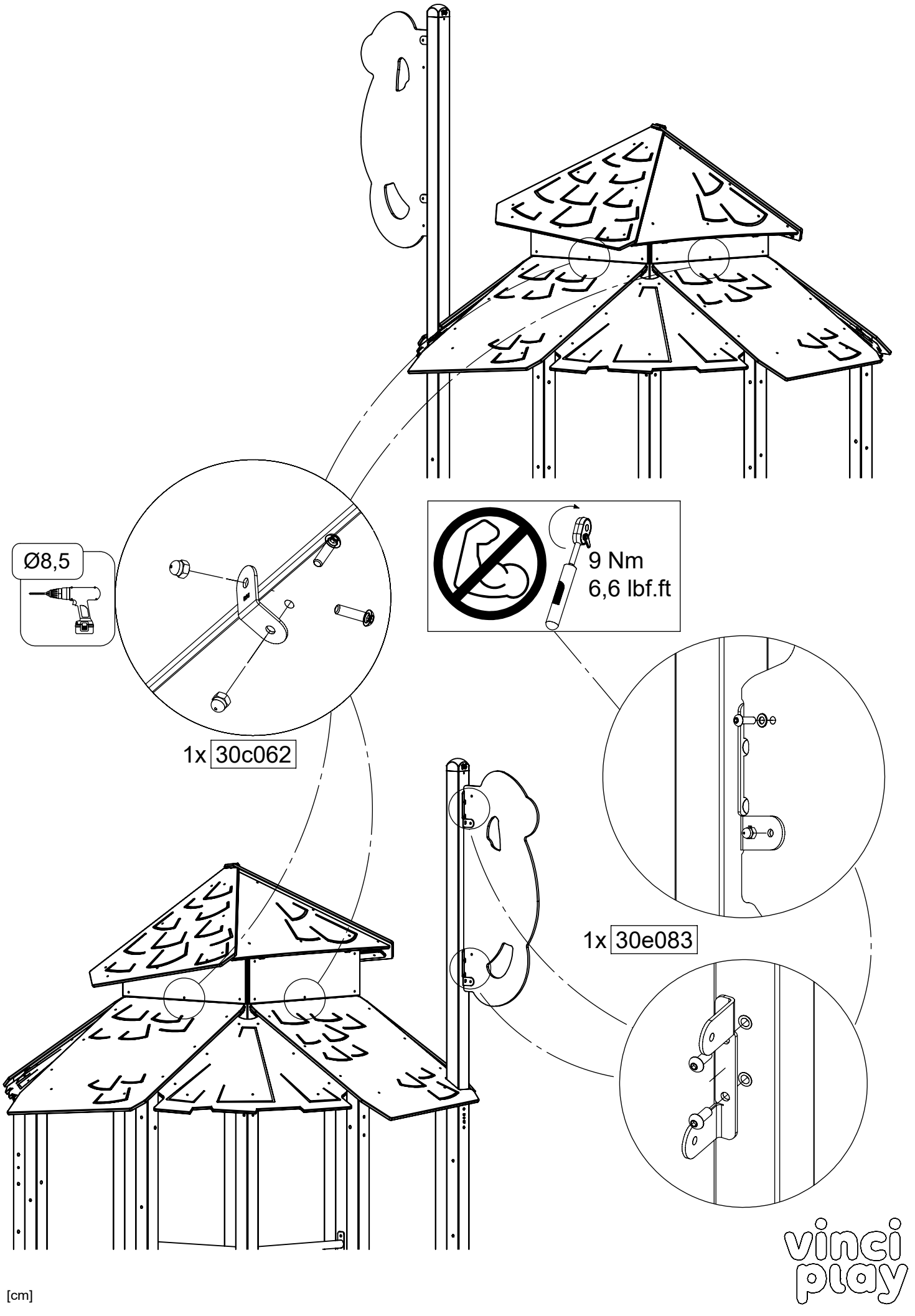
Ø8,5
9 Nm
6,6 lbf.ft
1x 30c062
1x 30e083
[cm]
vinci play

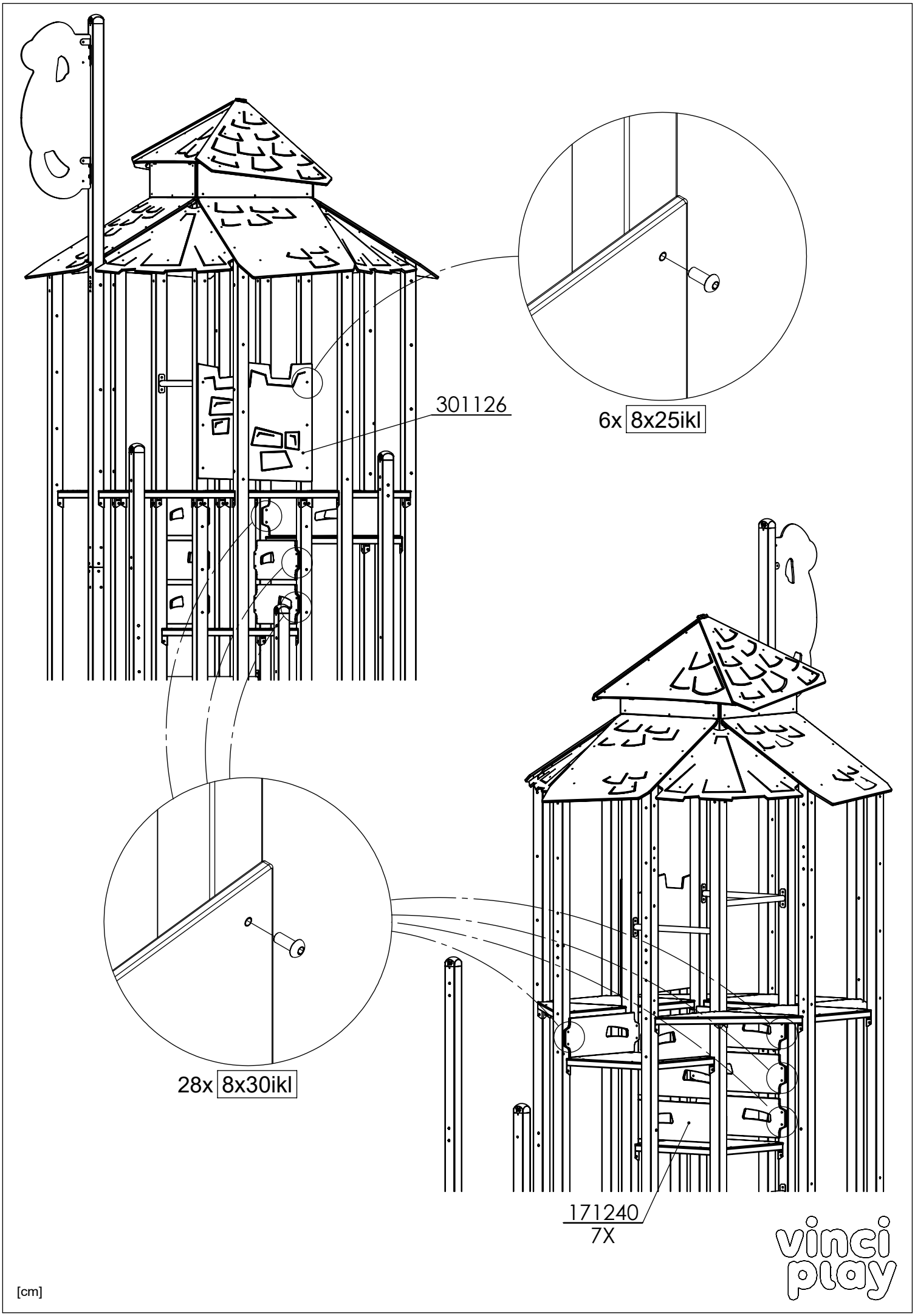
301126
6x 8x25ikl
28x 8x30ikl
171240
7X
vinci play
[cm]

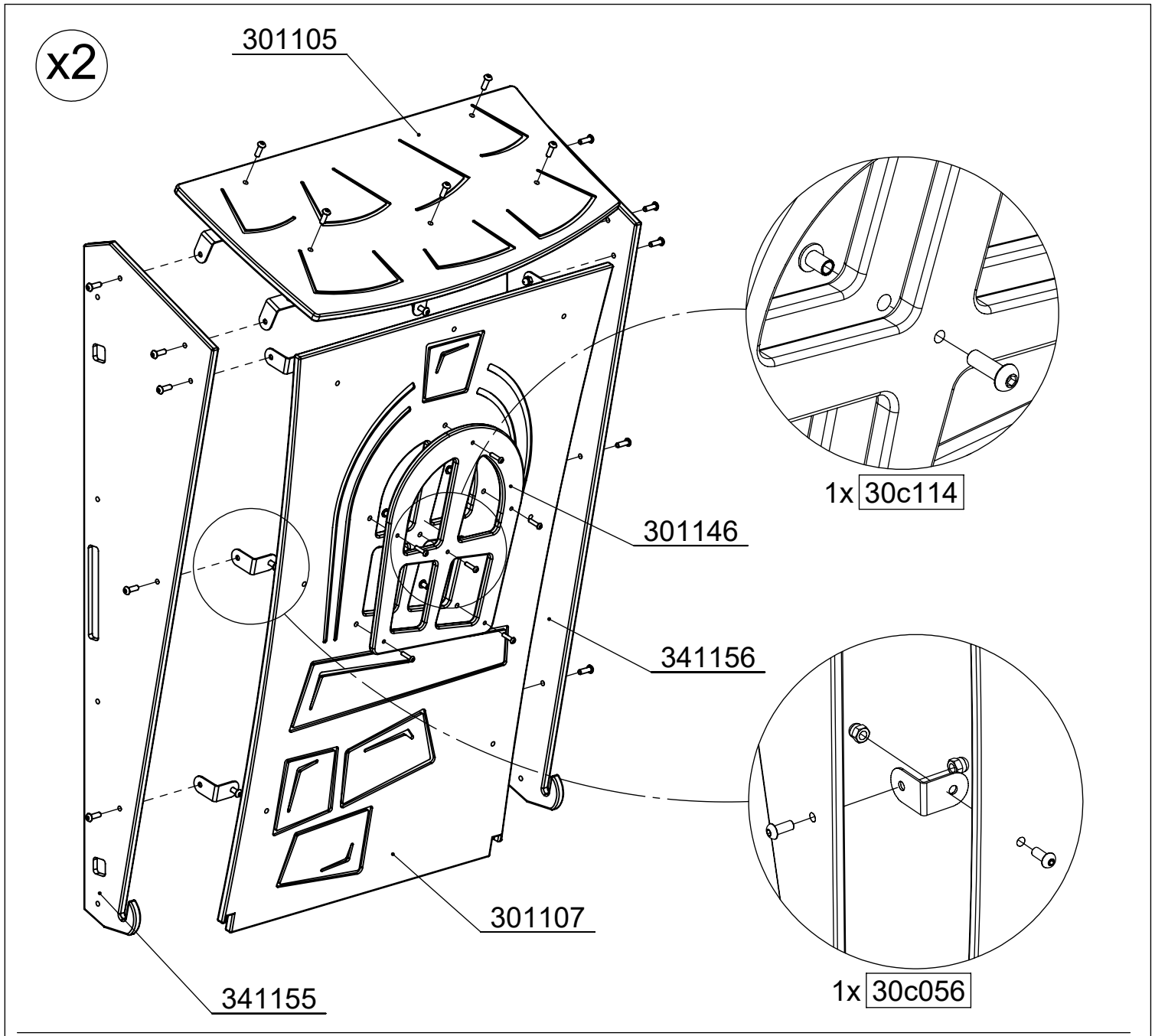
x2
301105
301146
341156
301107
341155
1x 30c114
1x 30c056

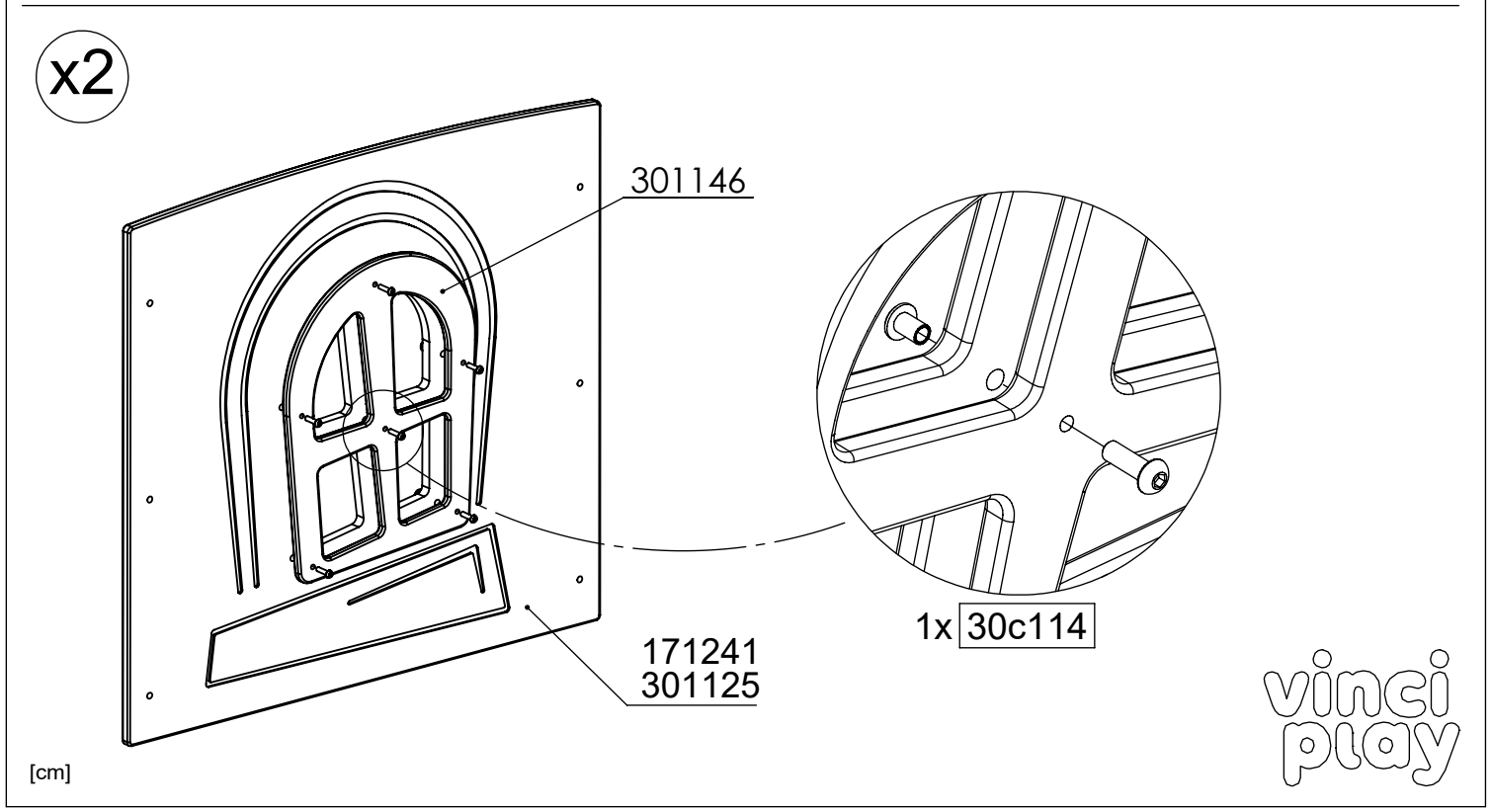
x2
301146
171241
301125
1x 30c114
[cm]

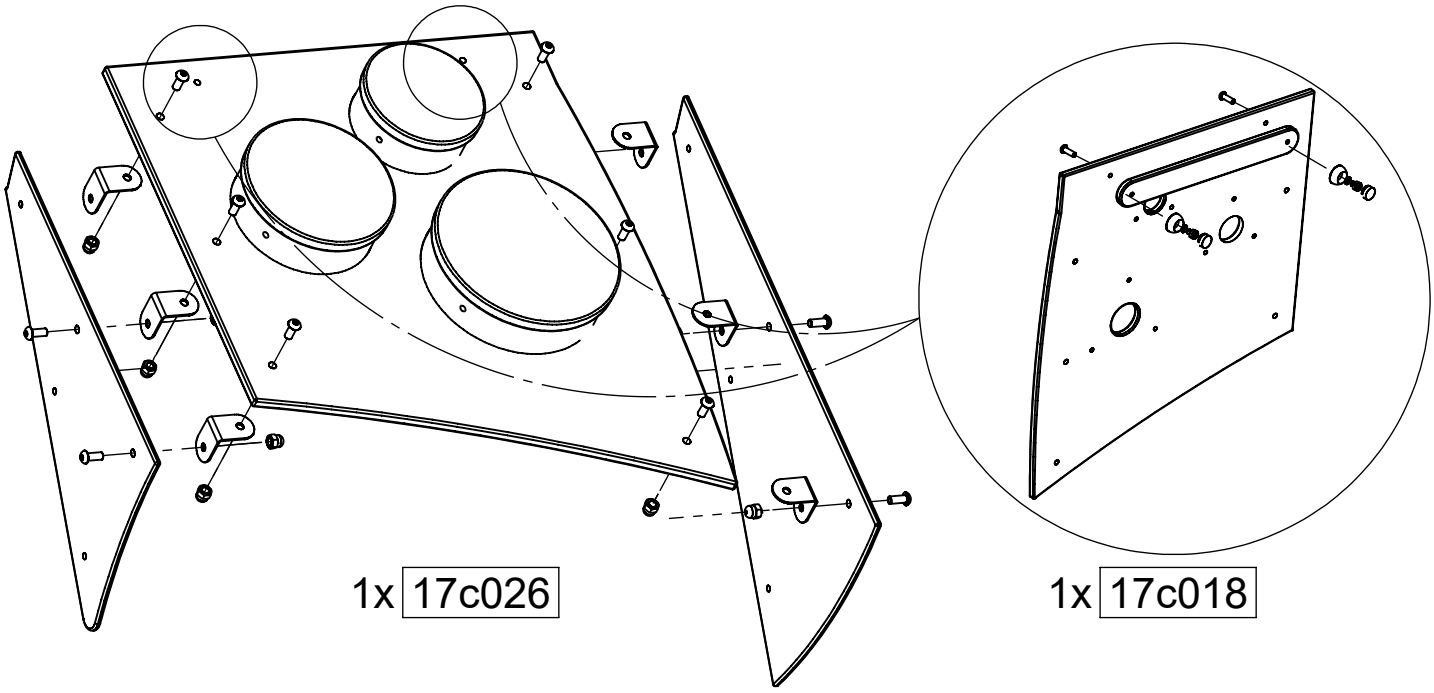

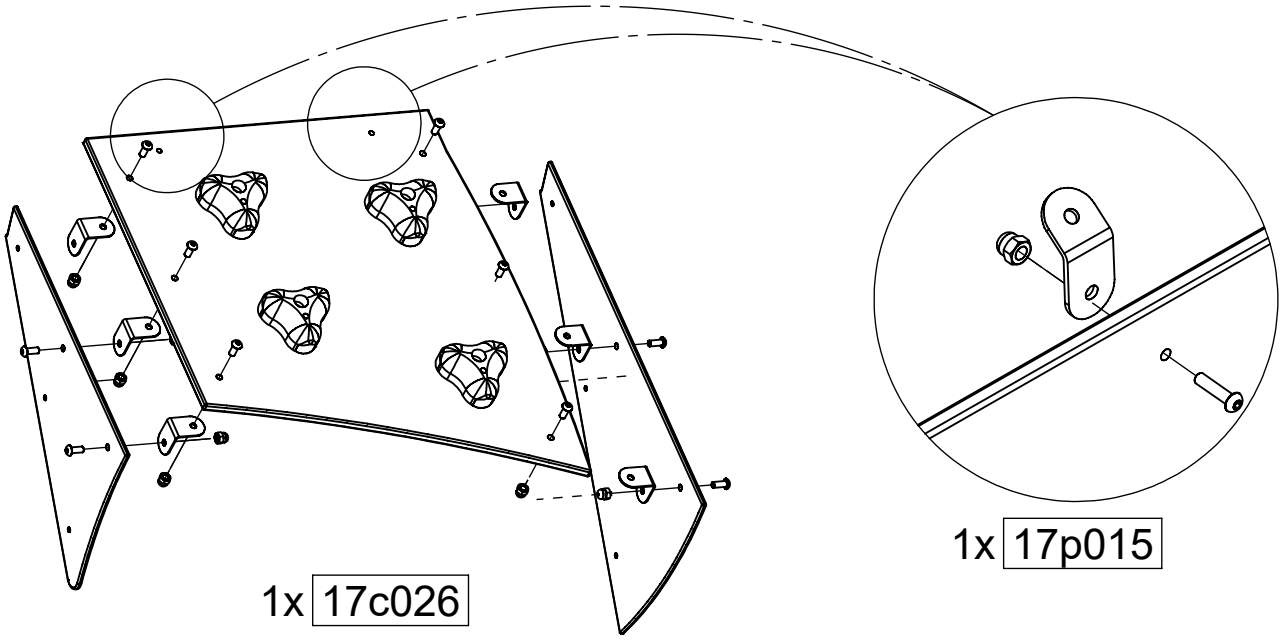

[cm]

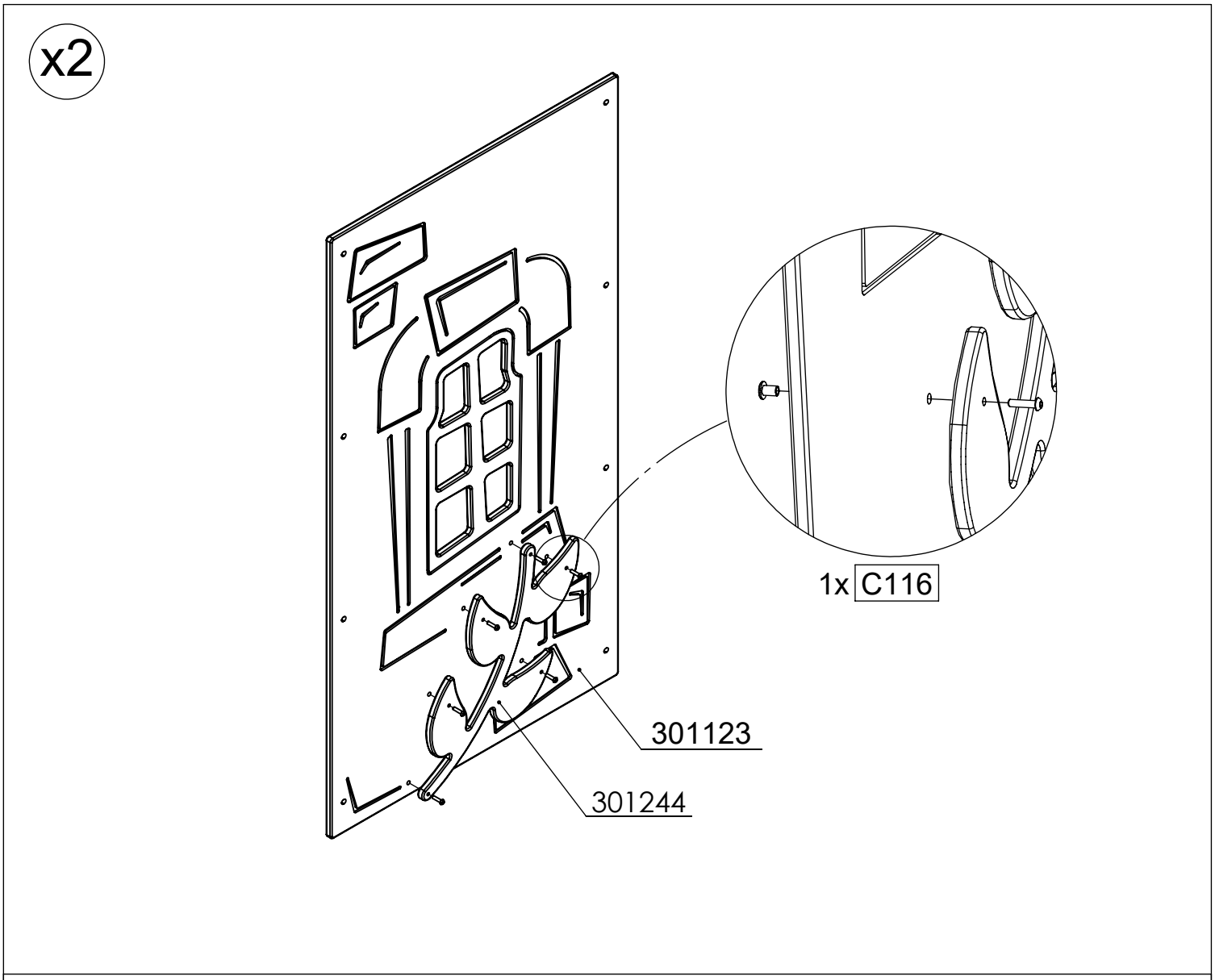
x2
1x C116
301123
301244

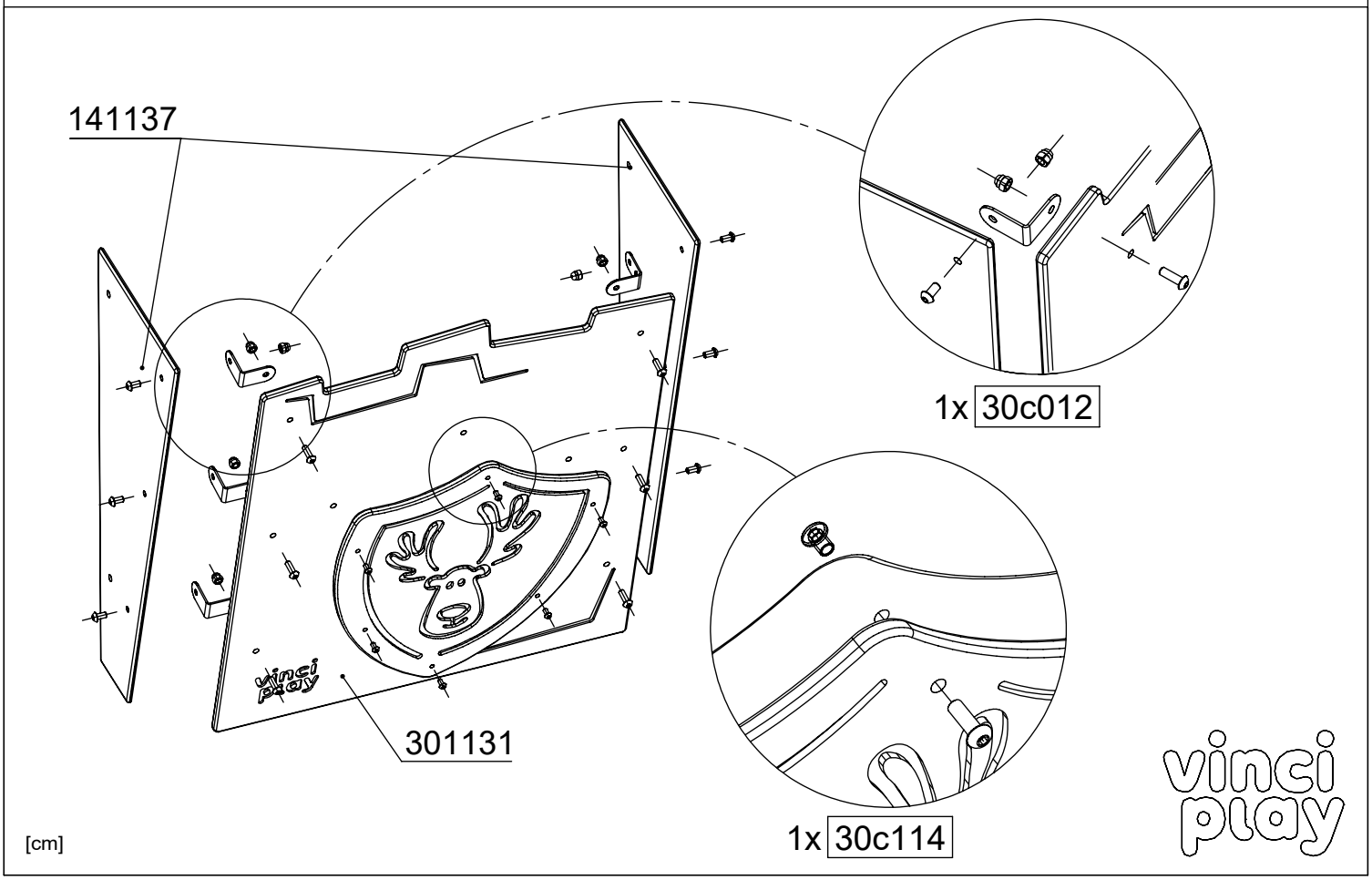
141137
1x 30c012
301131
1x 30c114
[cm]

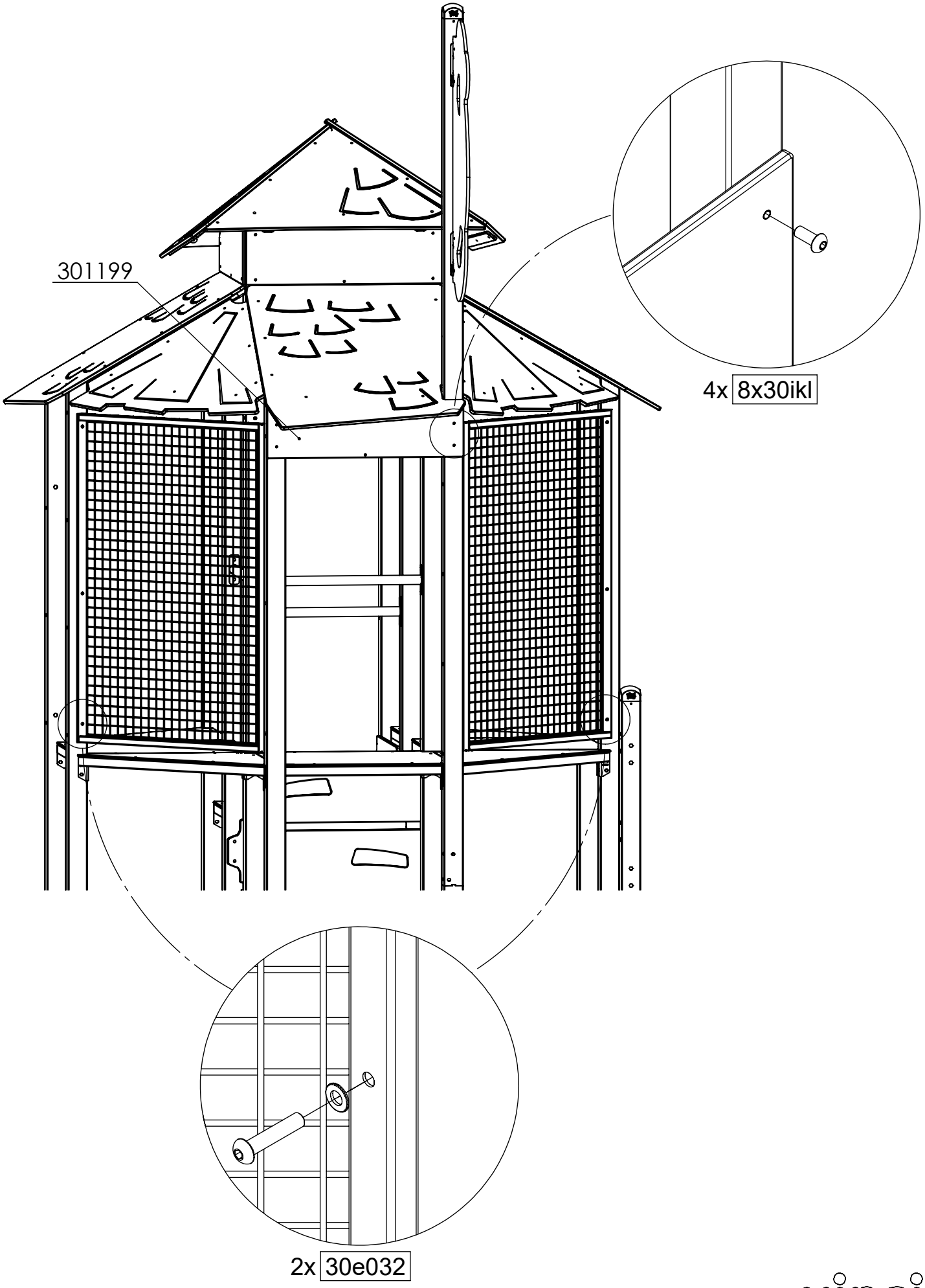

[cm]

vinci play

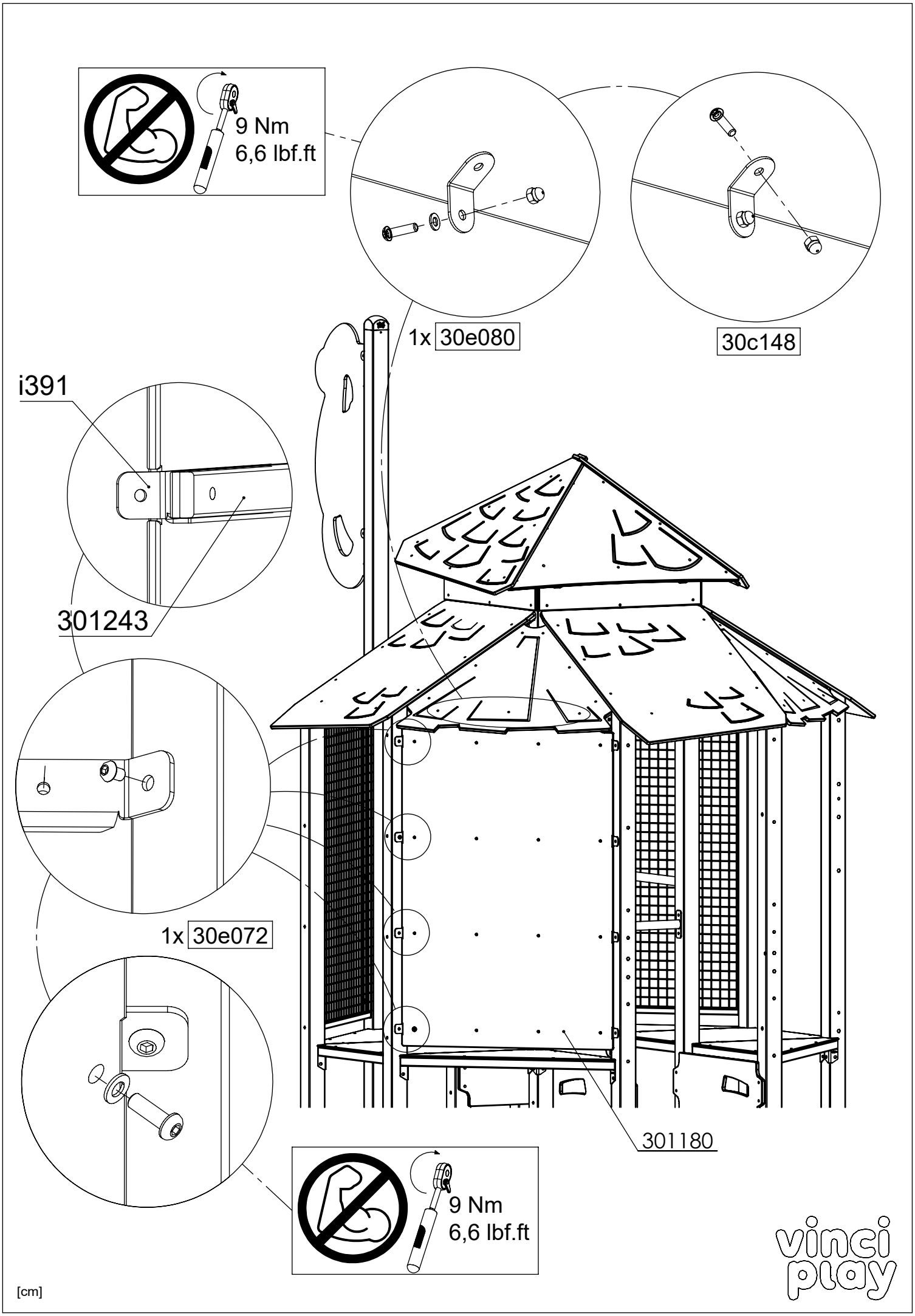
9 Nm
6,6 lbf.ft
1x 30e080
30c148
i391
301243
1x 30e072
301180
9 Nm
6,6 lbf.ft
[cm]
vinci play

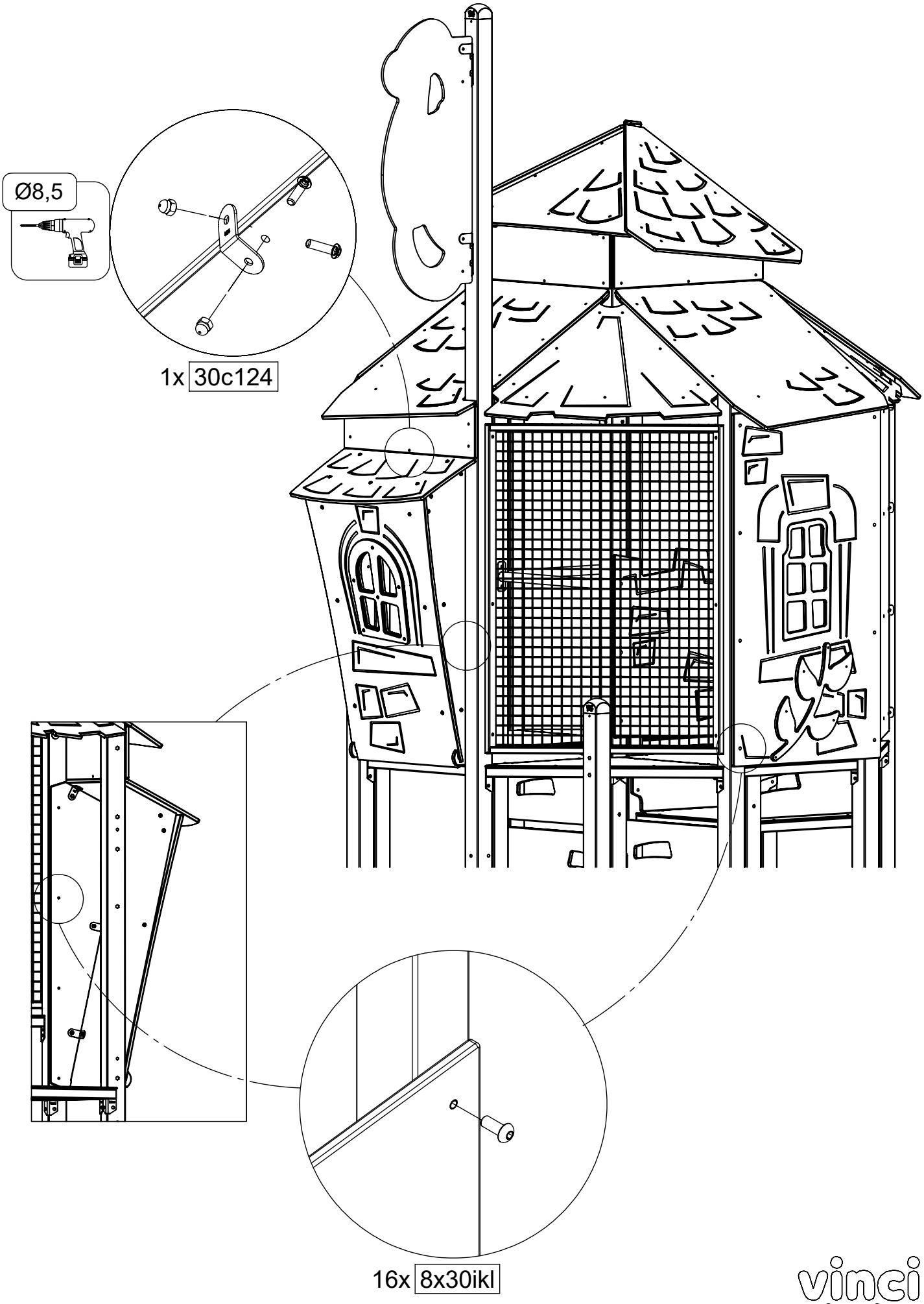
Ø8,5
1x 30c124
16x 8x30ikl
[cm]

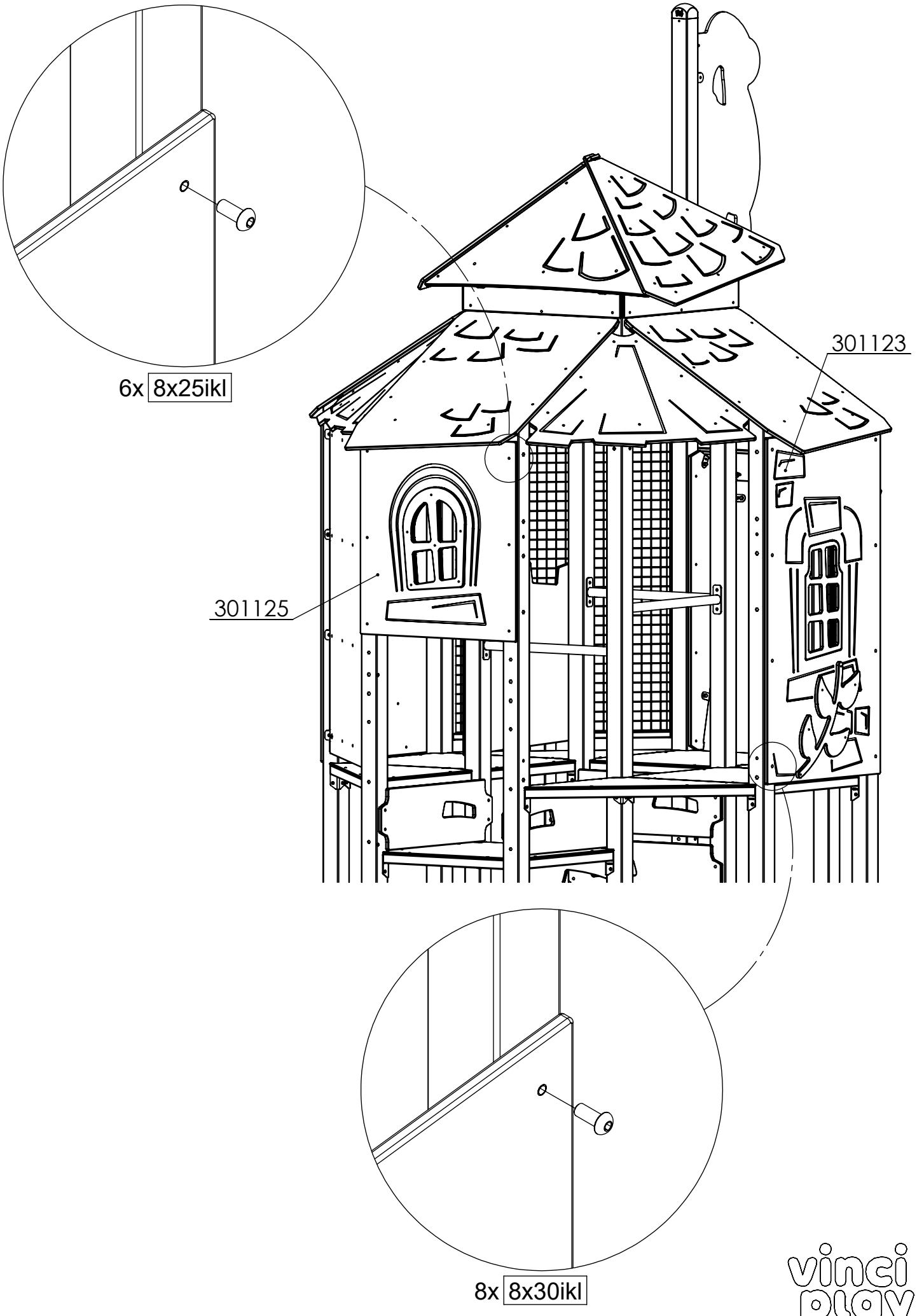
6x 8x25ikl
301123
301125
8x 8x30ikl
[cm]
vinci play

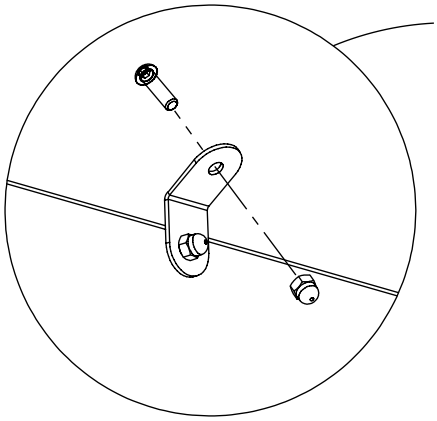

30c148

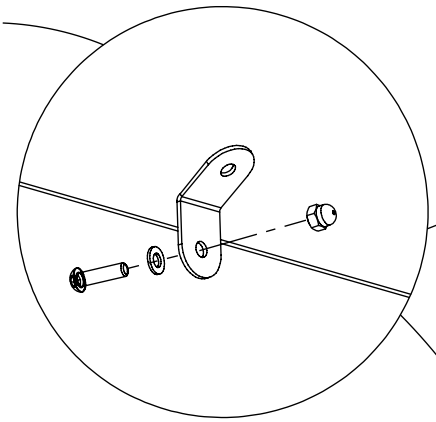

1x 30e080

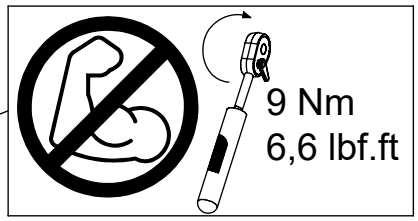

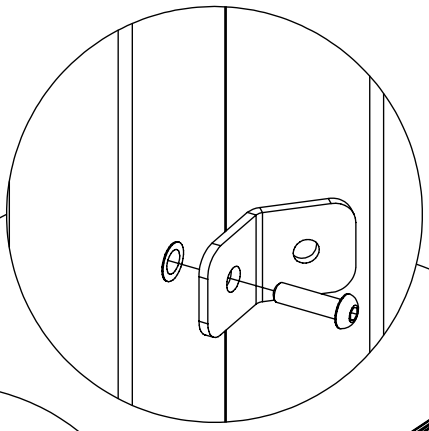

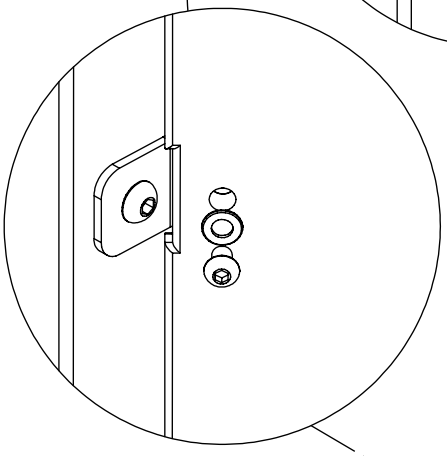

1x 30e084

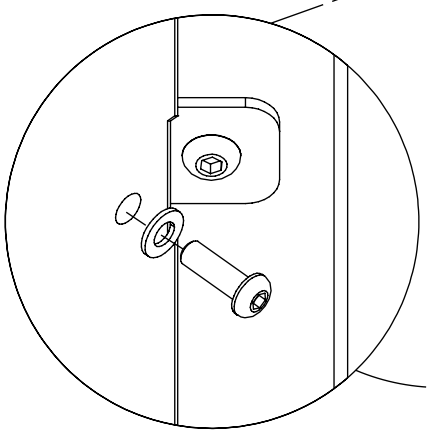

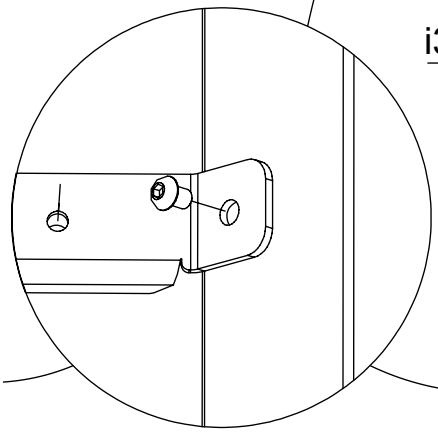

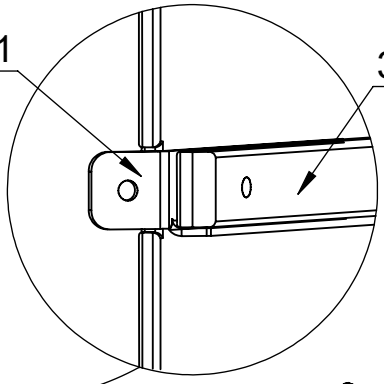

[cm]

vinci play

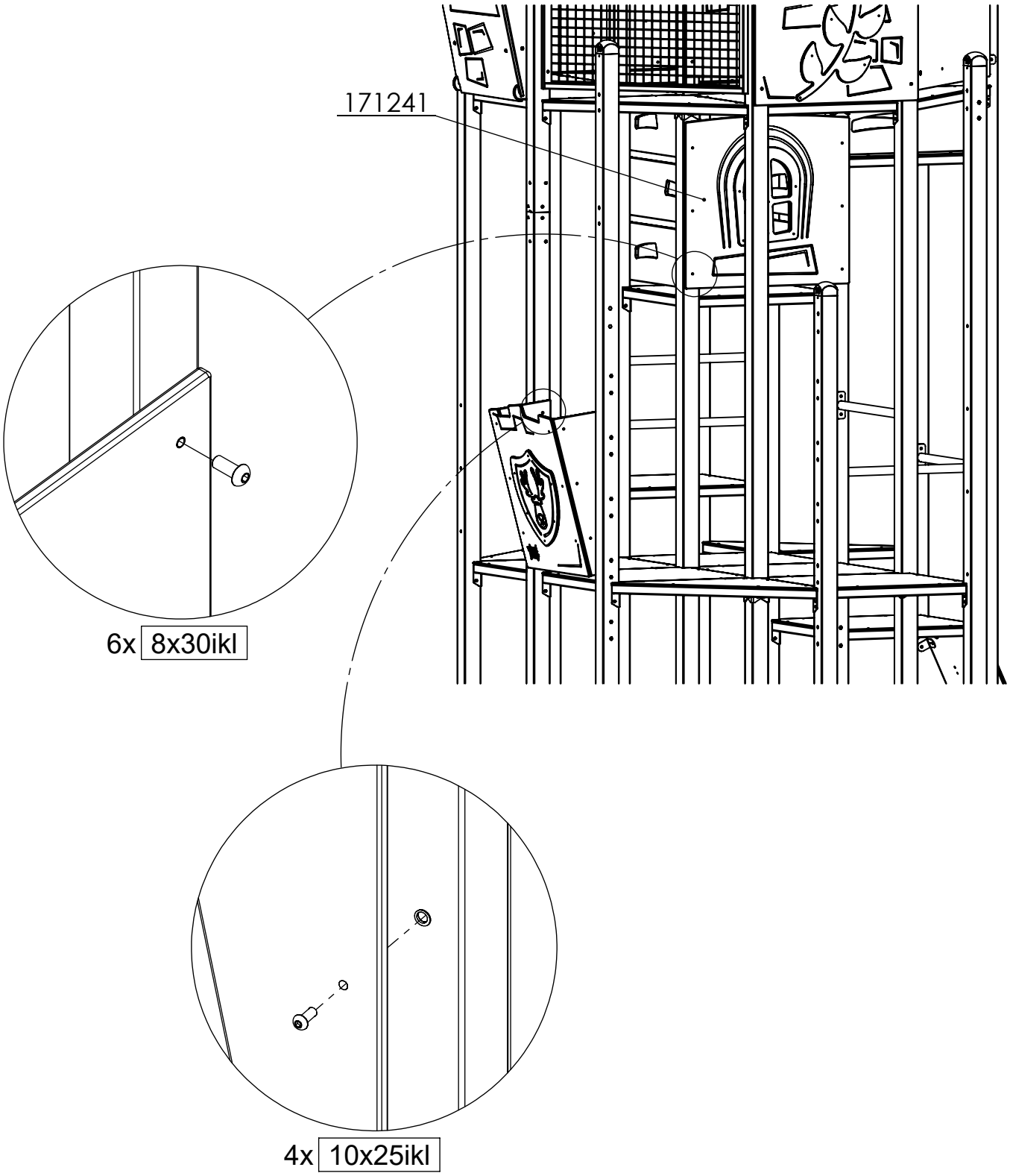

[cm]

vinci play

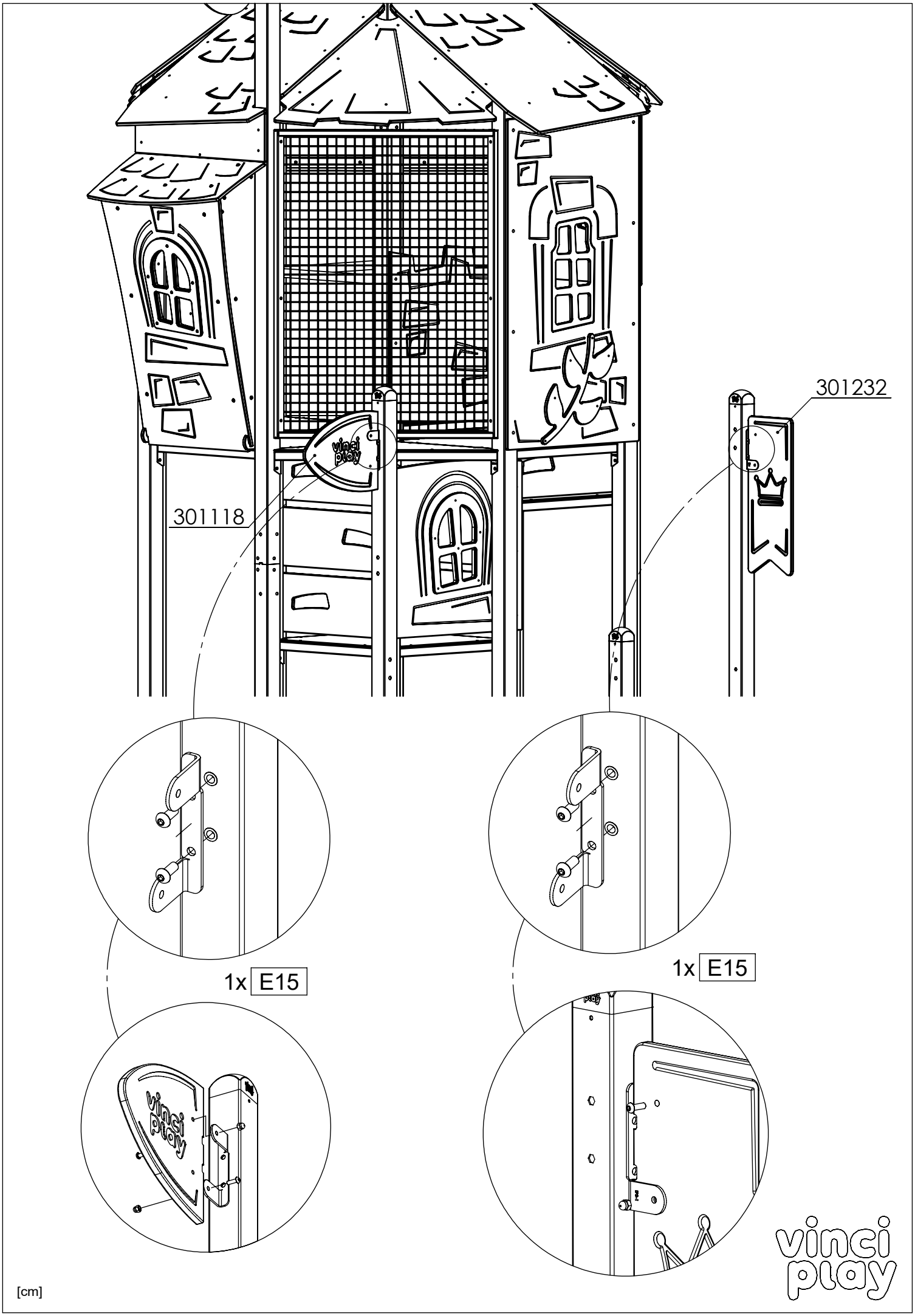
301232
301118
1x E15
1x E15
[cm]

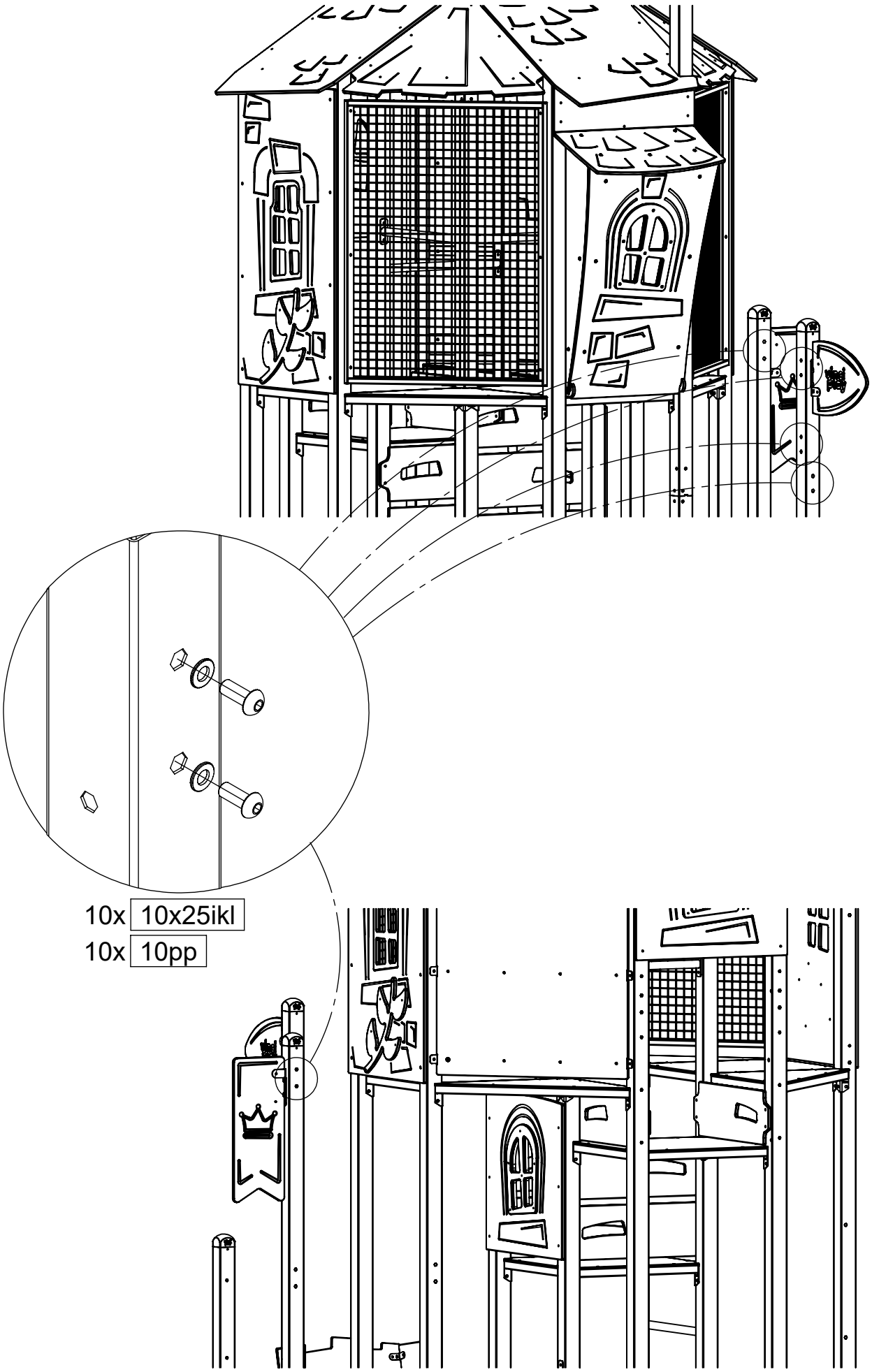

[cm]

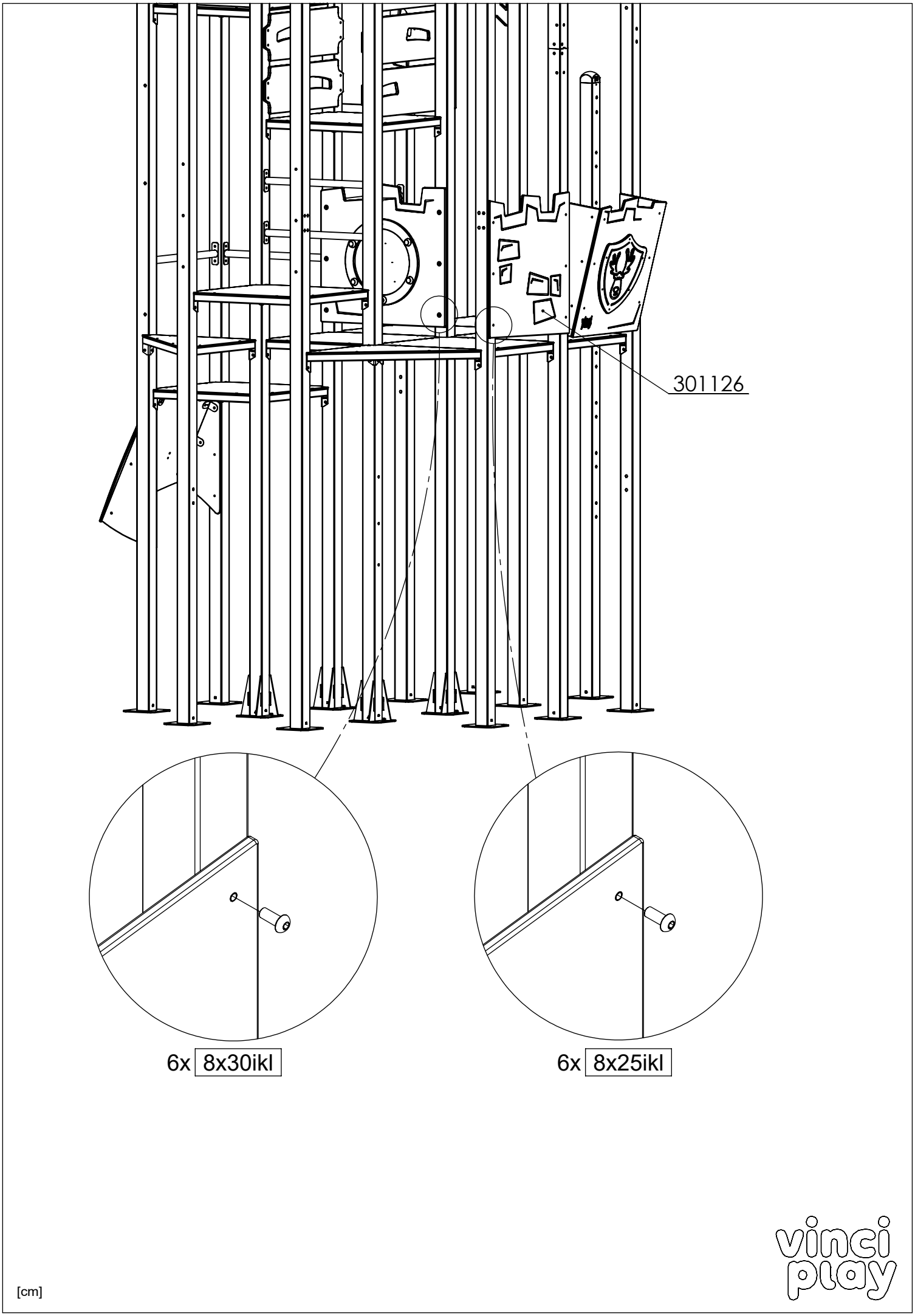
301126
6x 8x30ikl
6x 8x25ikl
[cm]

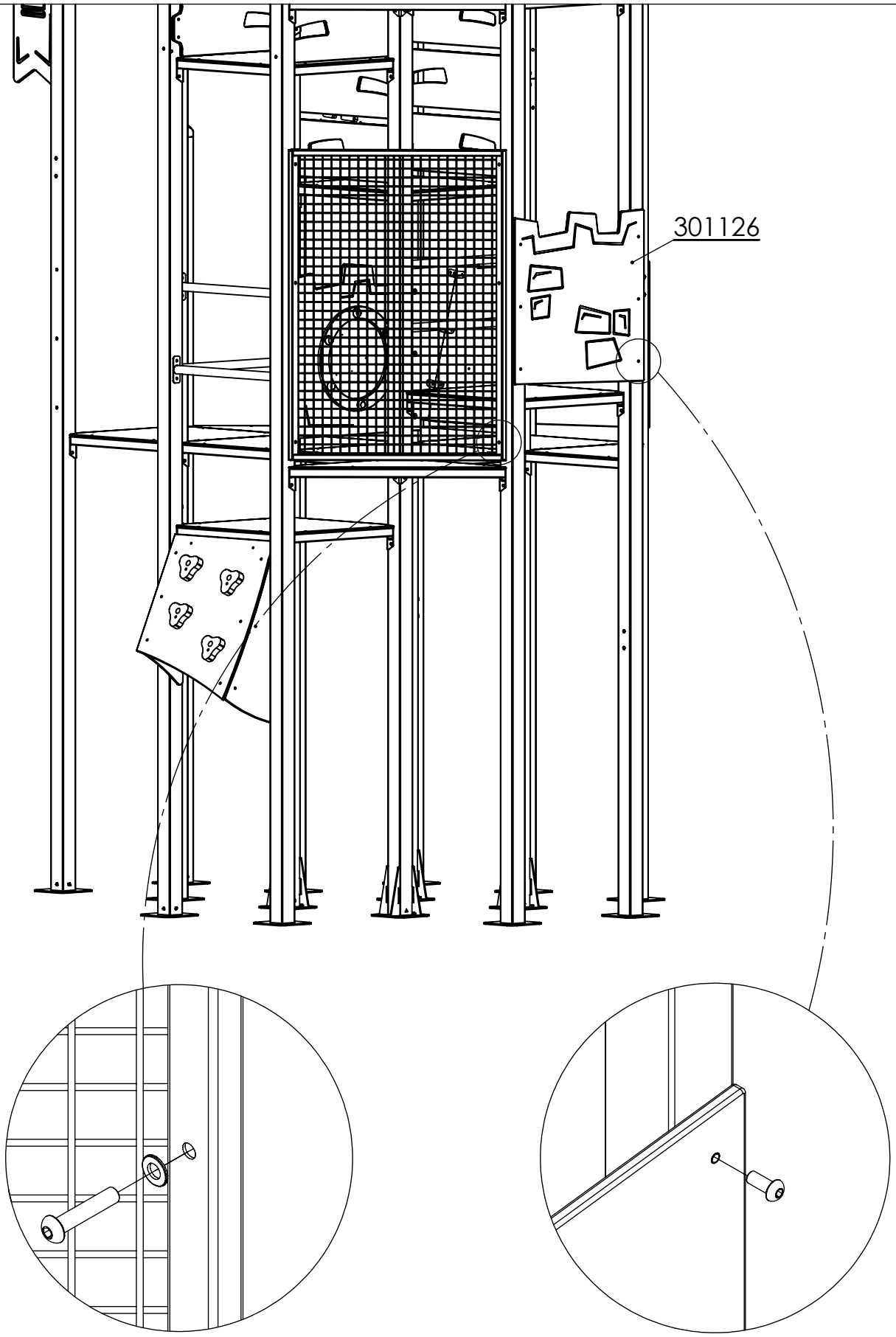

1x 30e032

6x 8x25ikl

[cm]

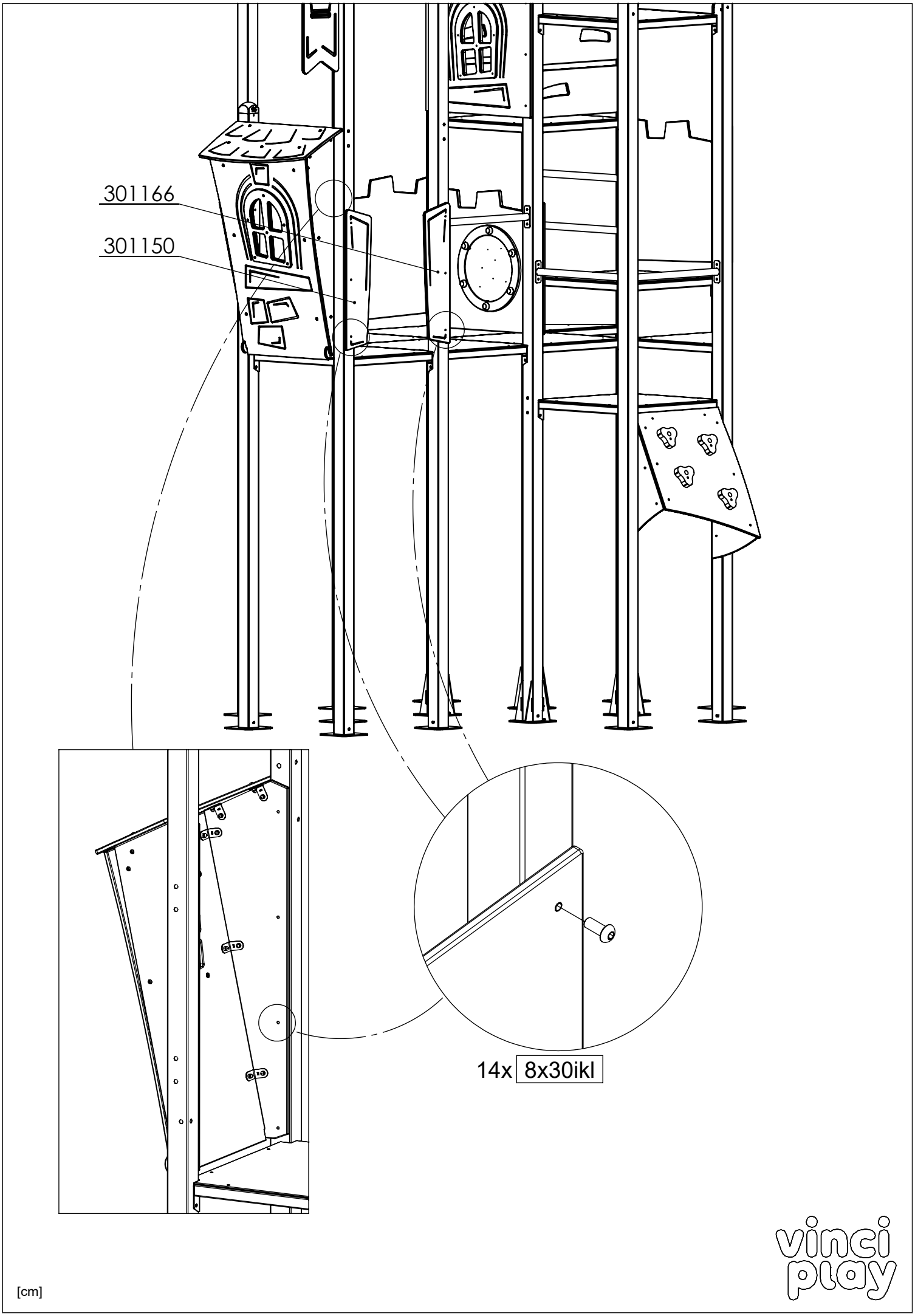
301166
301150
14x 8x30ikl
[cm]
vinci play

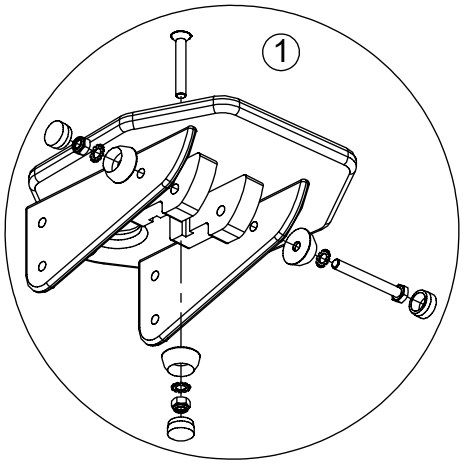

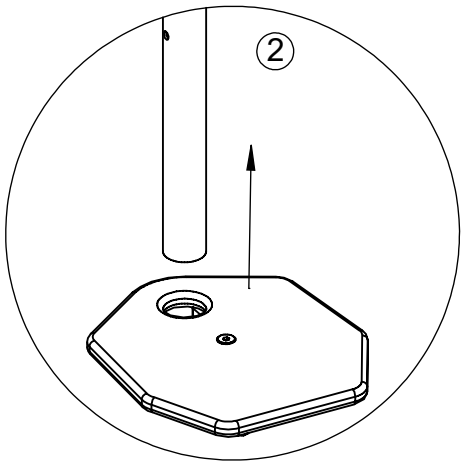

4x WD67

4x WD68

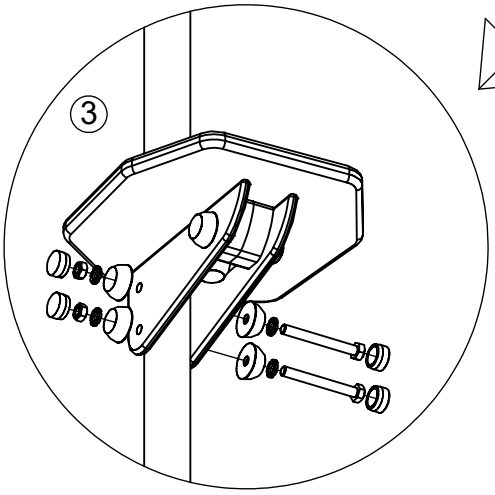

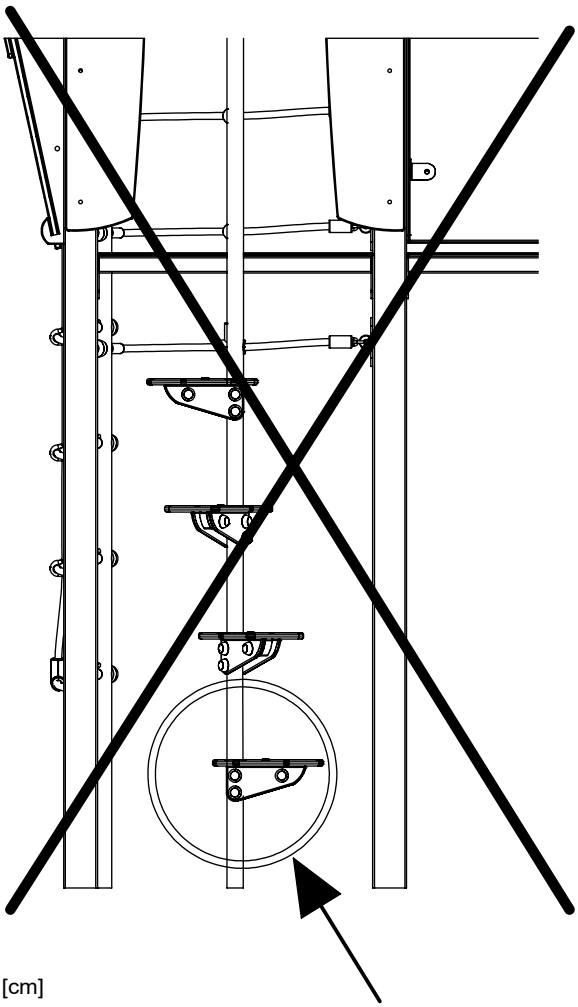

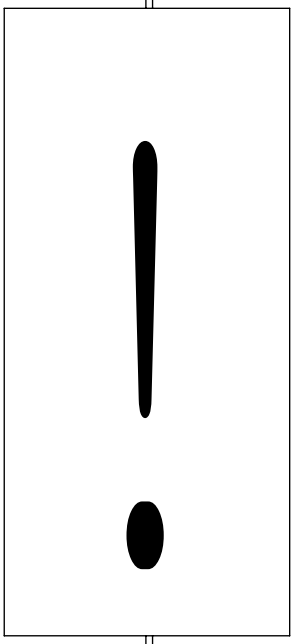

OK

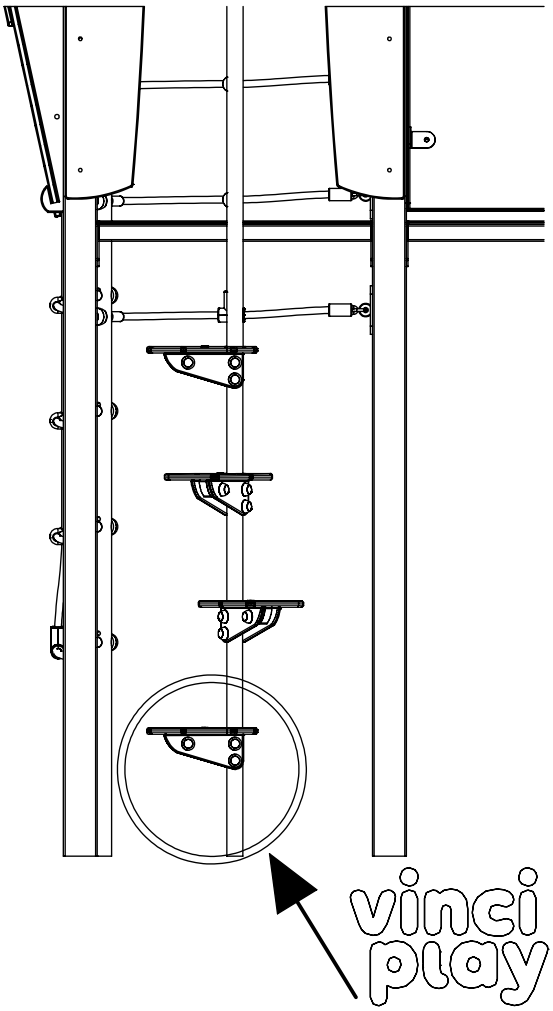

[cm]

vinci play

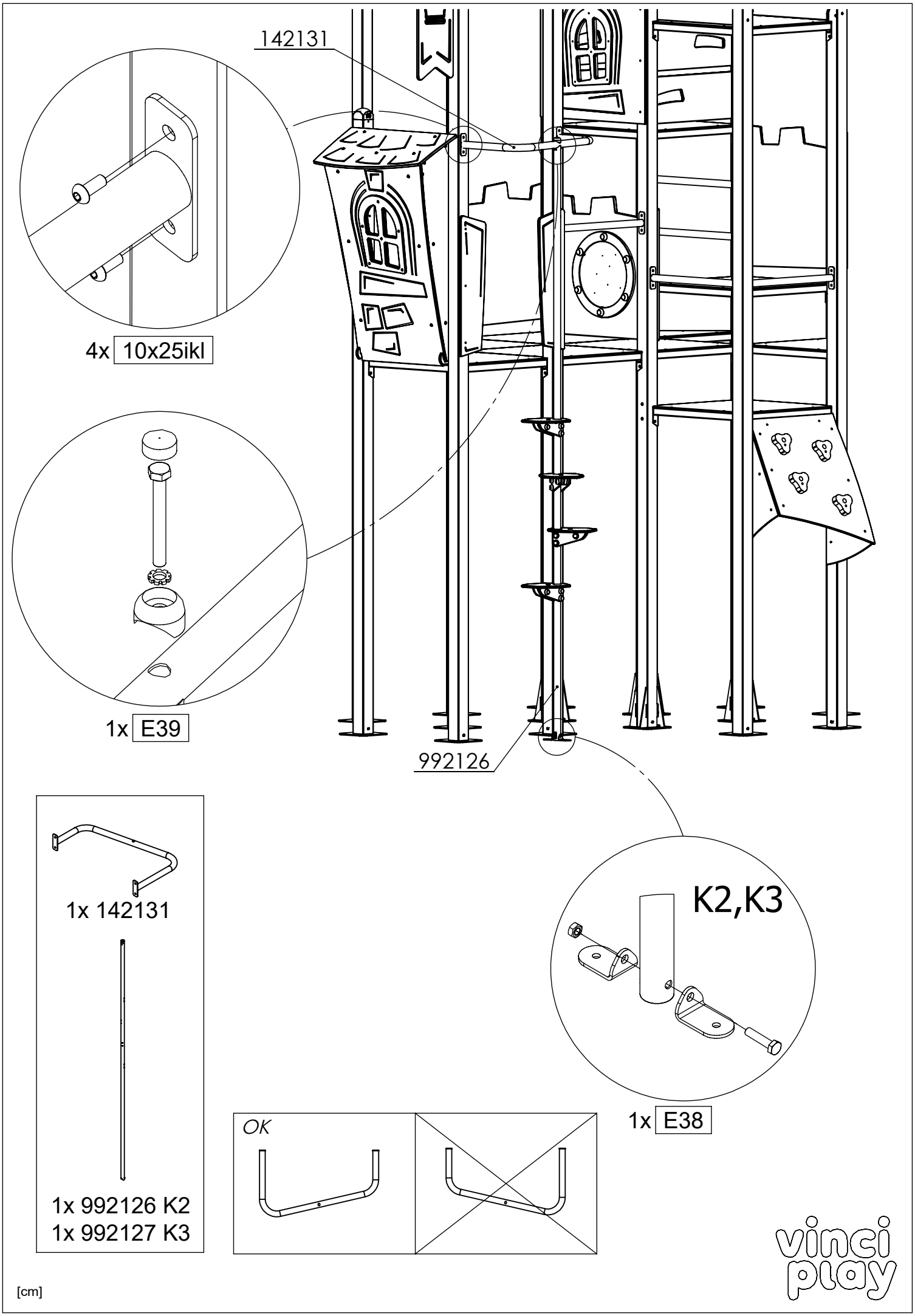
142131
4x 10x25ikl
1x E39
992126
K2,K3
1x E38
1x 142131
1x 992126 K2
1x 992127 K3
OK
[cm]
vinci play

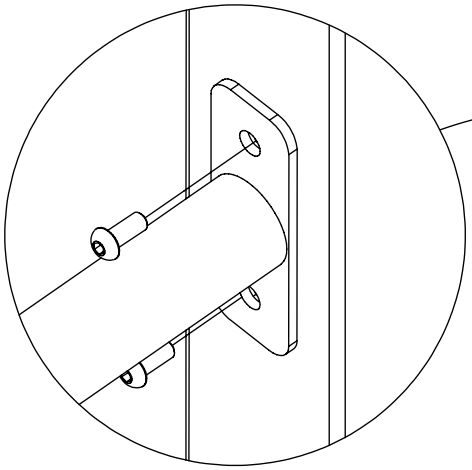

4x 10x25ikl

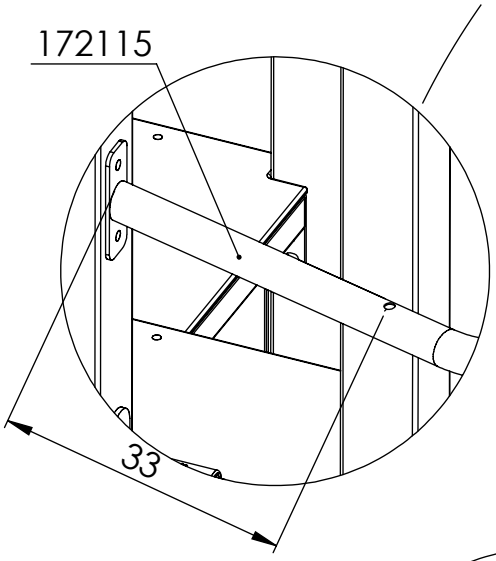

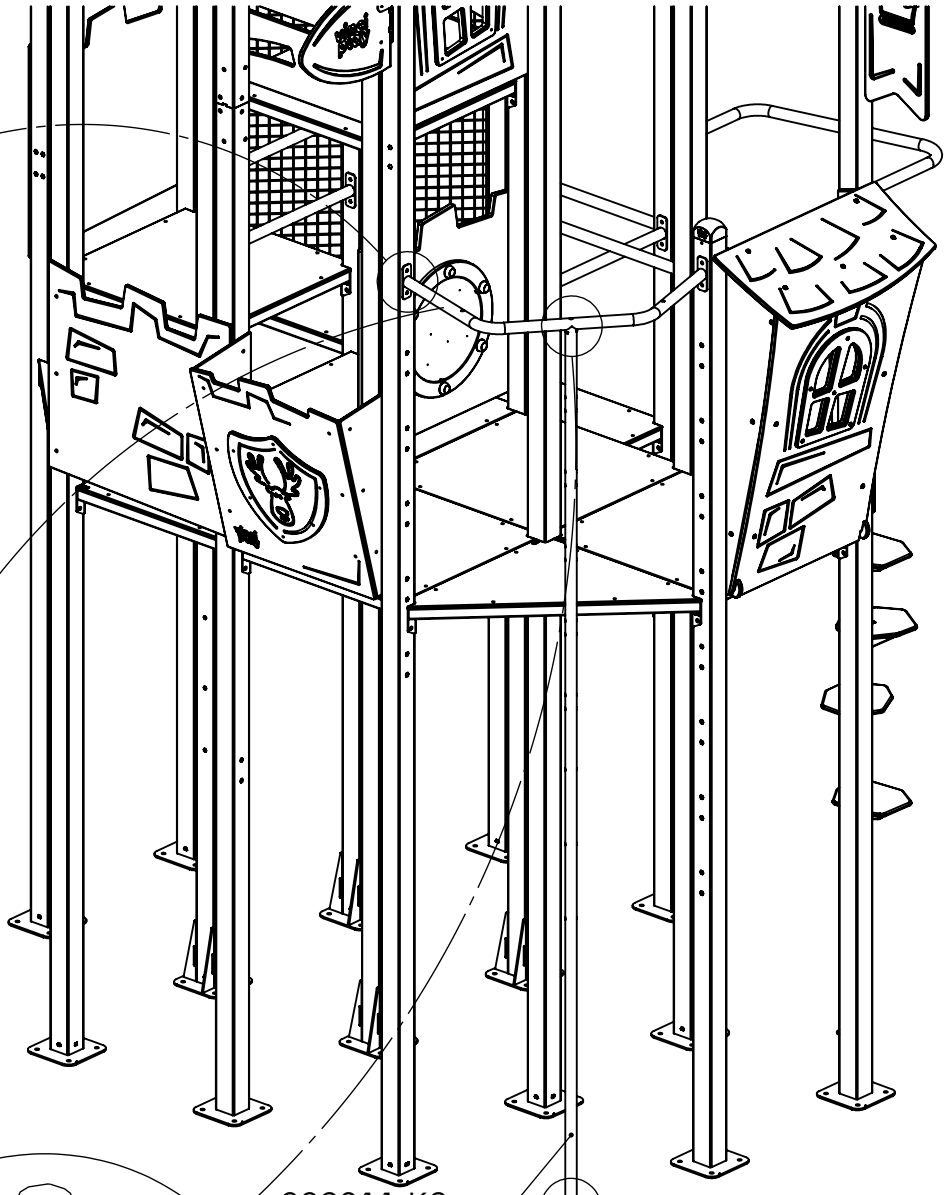

992311 K2
992355 K3

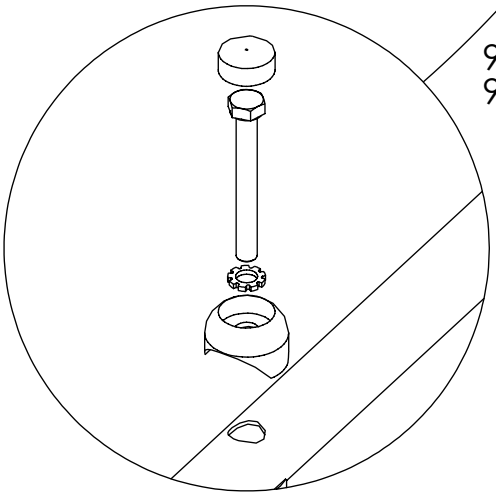

1x E39

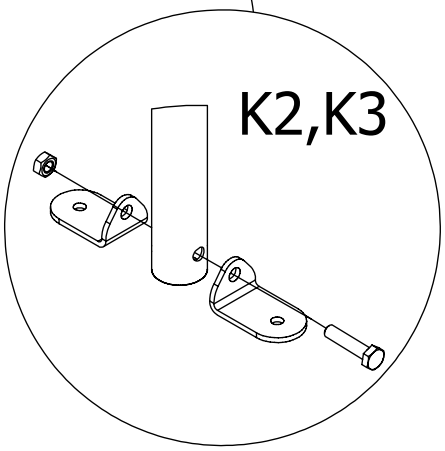

1x E38

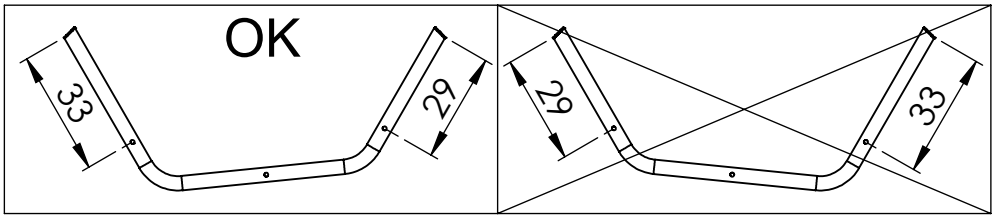

[cm]

vinci play

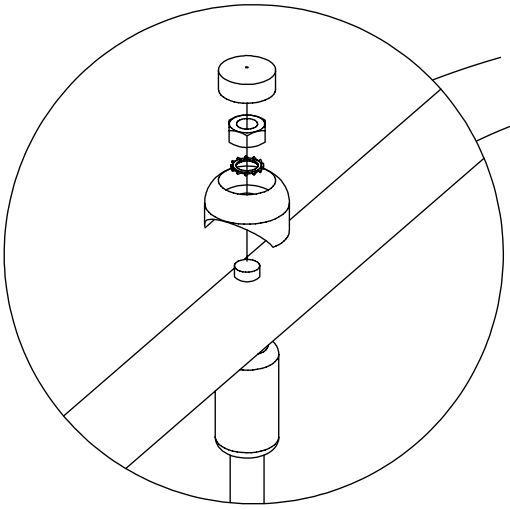

1x 30e016

1x 30e019

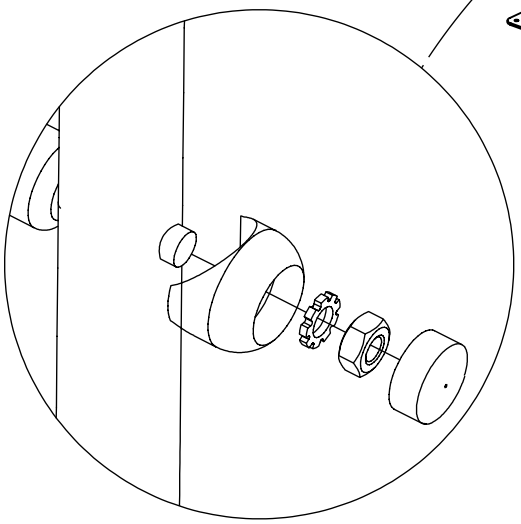

30e016

30e019

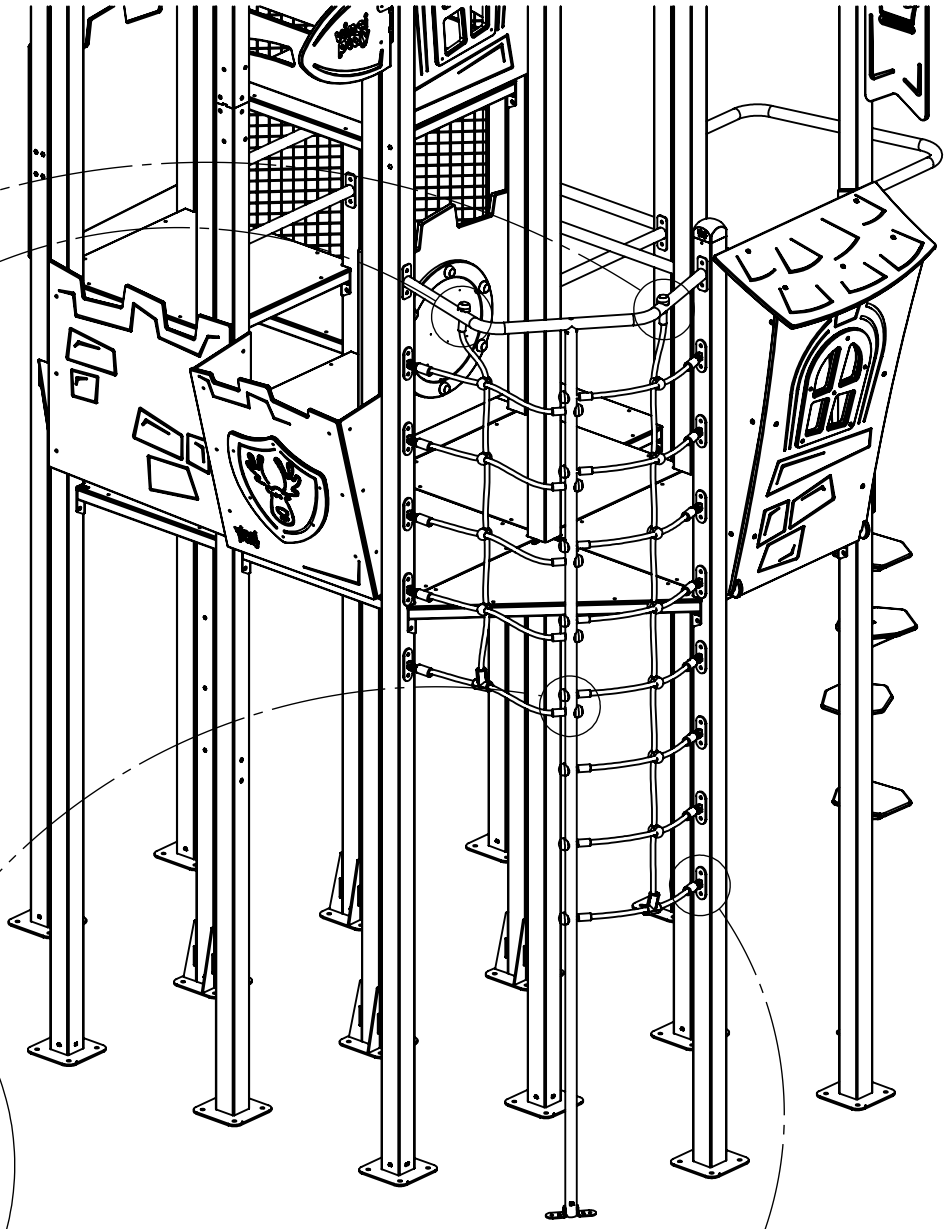

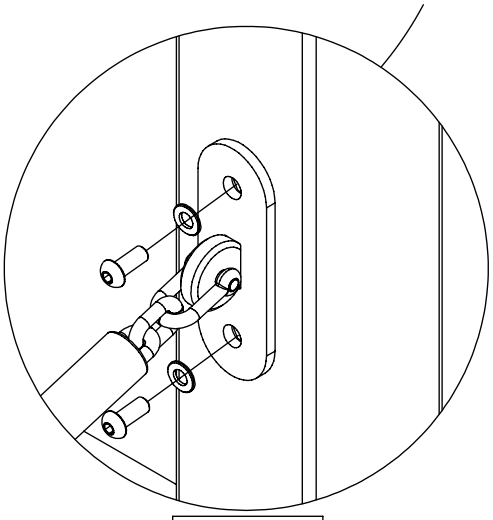

1x 30e075

26x 10x25ikl

26x 10pp

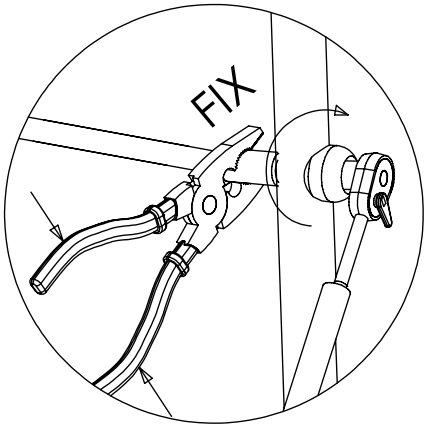

[cm]

vinci play

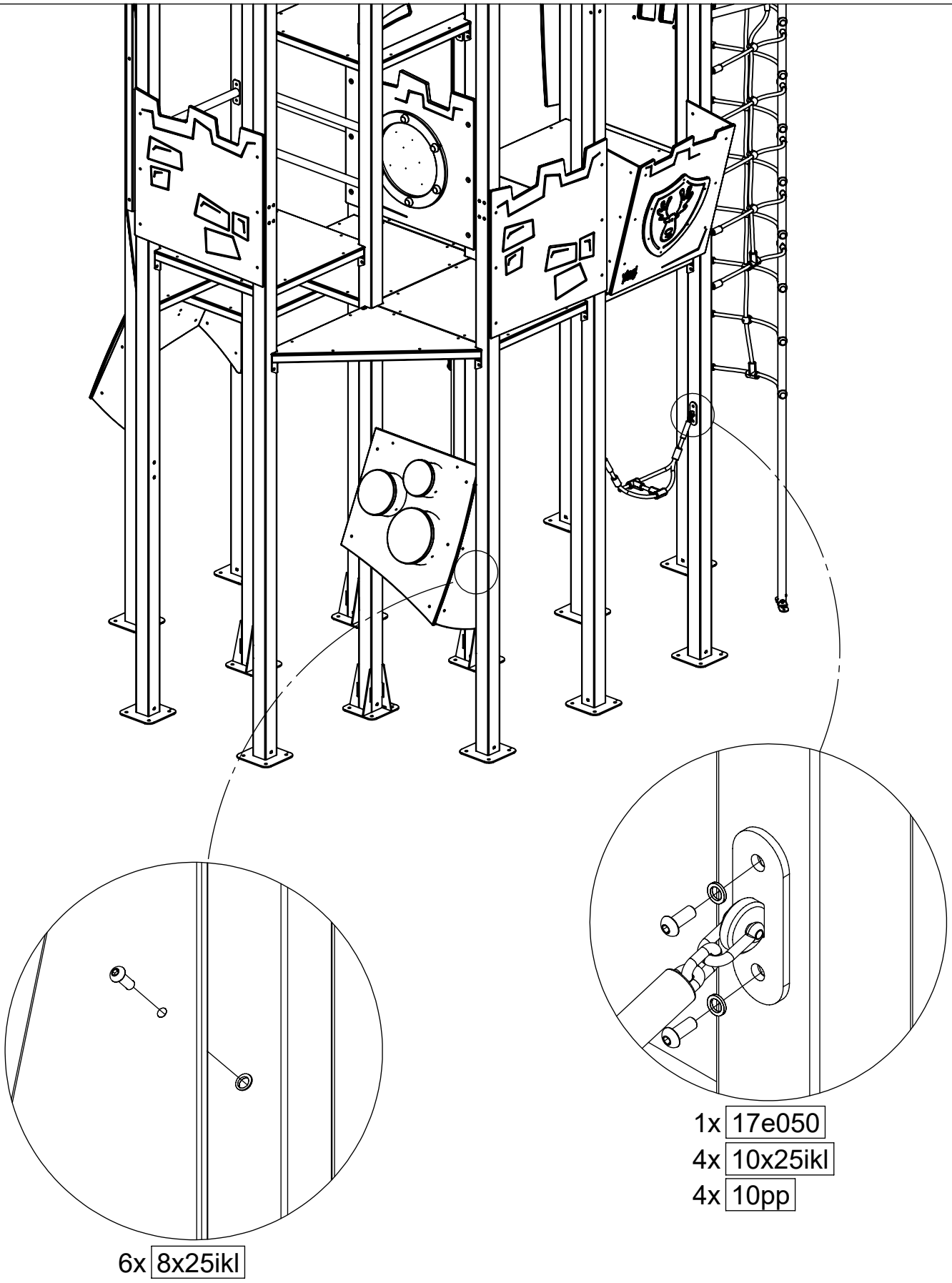

[cm]

vinci play

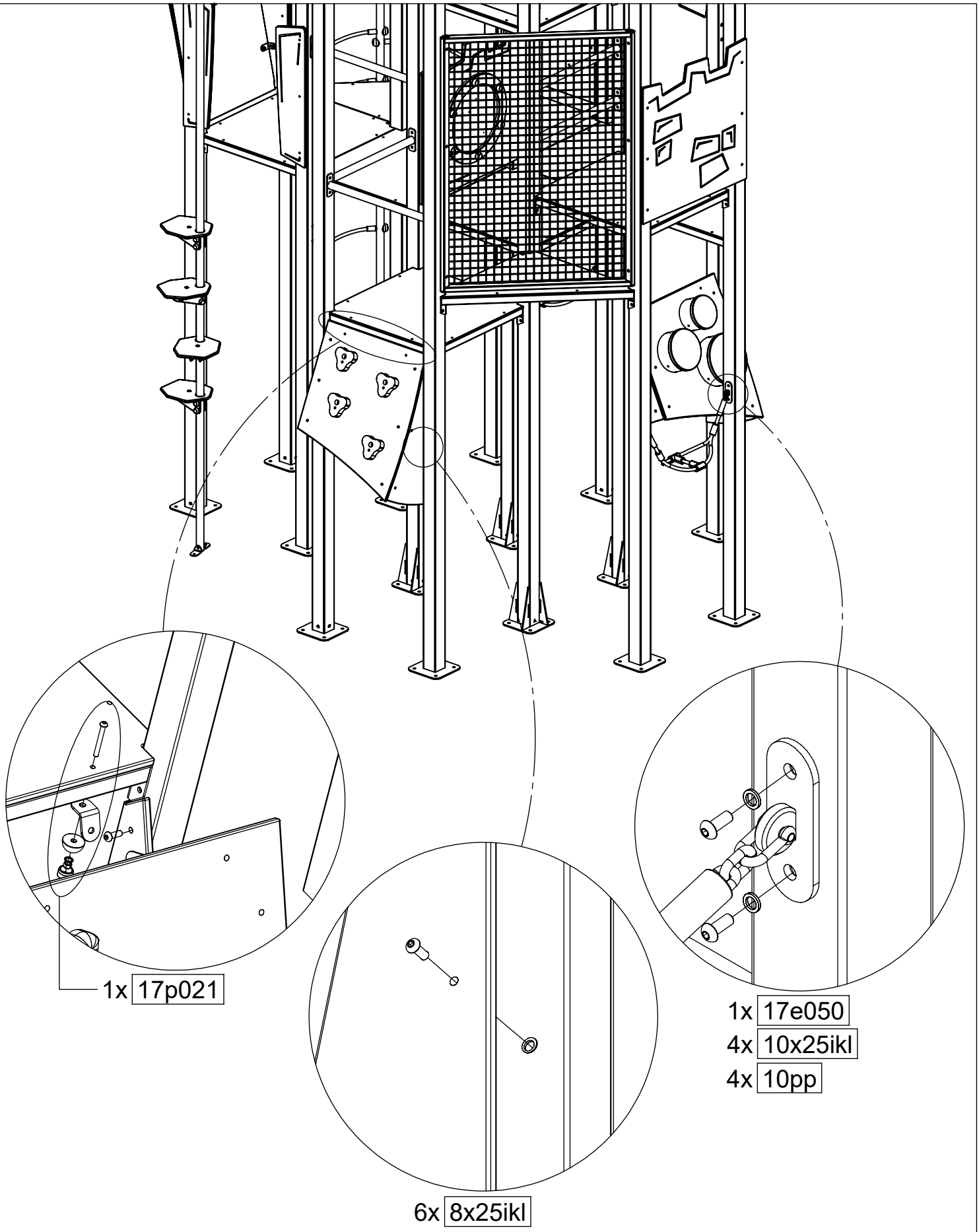

[cm]

vinci play

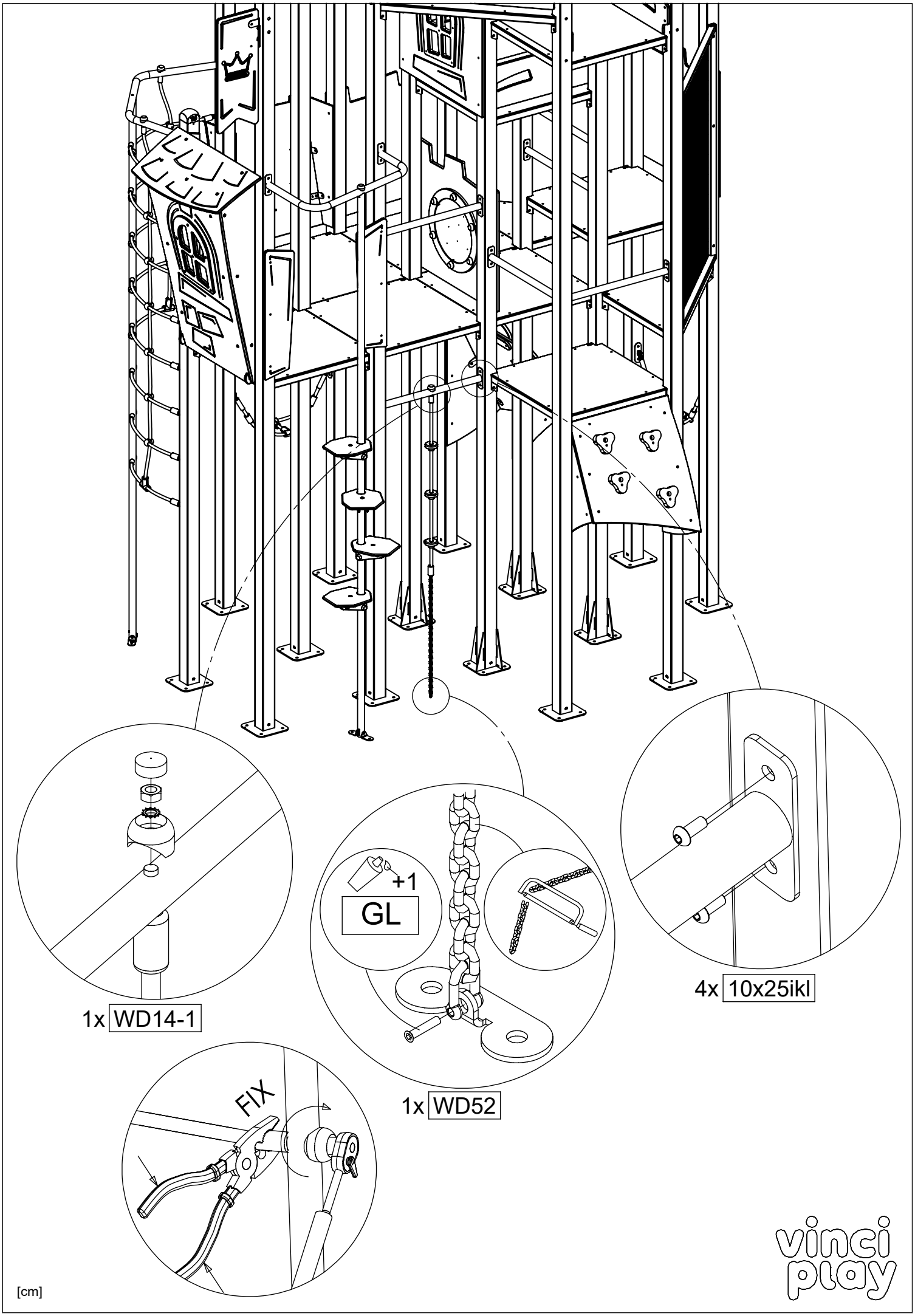
+1
GL
1x WD14-1
1x WD52
4x 10x25ikl
FIX
[cm]
vinci play

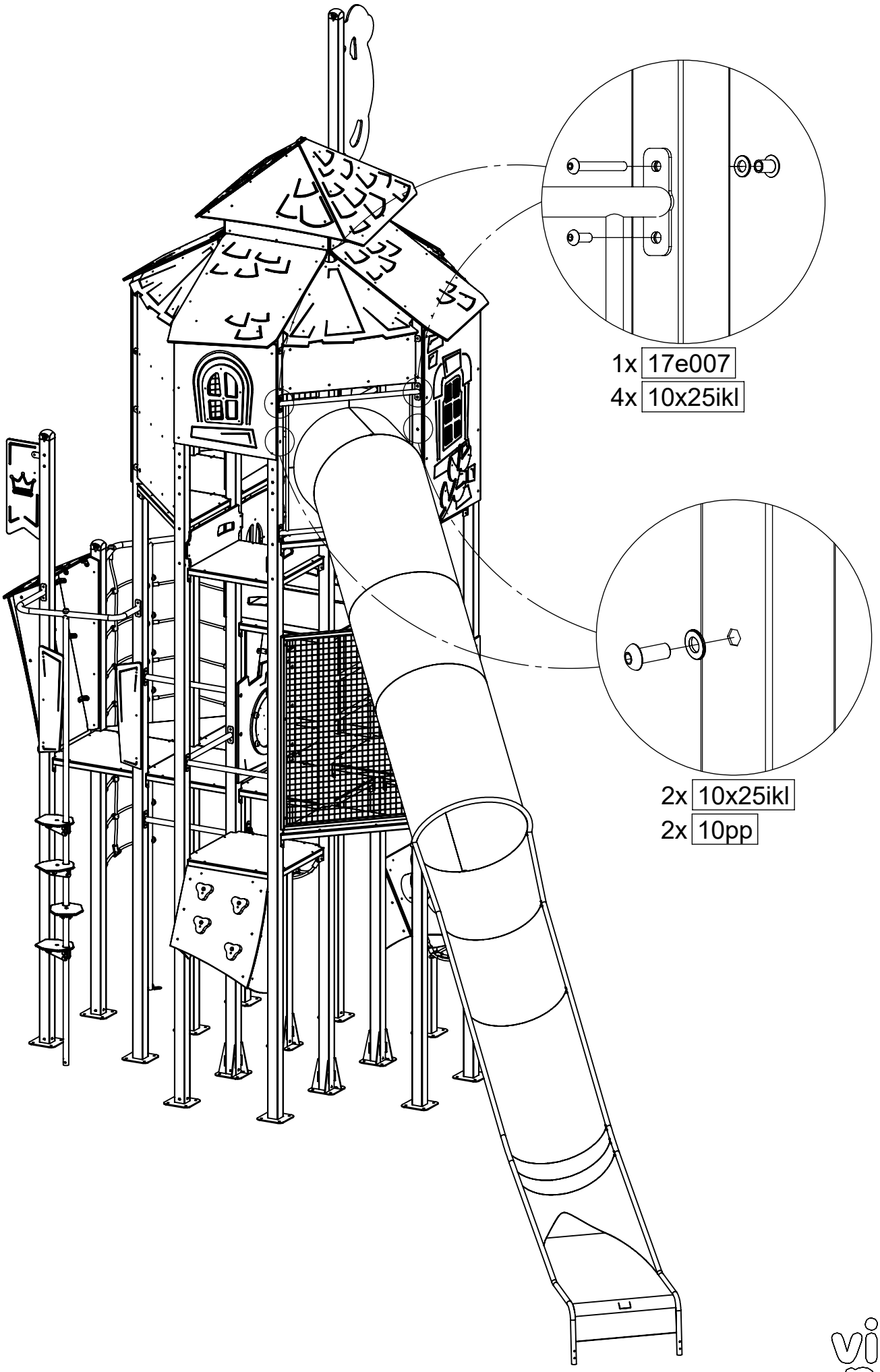

[cm]

vinci play

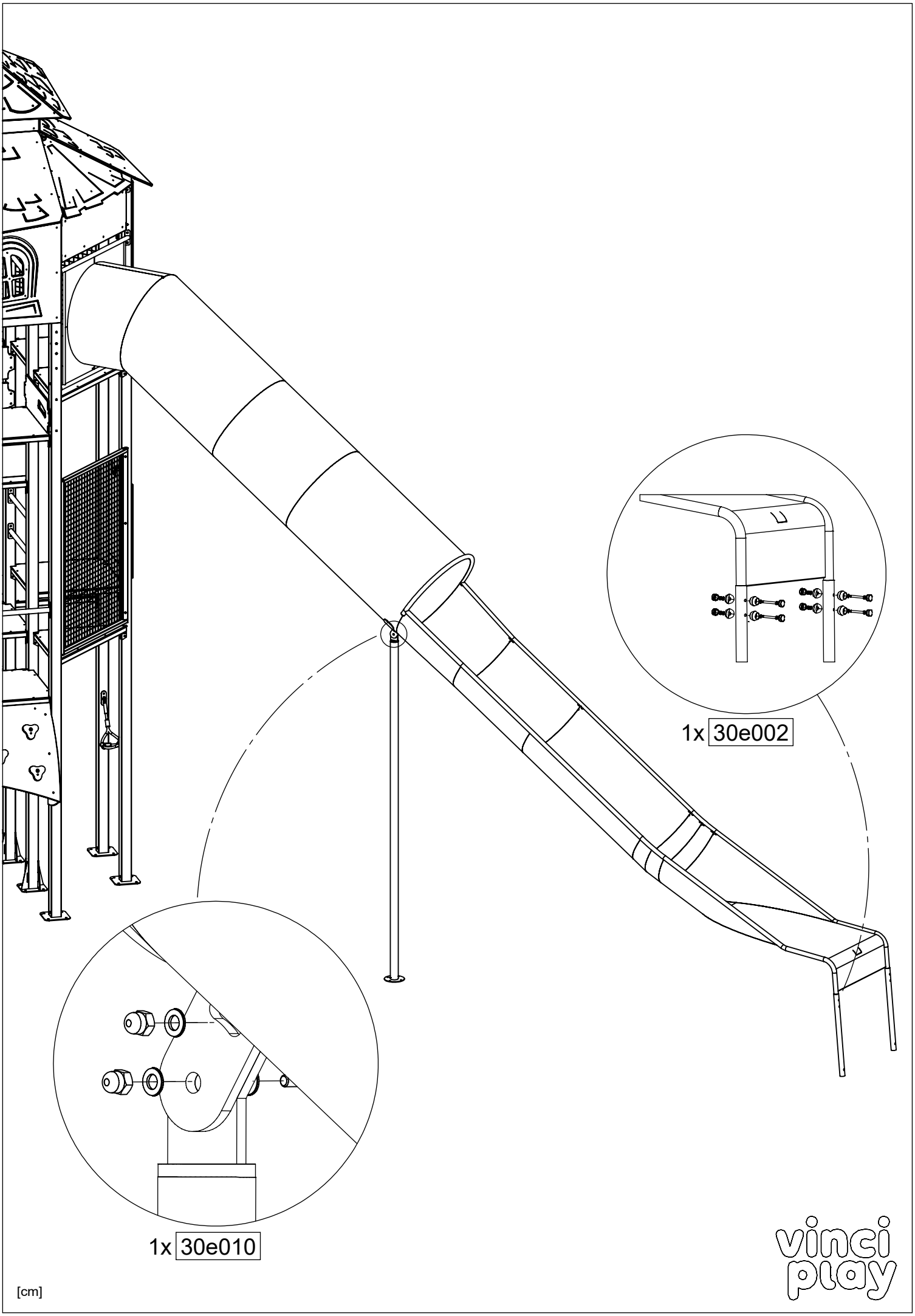
1x 30e002
1x 30e010
[cm]
vinci play

3060-1.03S2

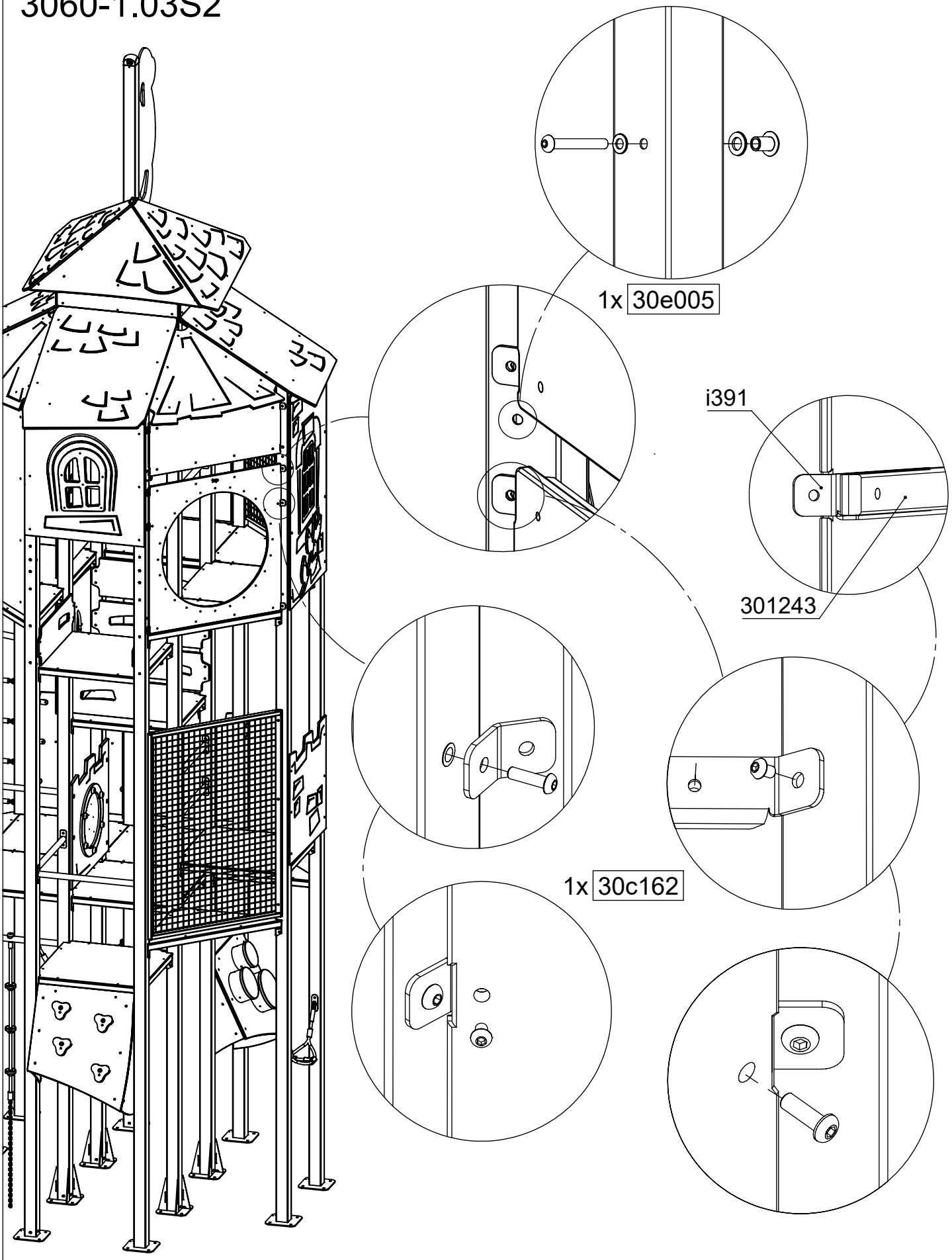

[cm]

vinci play

3060-1.03S2

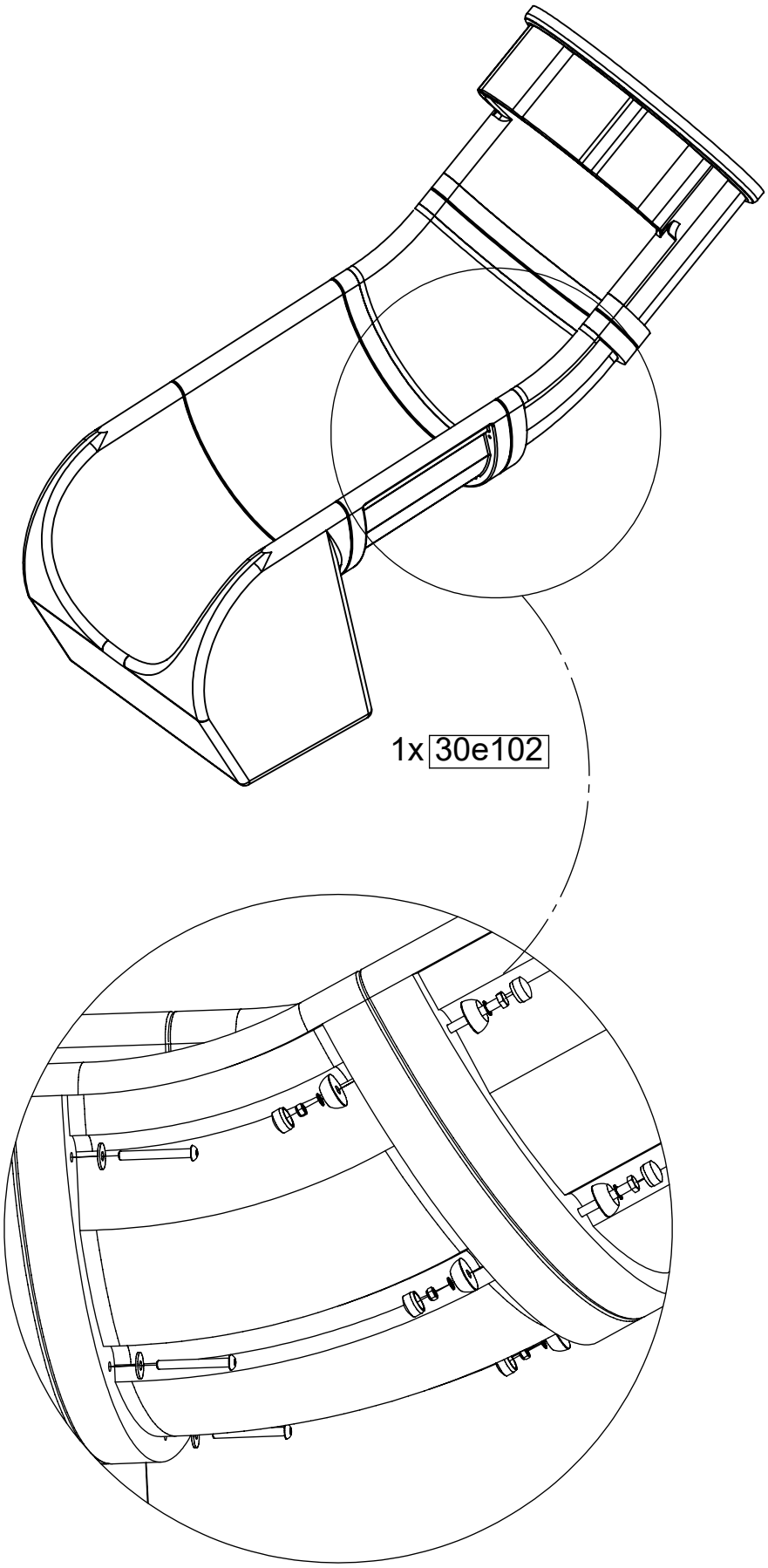

[cm]

3060-1.03S2

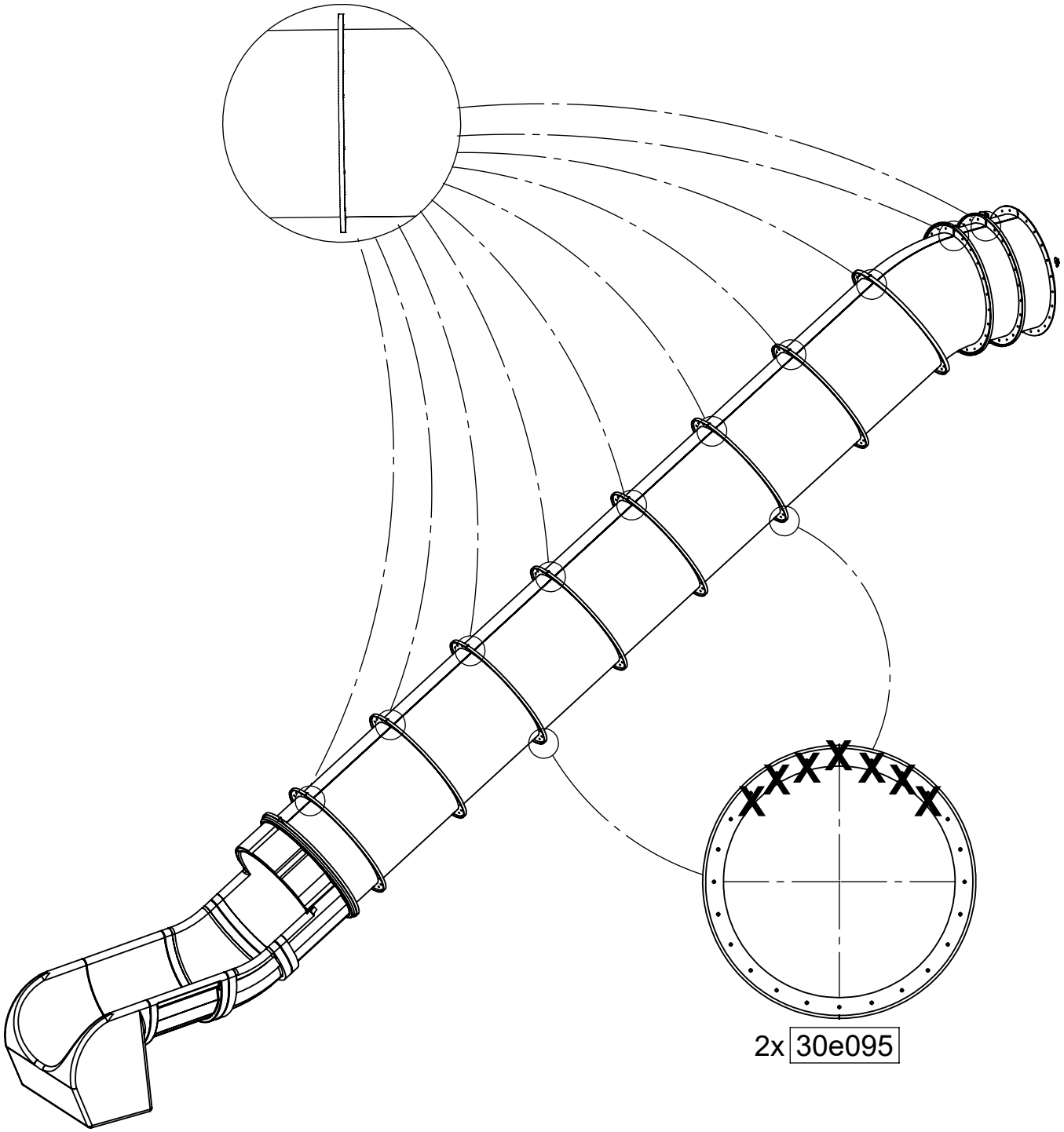

[cm]

3060-1.03S2

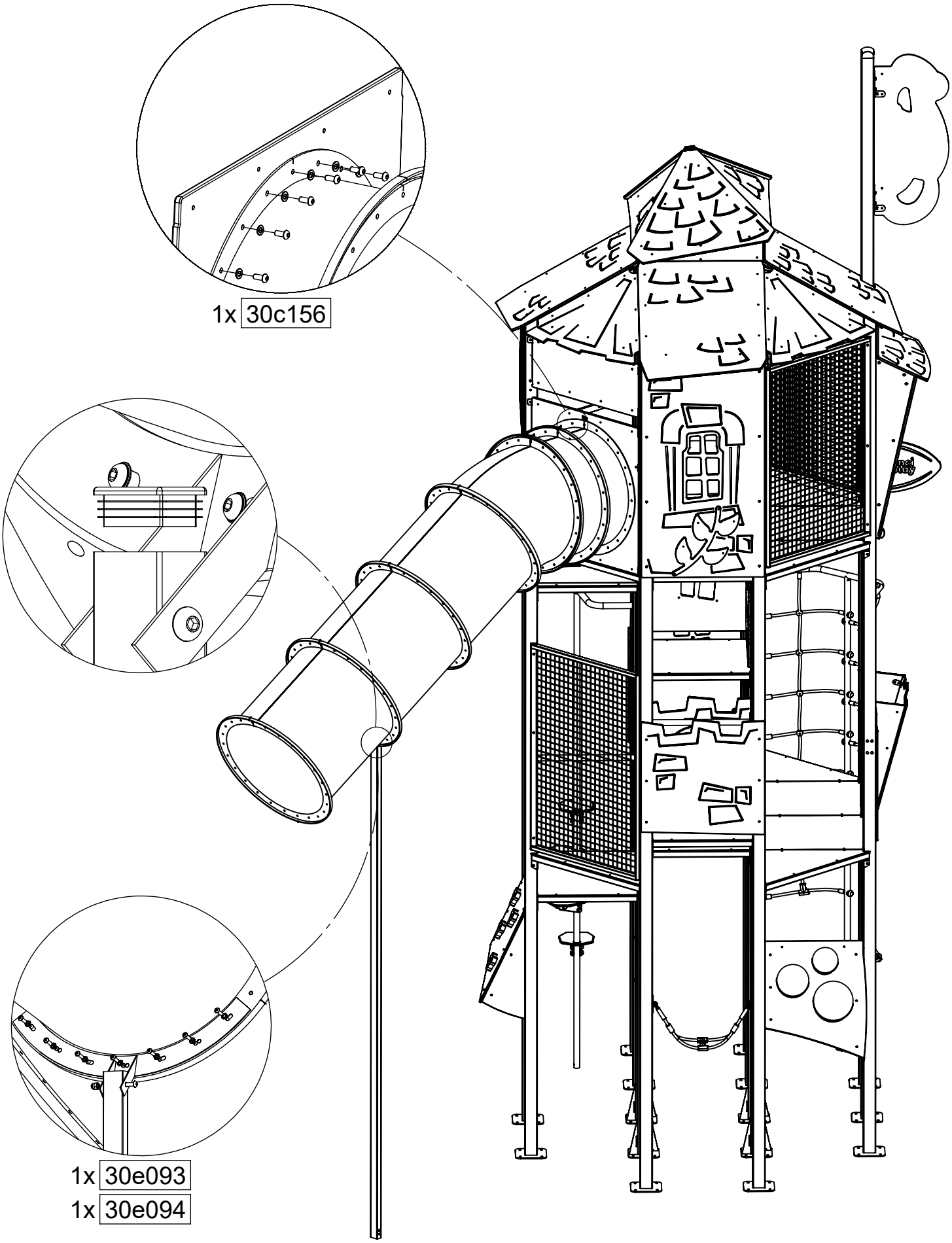

[cm]

3060-1.03S2

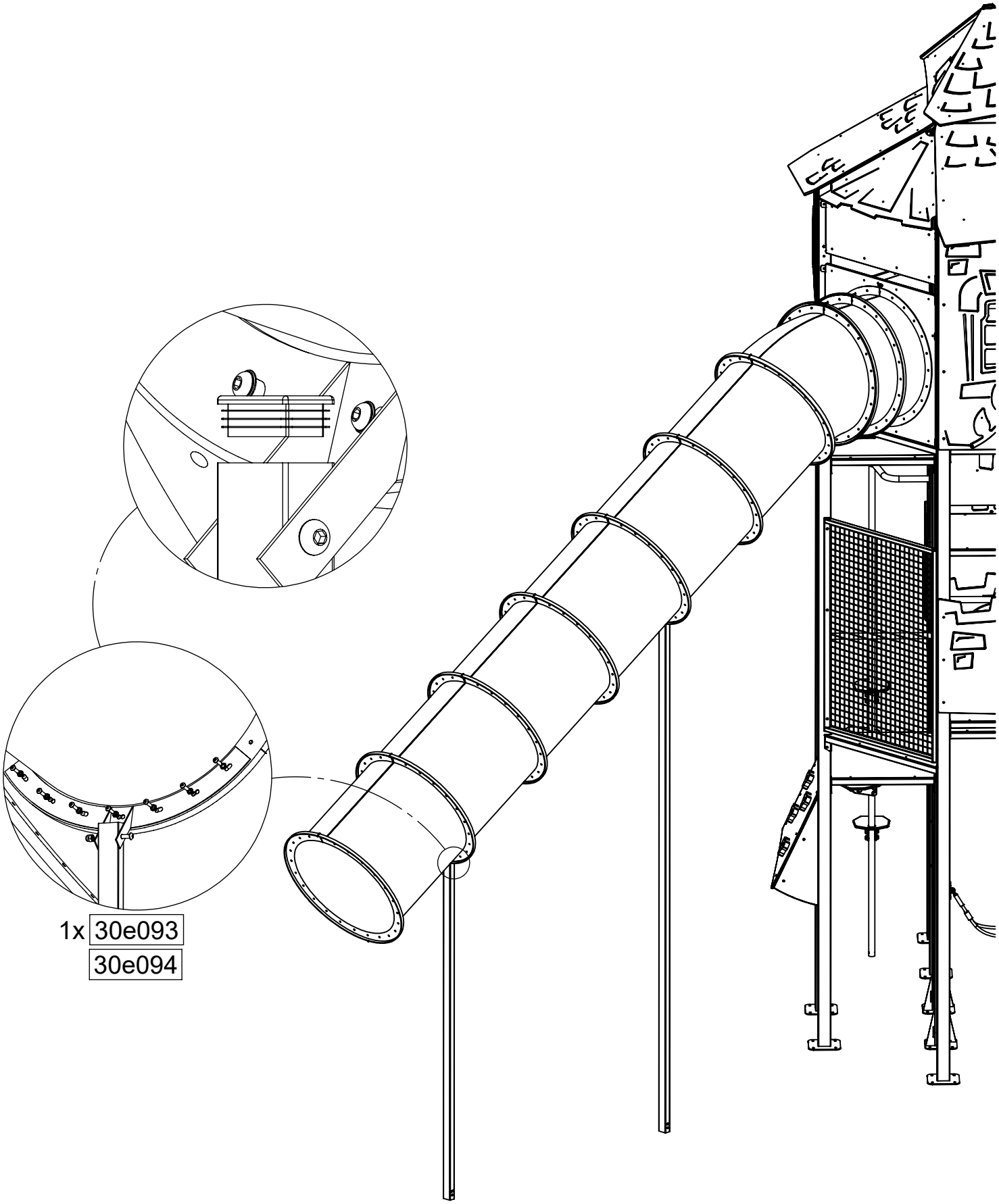

[cm]

vinci play

3060-1.03S2

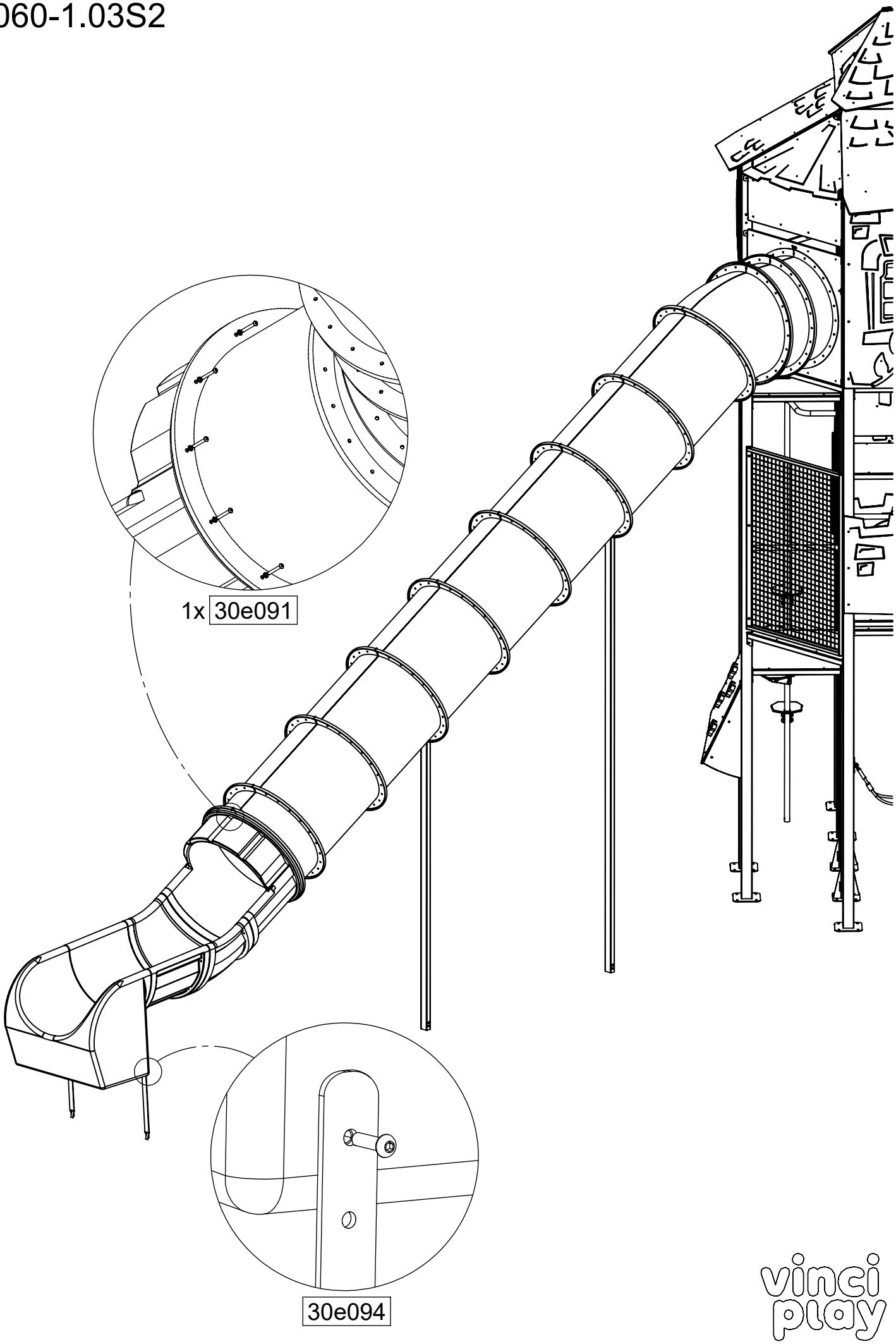

[cm]

vinci play

3060-1.04

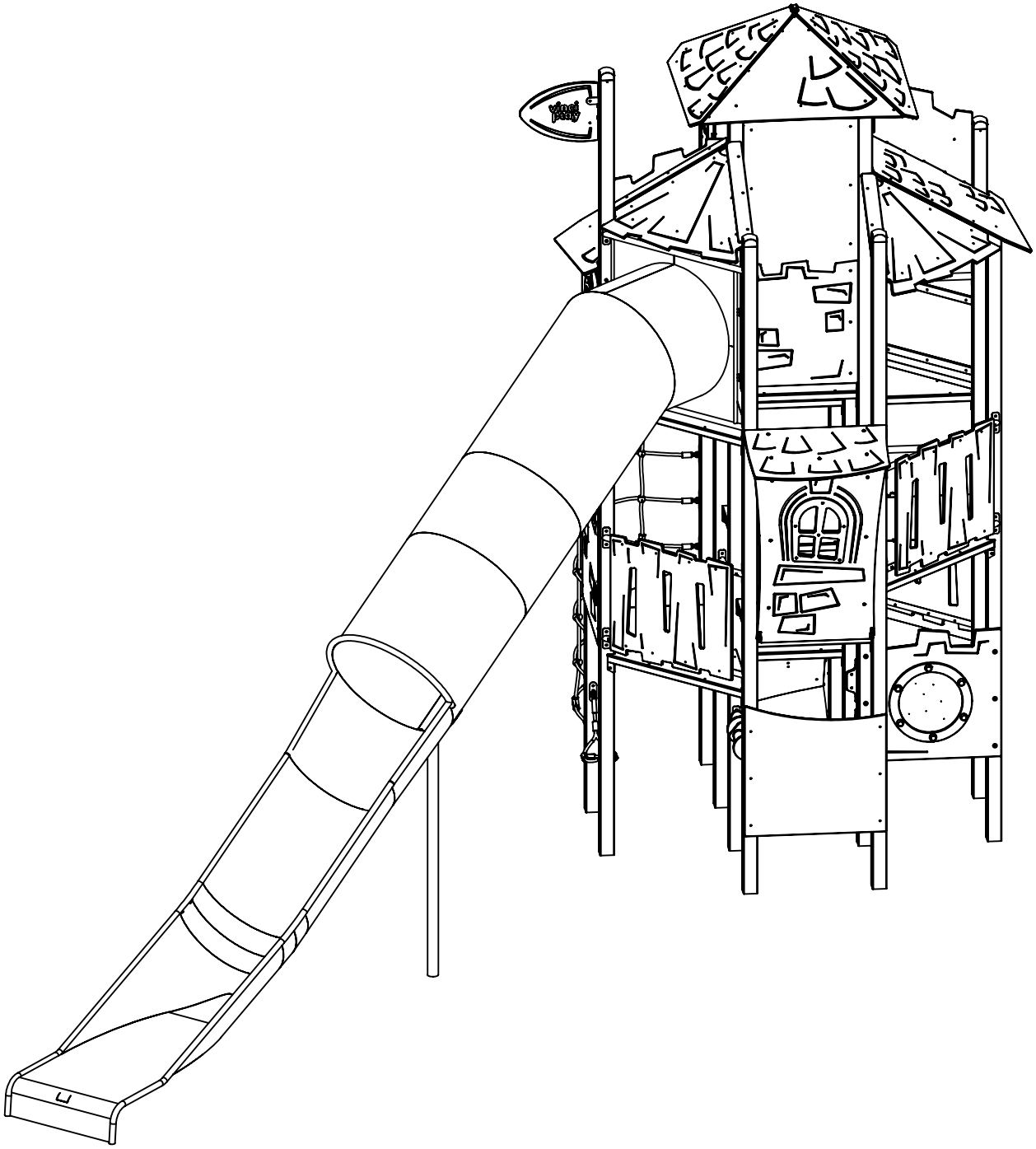

[cm]

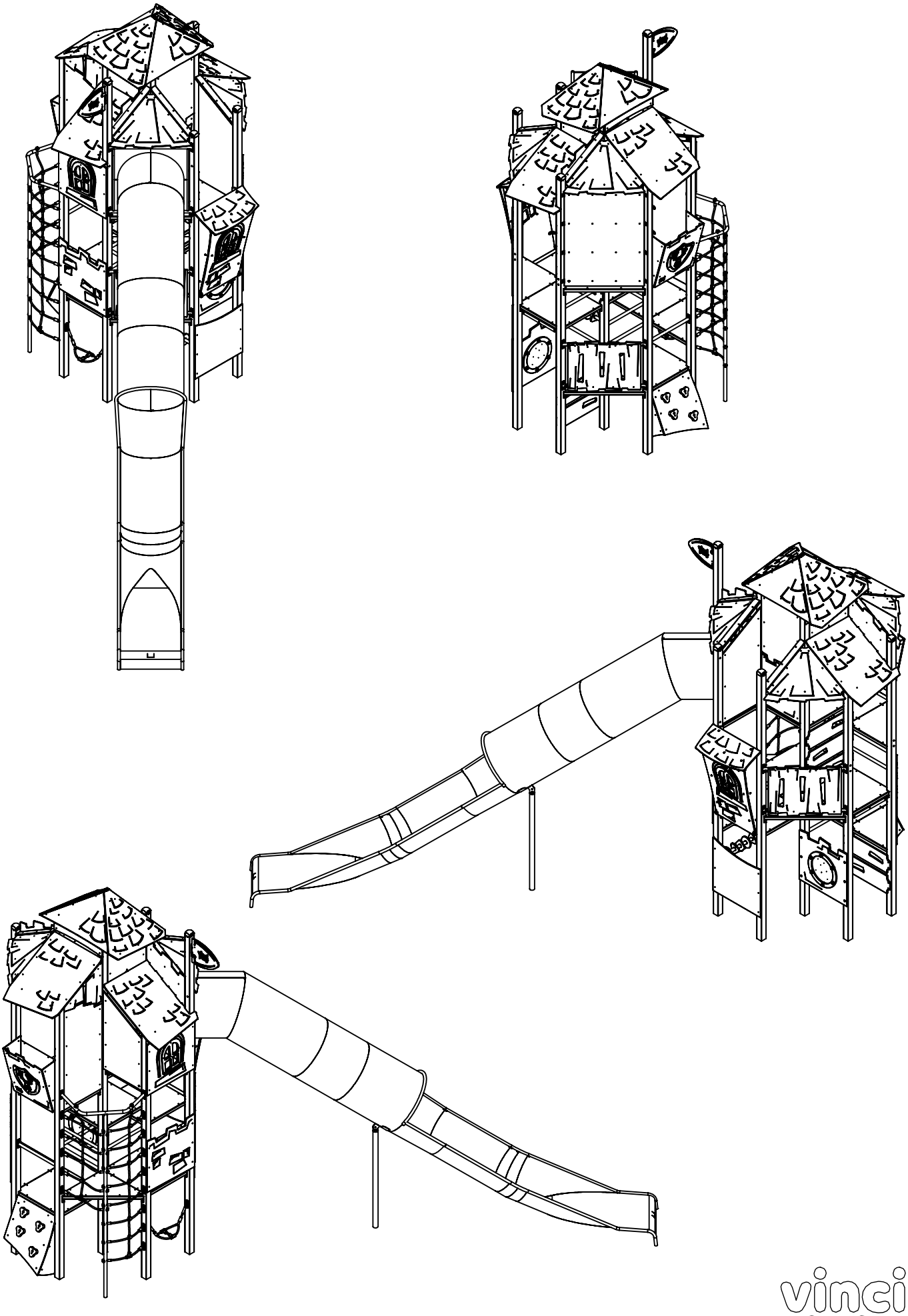

[cm]

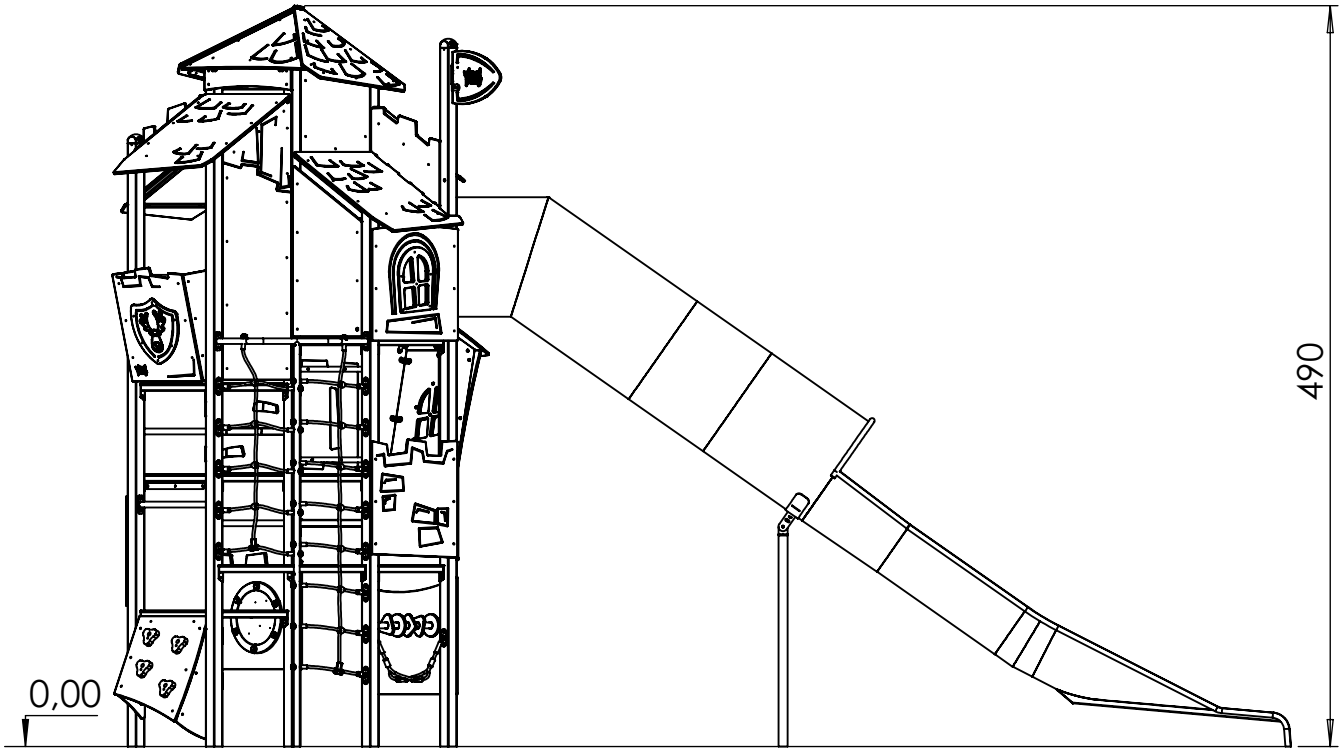

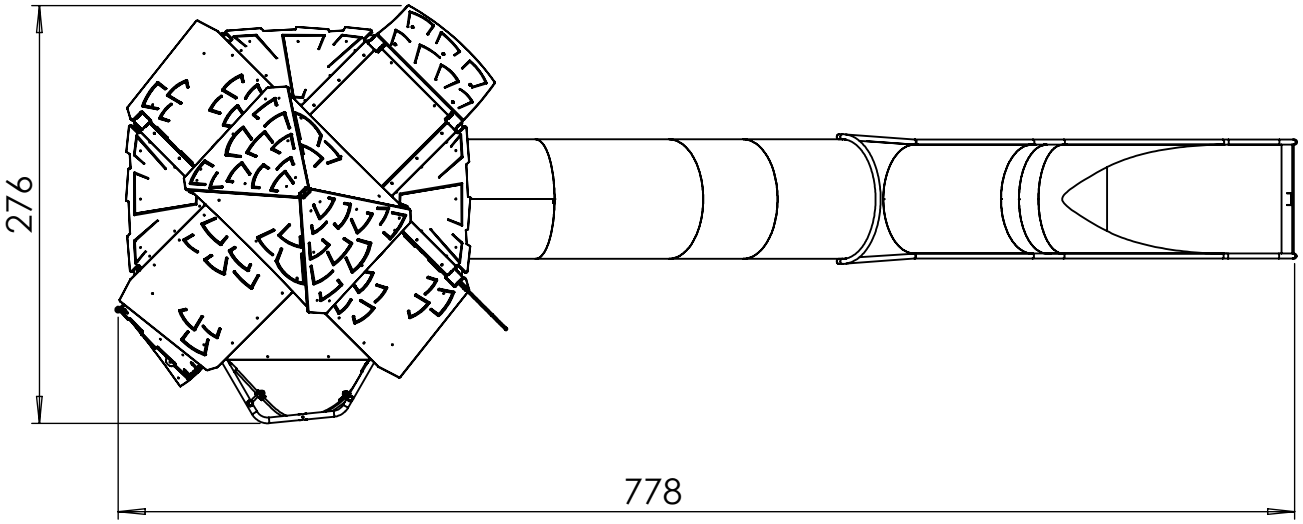

[cm]

vinci play

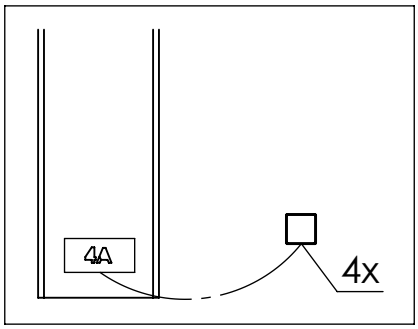
4A
4x

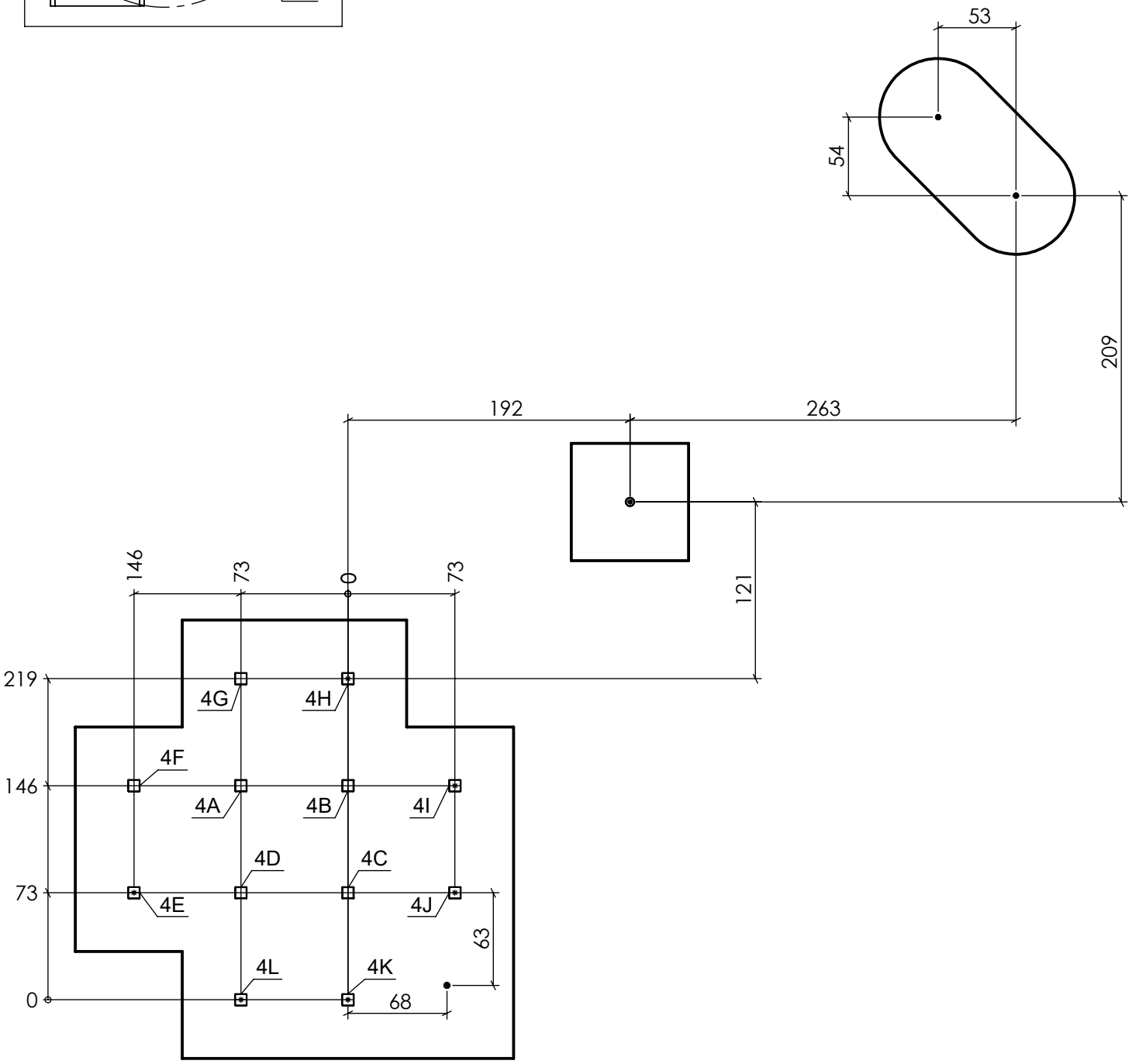
53
54
209
192
263
121
146
73
0
73
219
146
73
0
4G
4H
4F
4A
4B
4I
4D
4C
4E
4J
4L
4K
63
68

[cm]

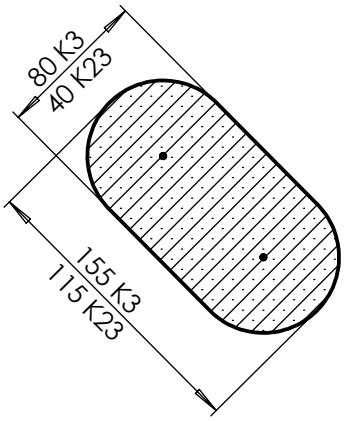
80 K3
40 K23
155 K3
115 K23

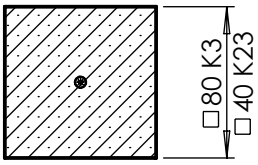
□80 K3
□40 K23

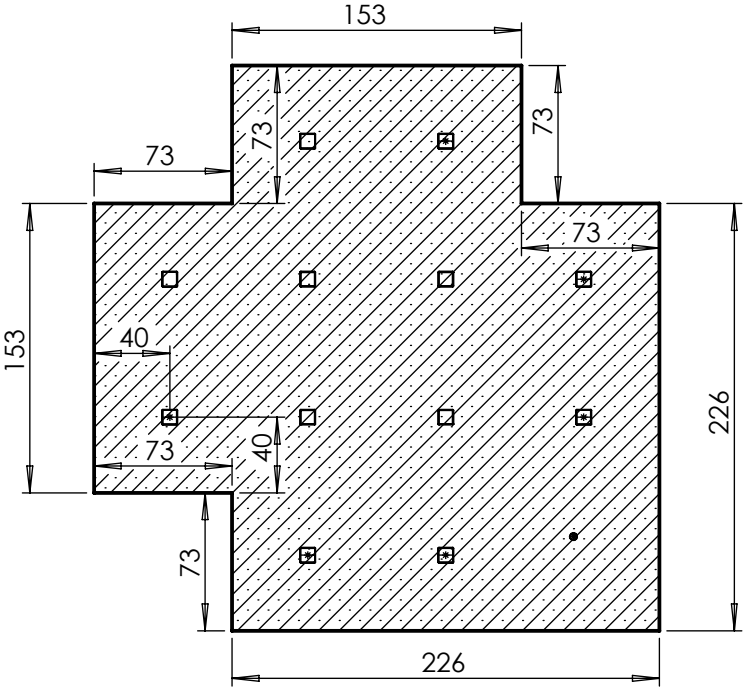
153
73
73
73
73
153
40
73
40
226
73
226

[cm]

3060-1.04S2

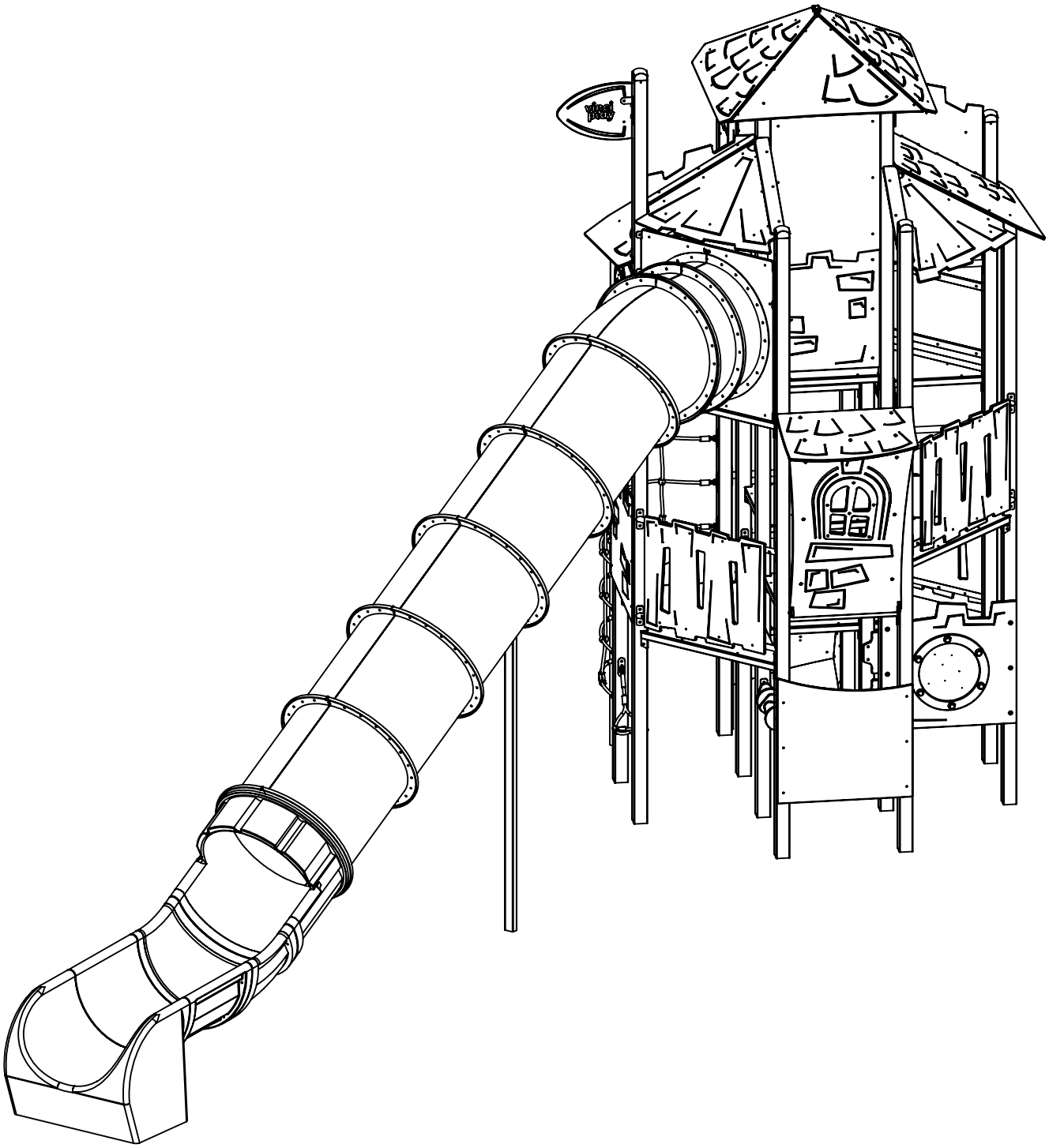

[cm]

3060-1.04S2

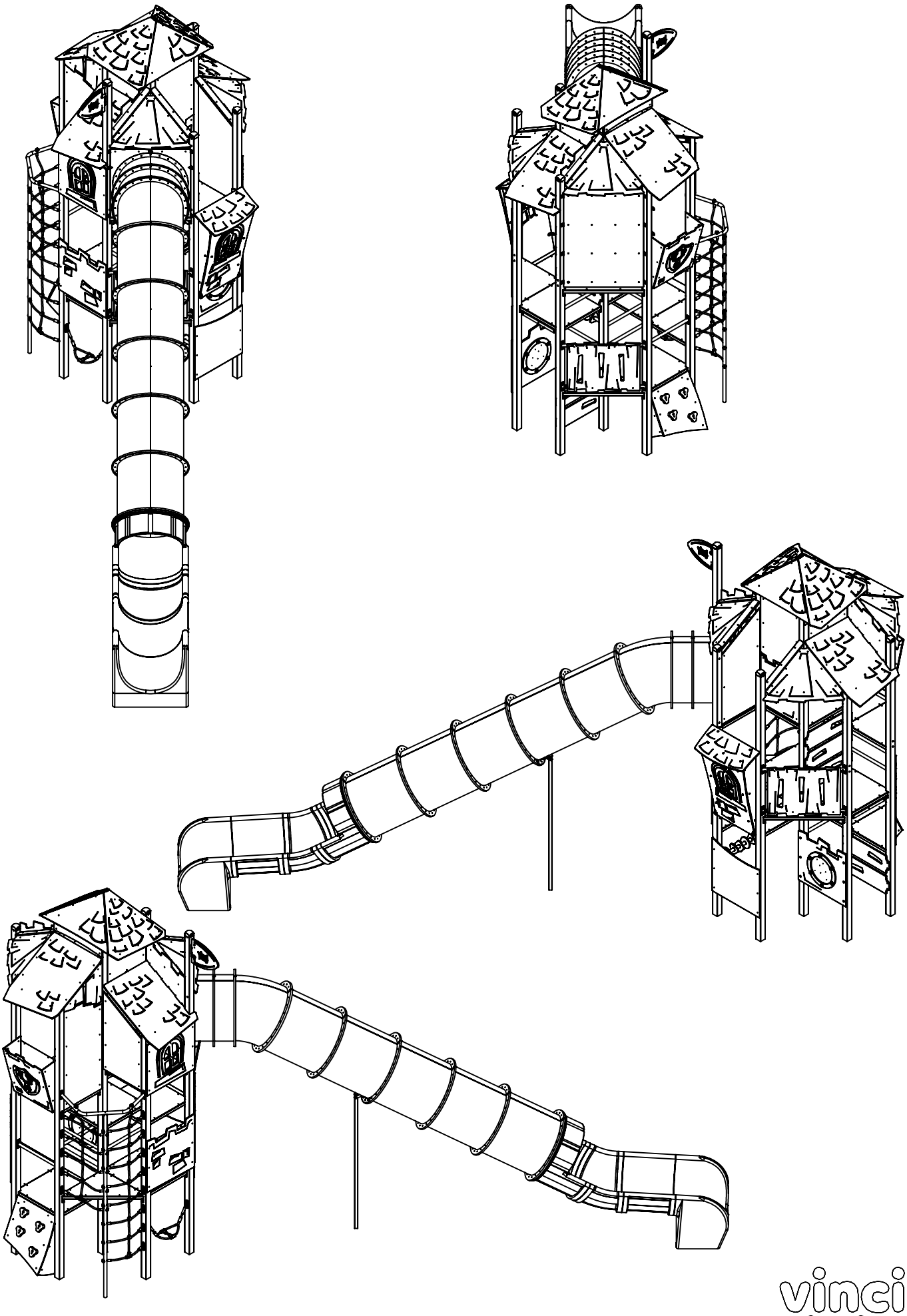

[cm]

3060-1.04S2

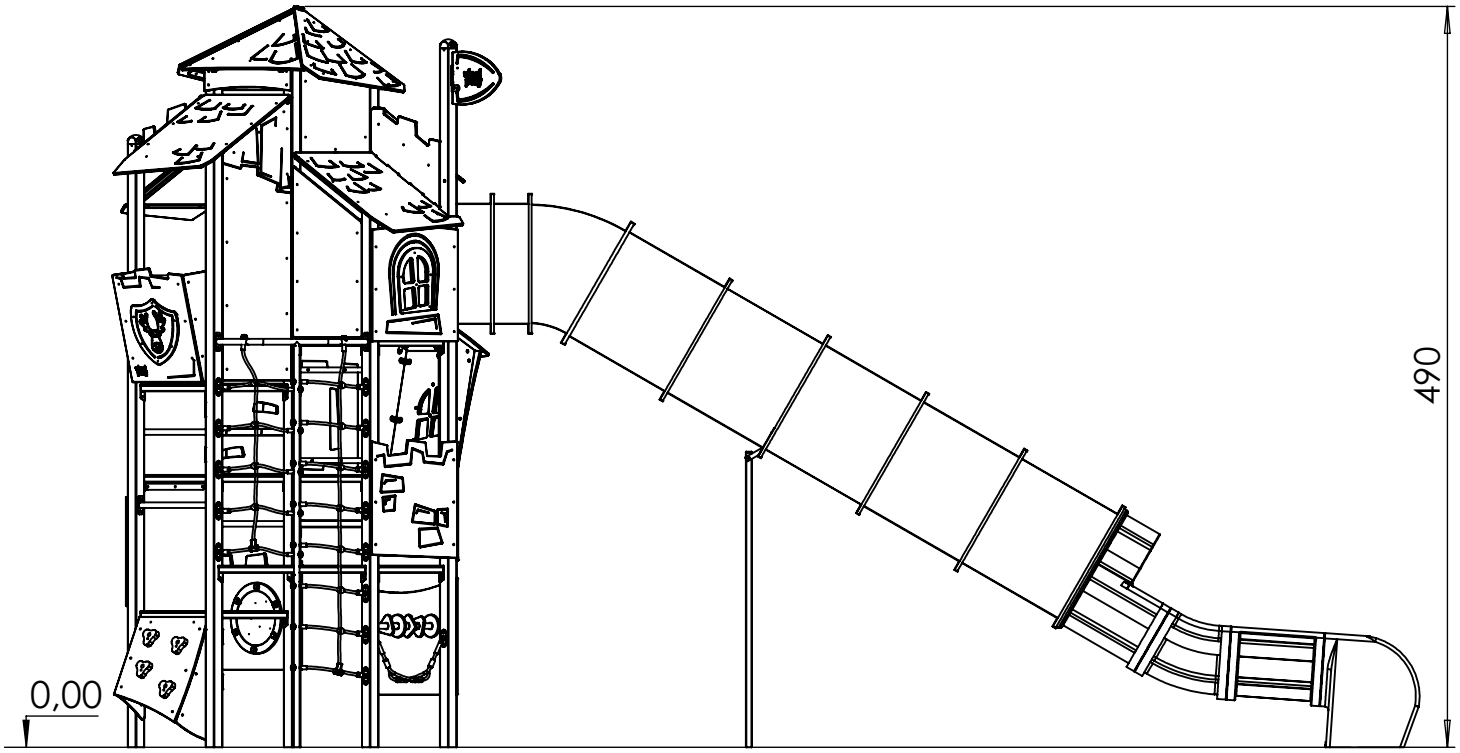

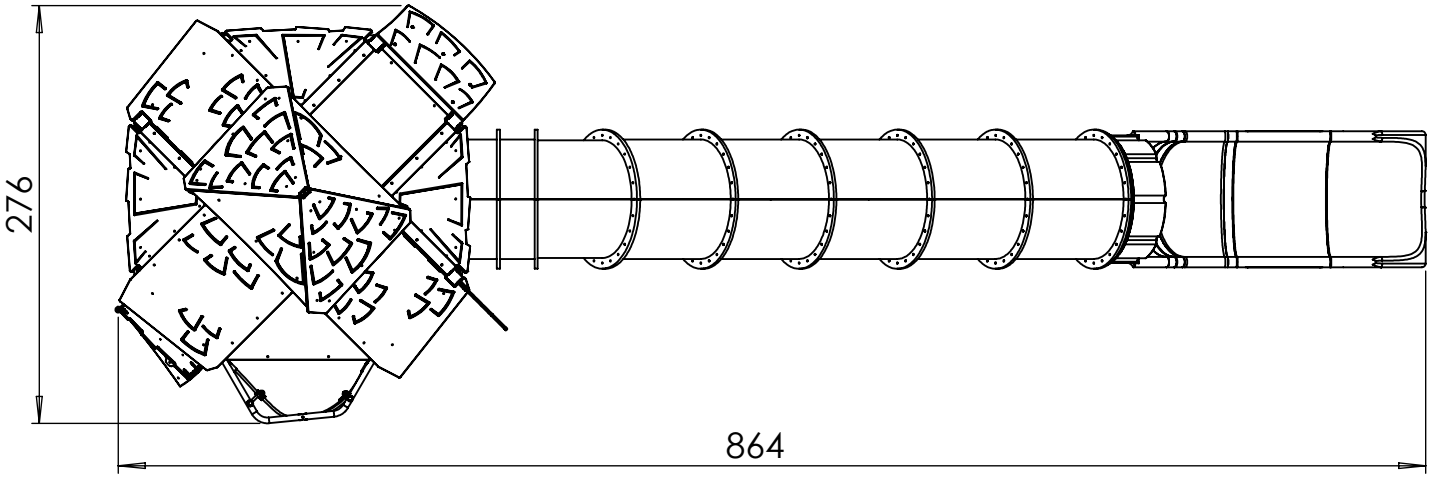

[cm]

3060-1.04S2

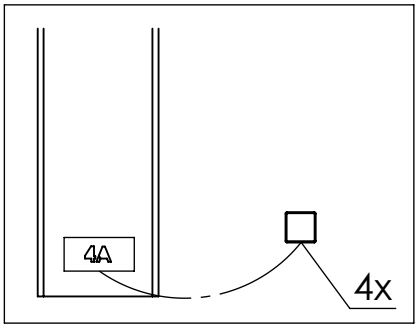

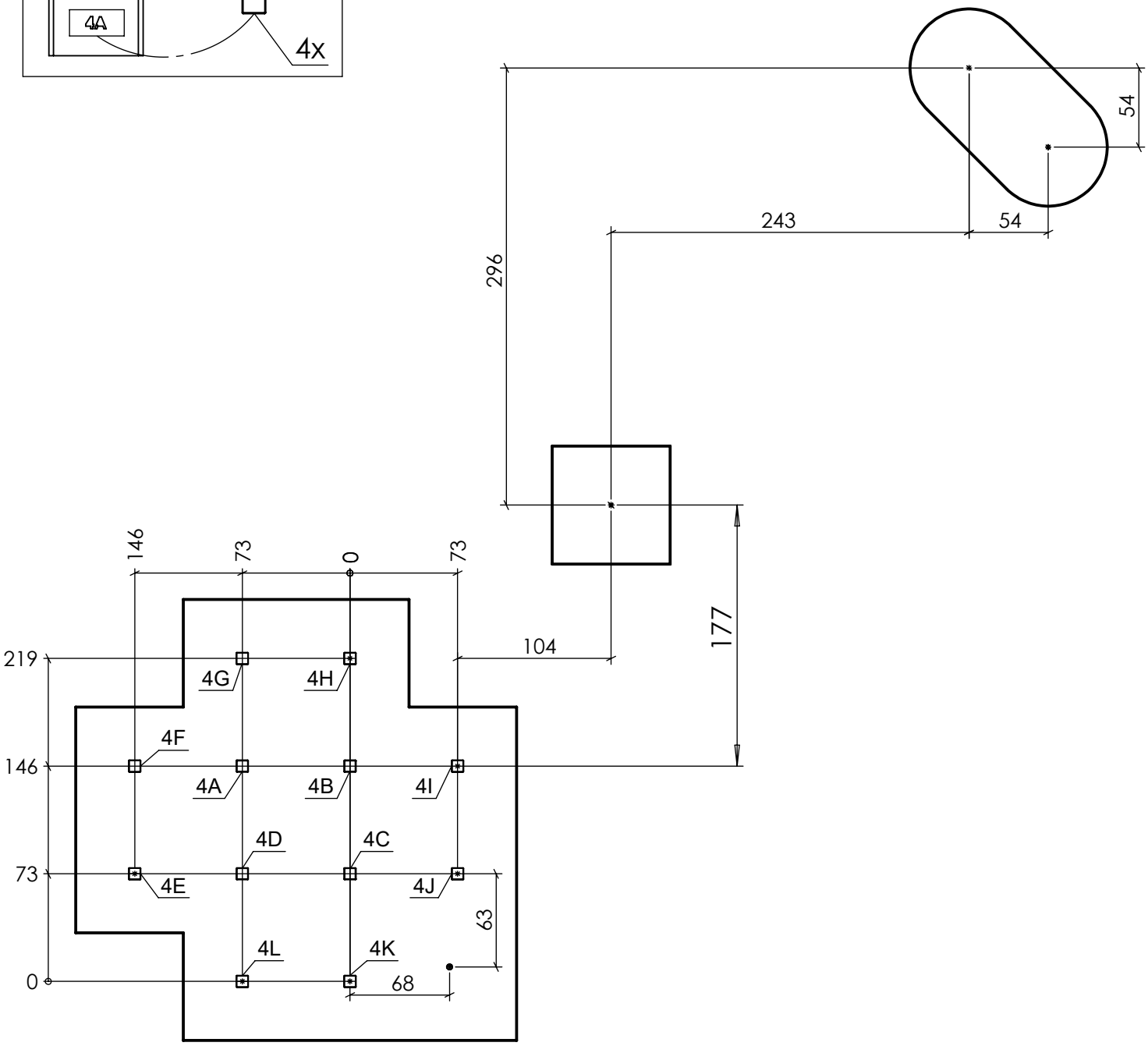

[cm]

3060-1.04S2

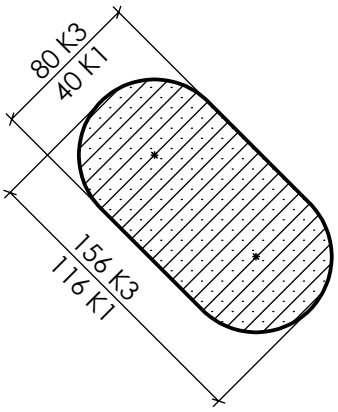

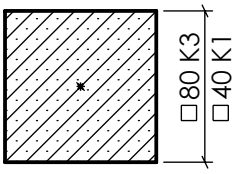

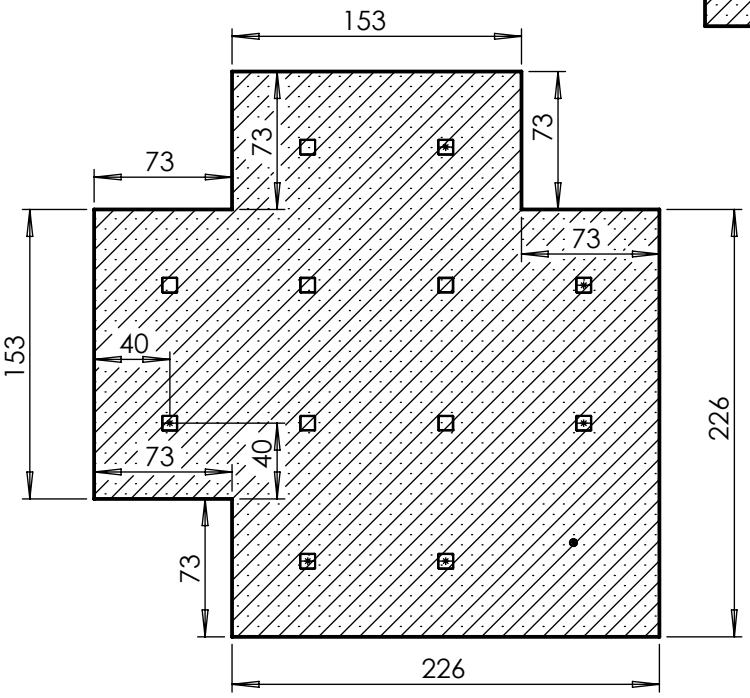

[cm]

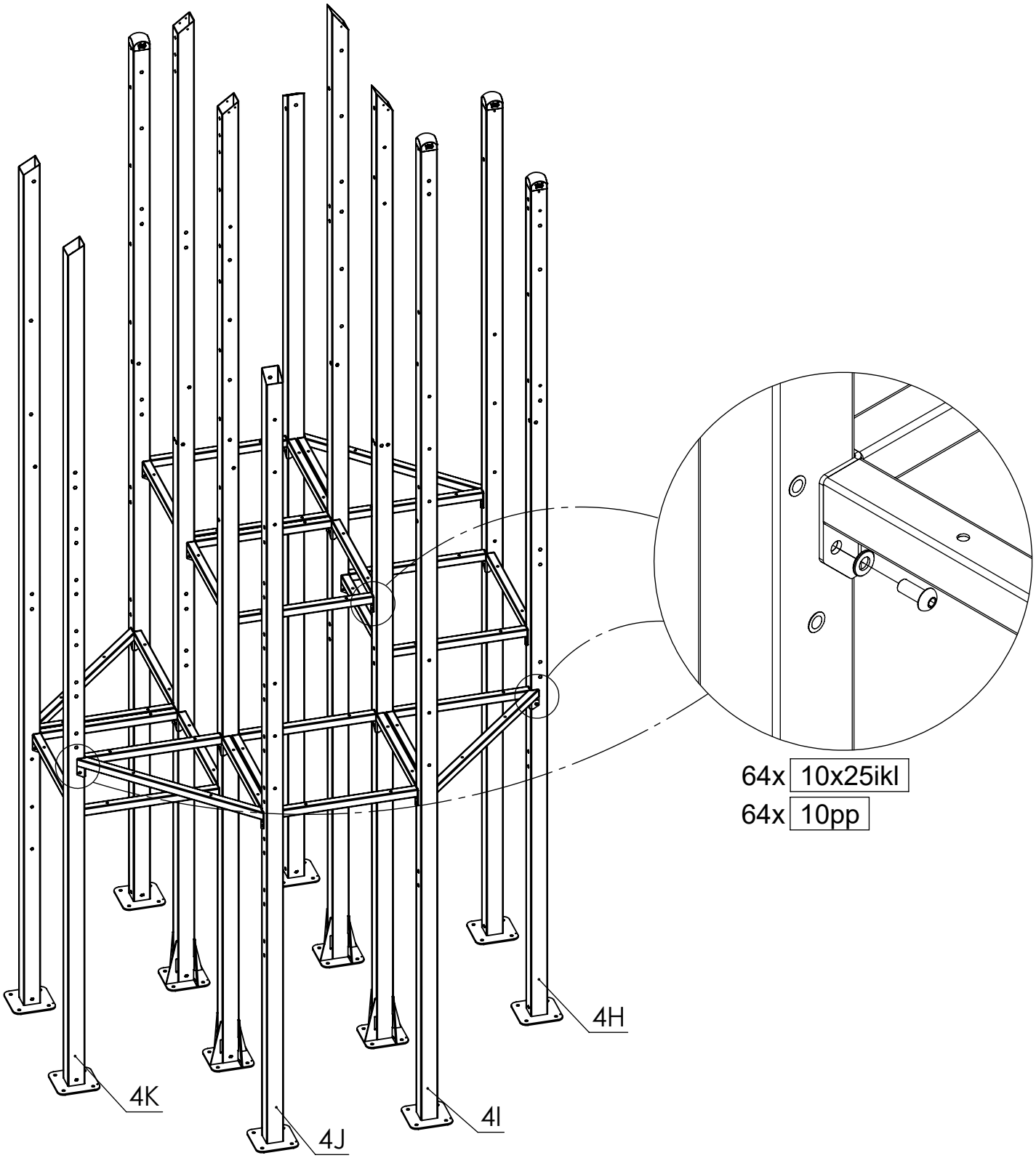

[cm]

vinci play

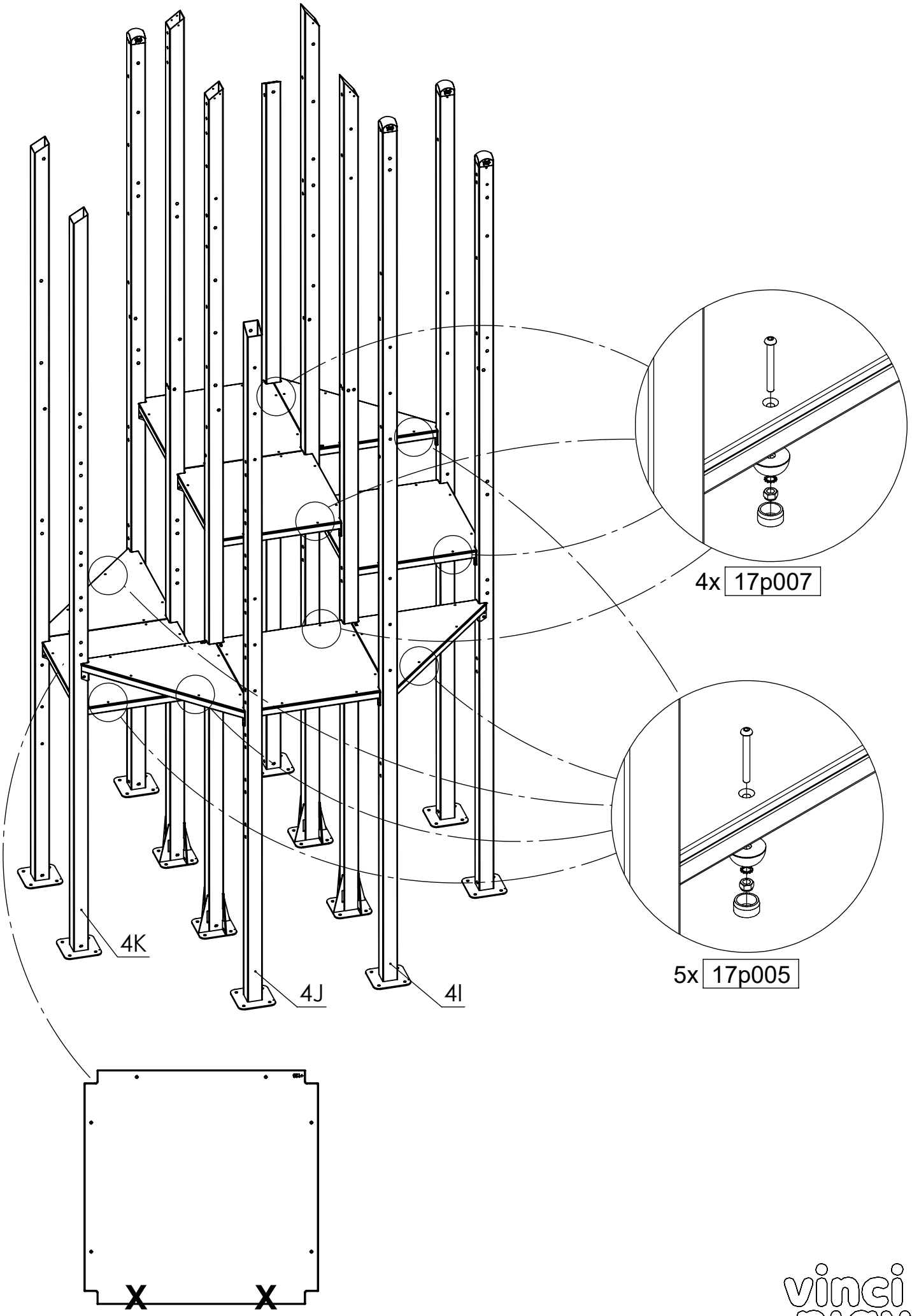
4x 17p007
5x 17p005
4K
4J
4I
X
X
[cm]

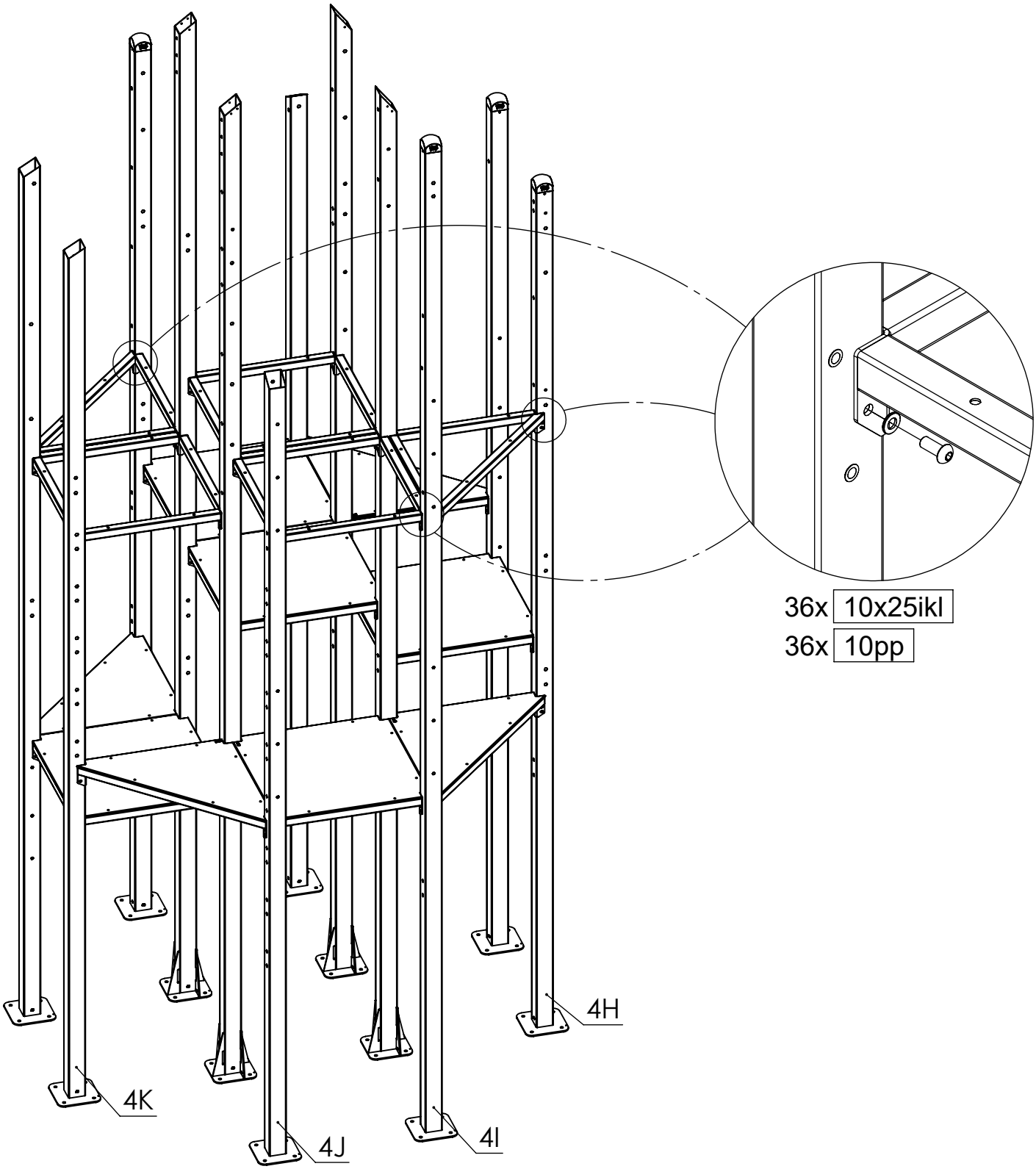

[cm]

vinci play

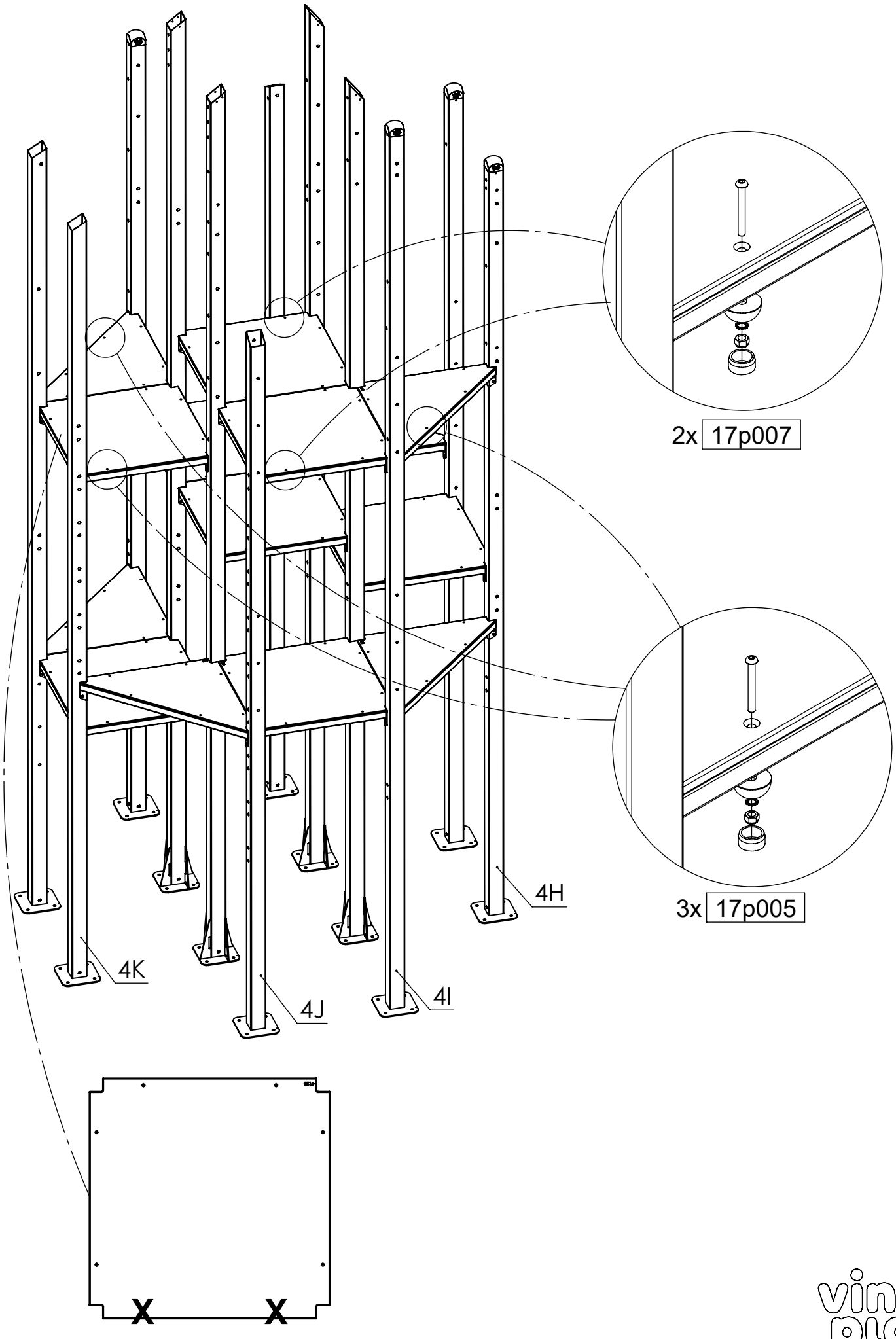
2x 17p007
3x 17p005
4H
4K
4J
4I
X
X
[cm]

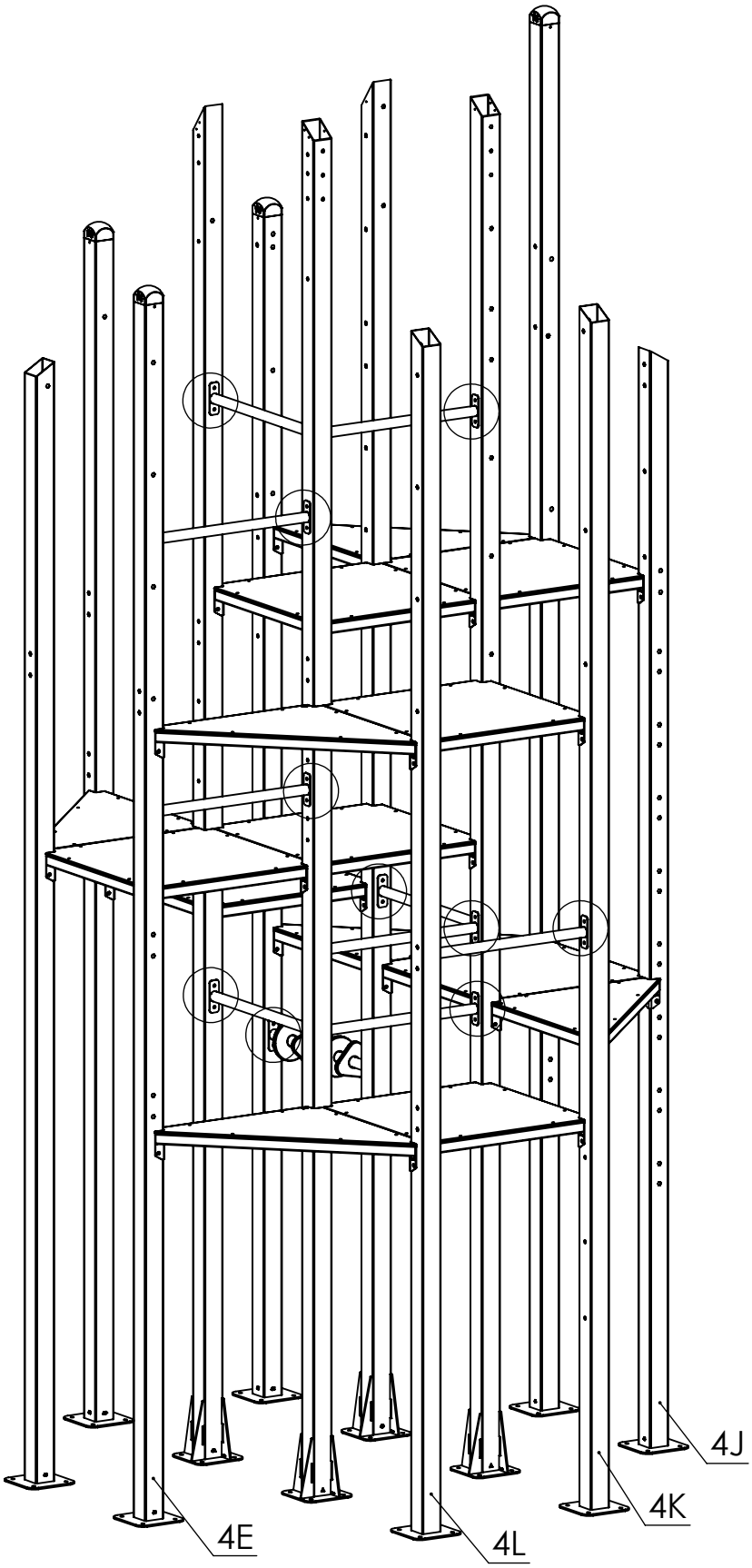

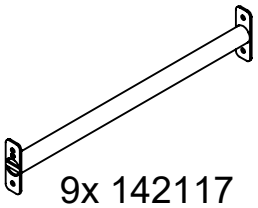

9x 142117

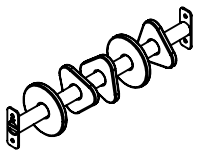

1x 304104

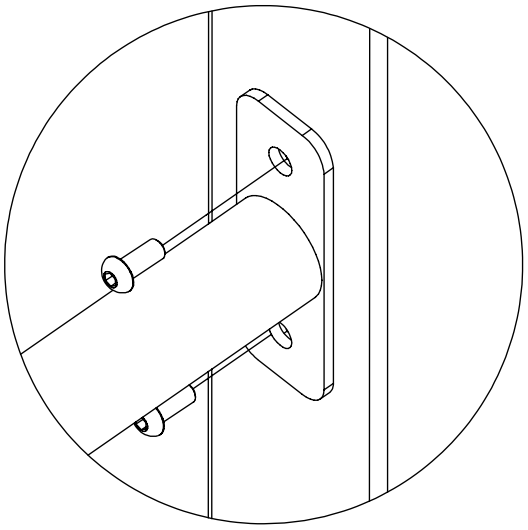

40x 10x25ikl

[cm]

vinci play

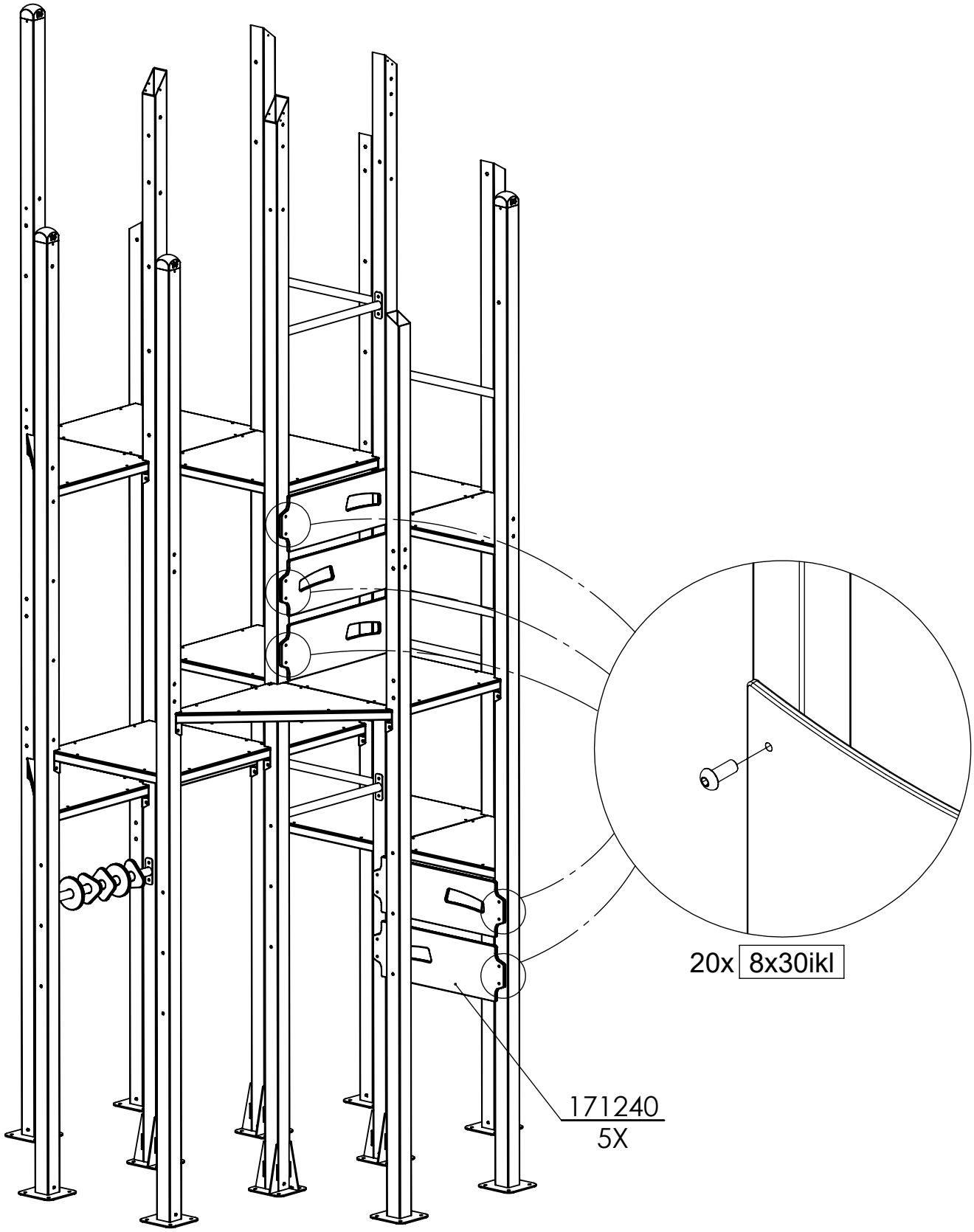

[cm]

vinci play

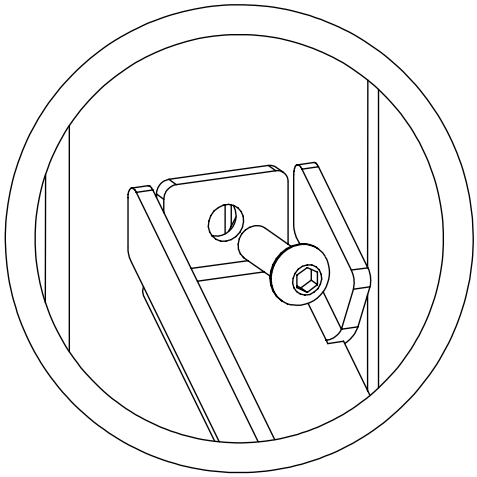

10x 8x25ikl

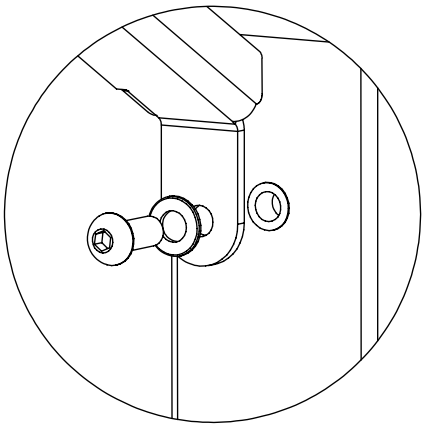

16x 10x25ikl
16x 10pp

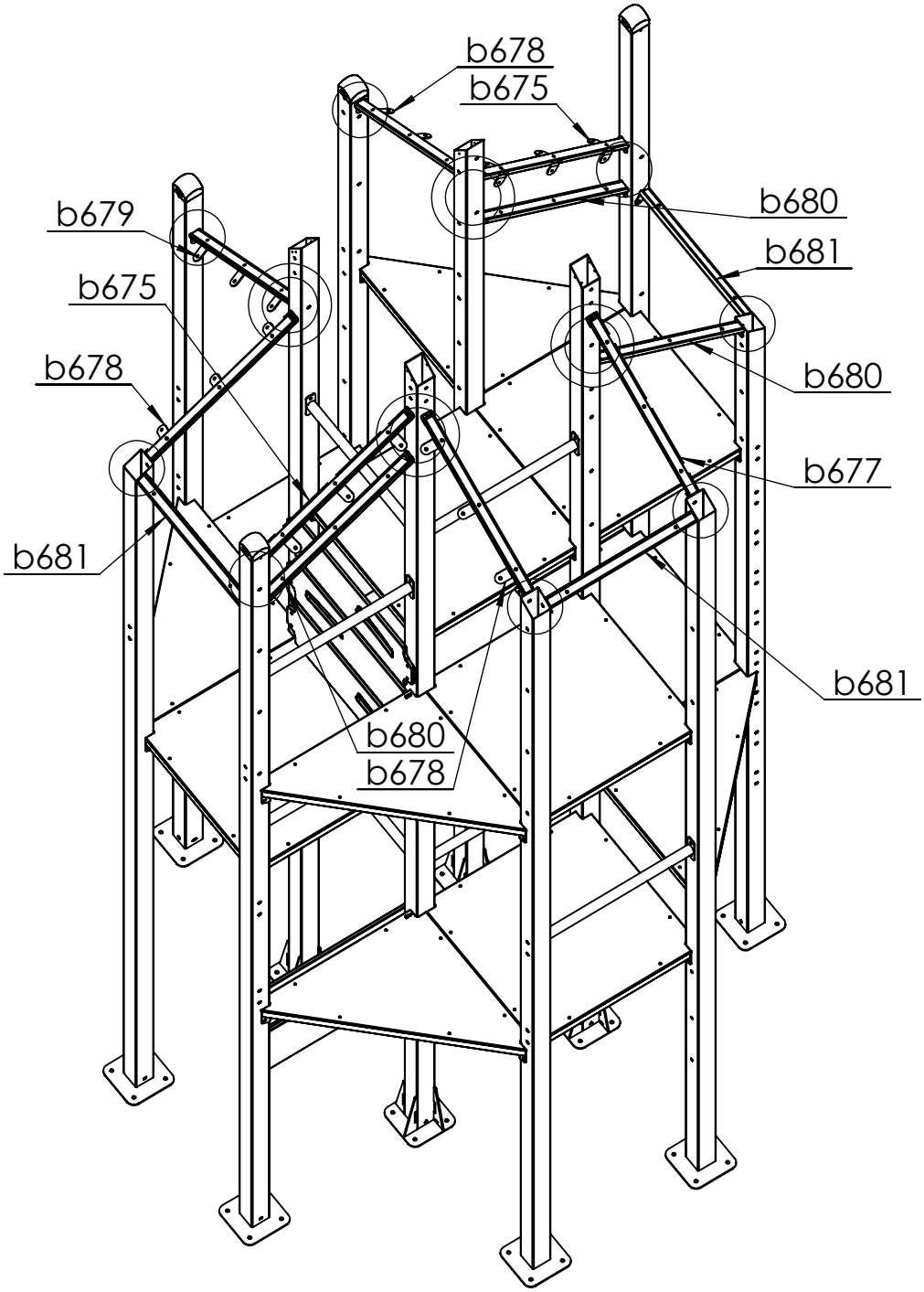

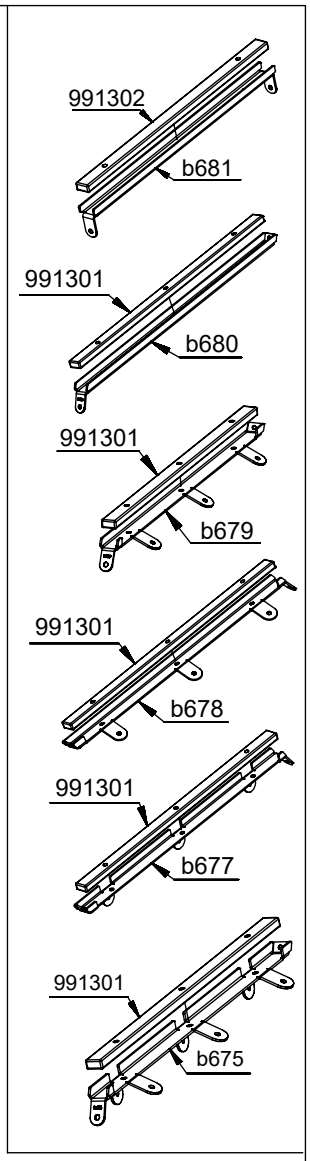

[cm]

vinci play

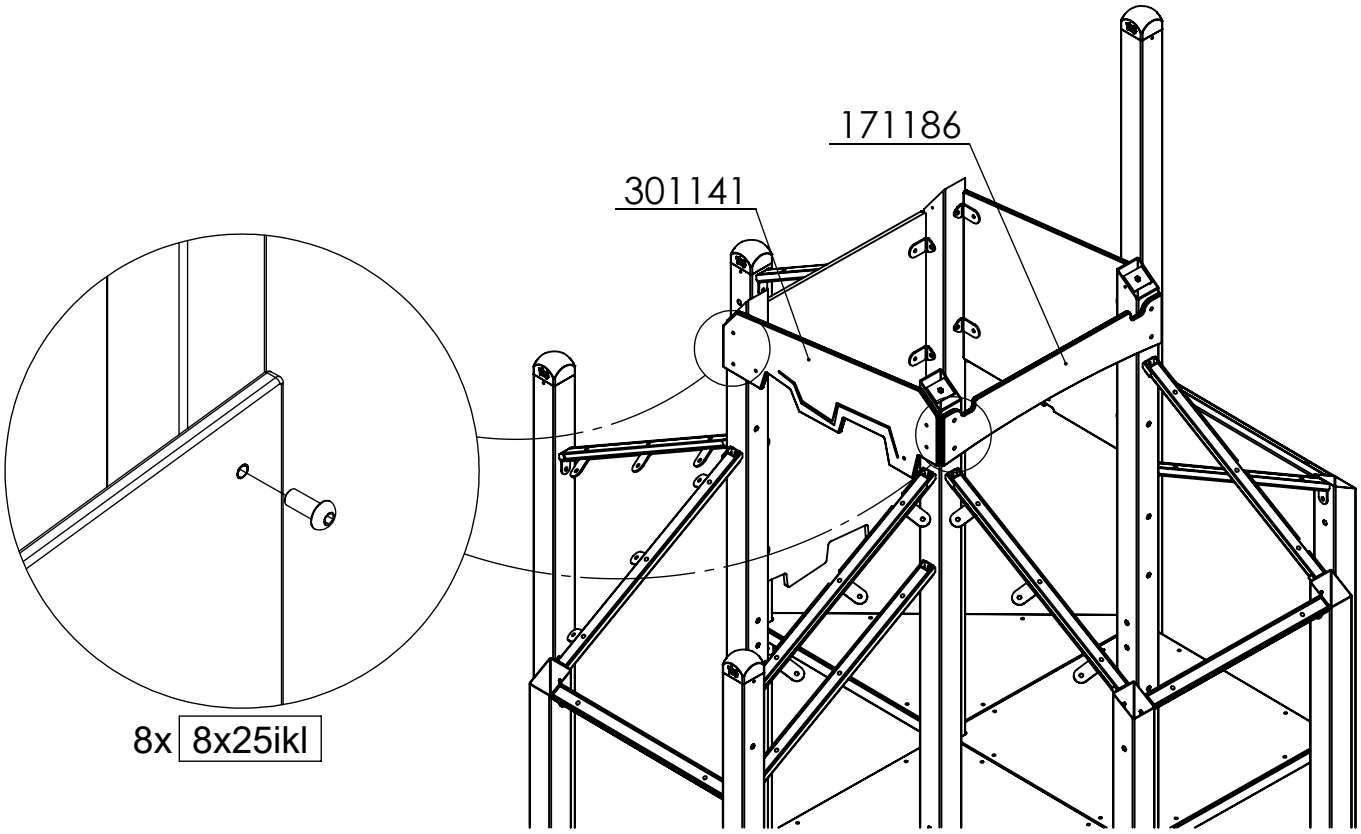
171186
301141
8x 8x25ikl

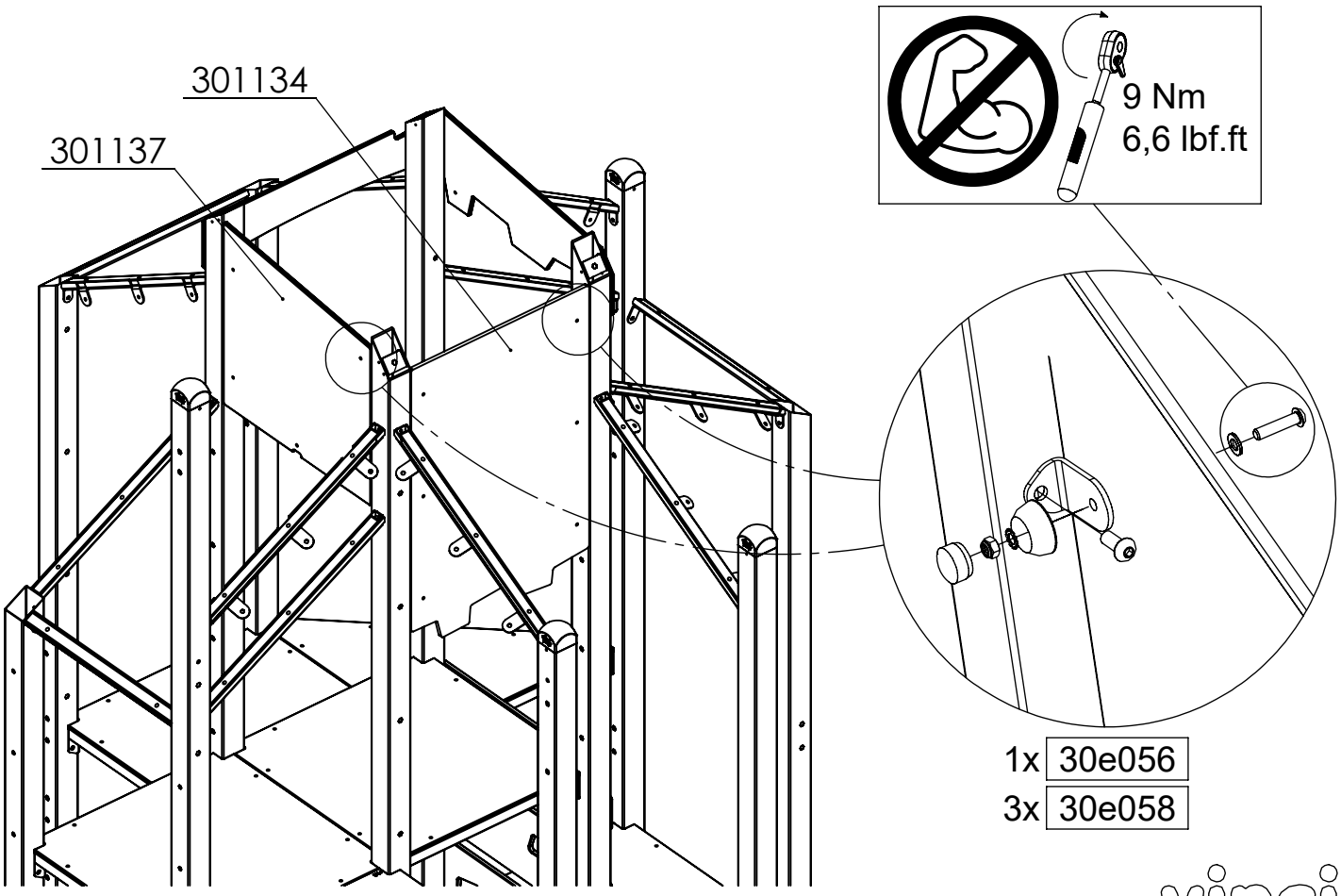
301134
301137
9 Nm
6,6 lbf.ft
1x 30e056
3x 30e058

[cm]

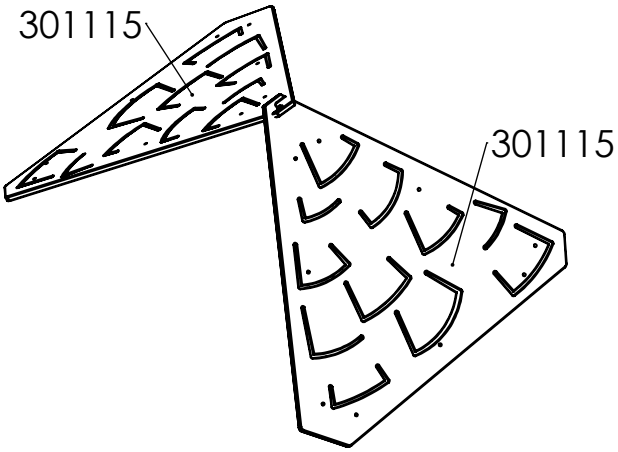

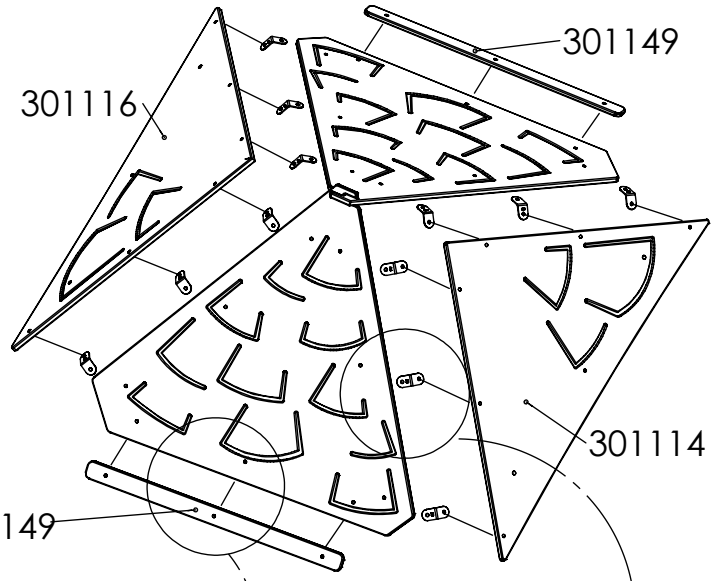

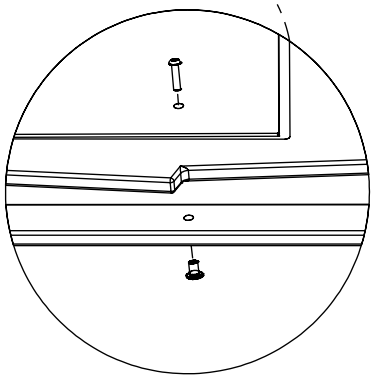

2x 30c152

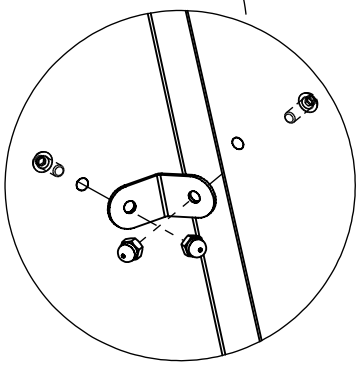

1x 30c058

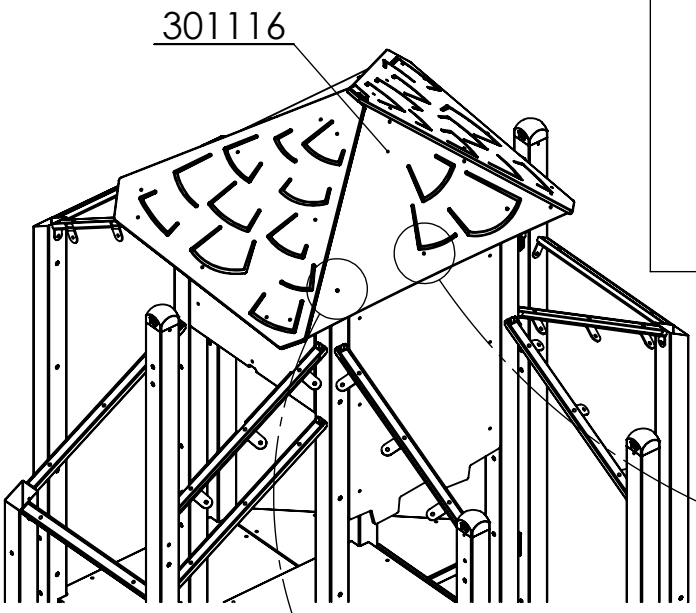

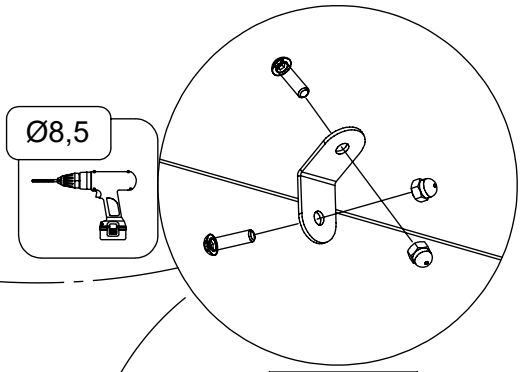

1x 30c154

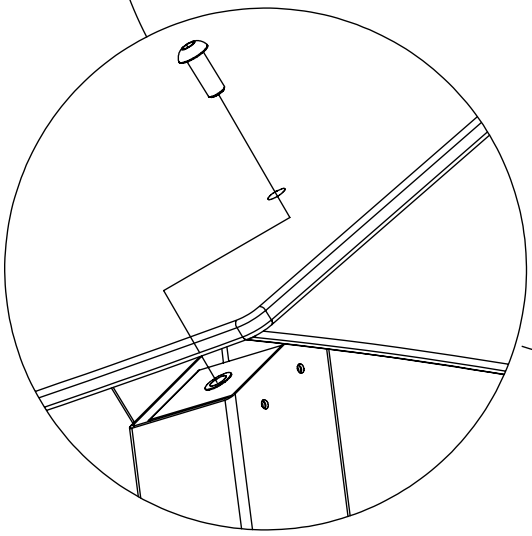

4x 10x30ikl

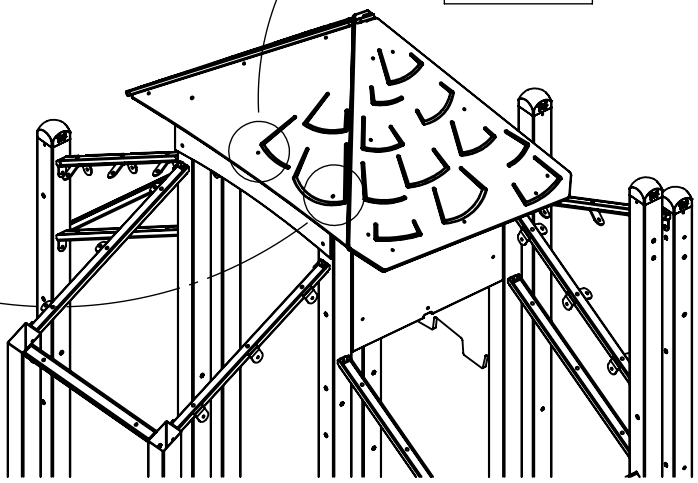

[cm]

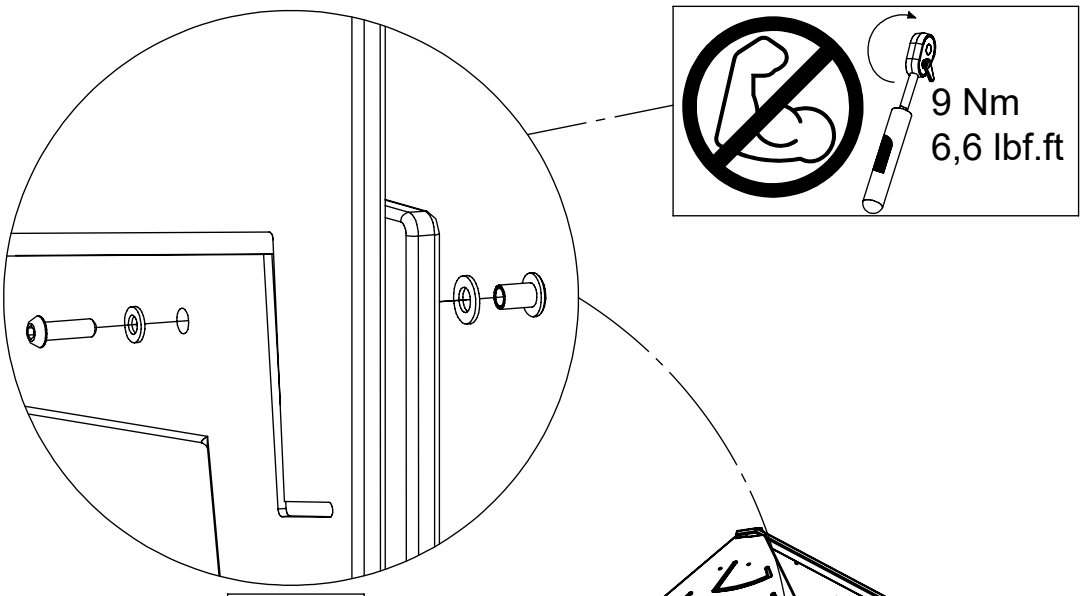

1x 30c108

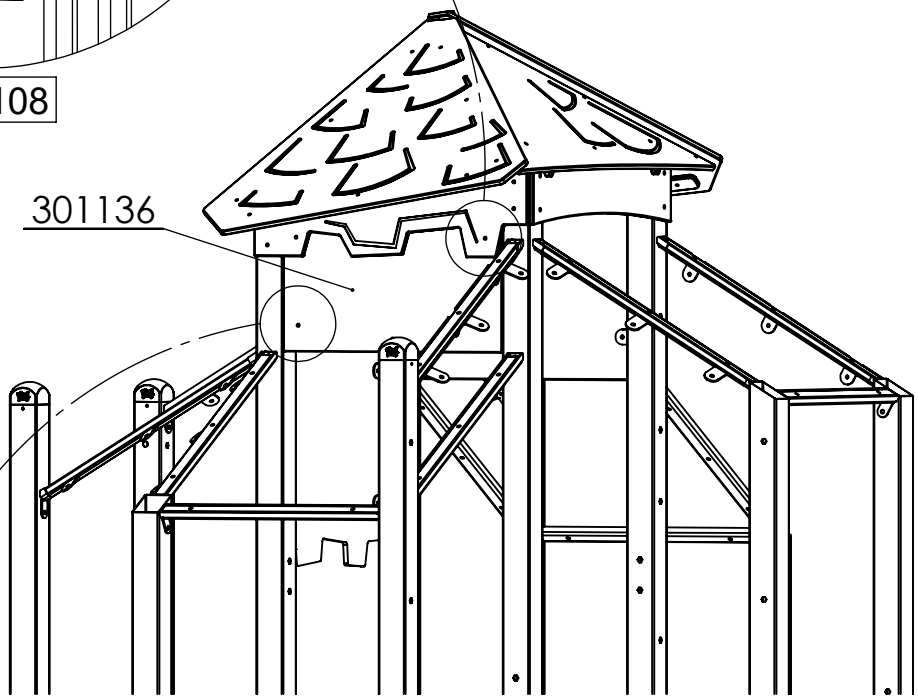

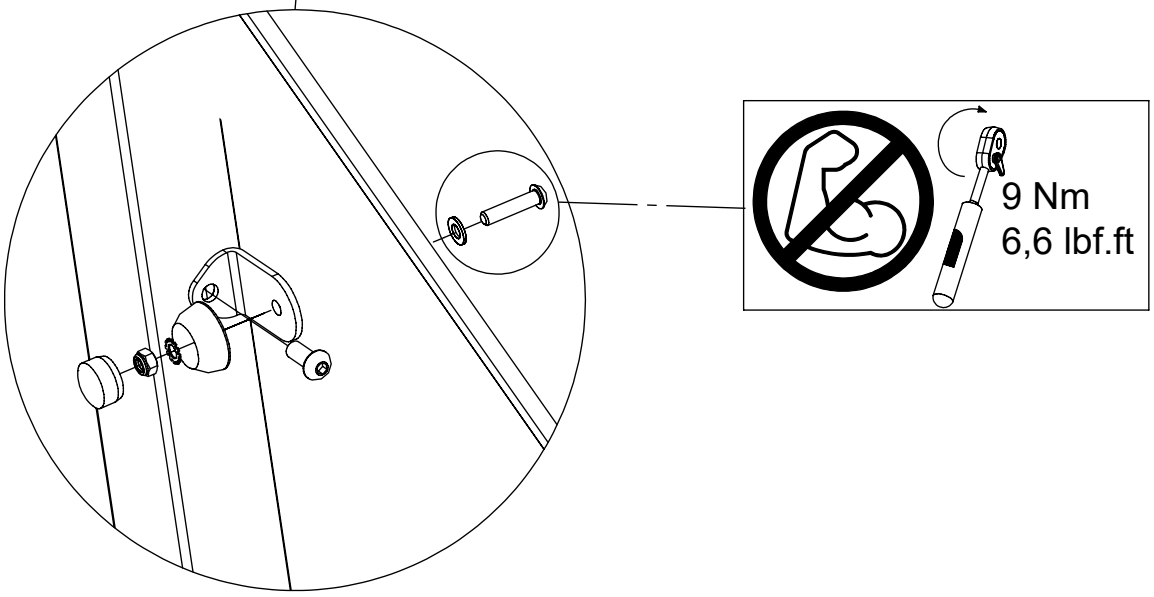

1x 30e058

[cm]

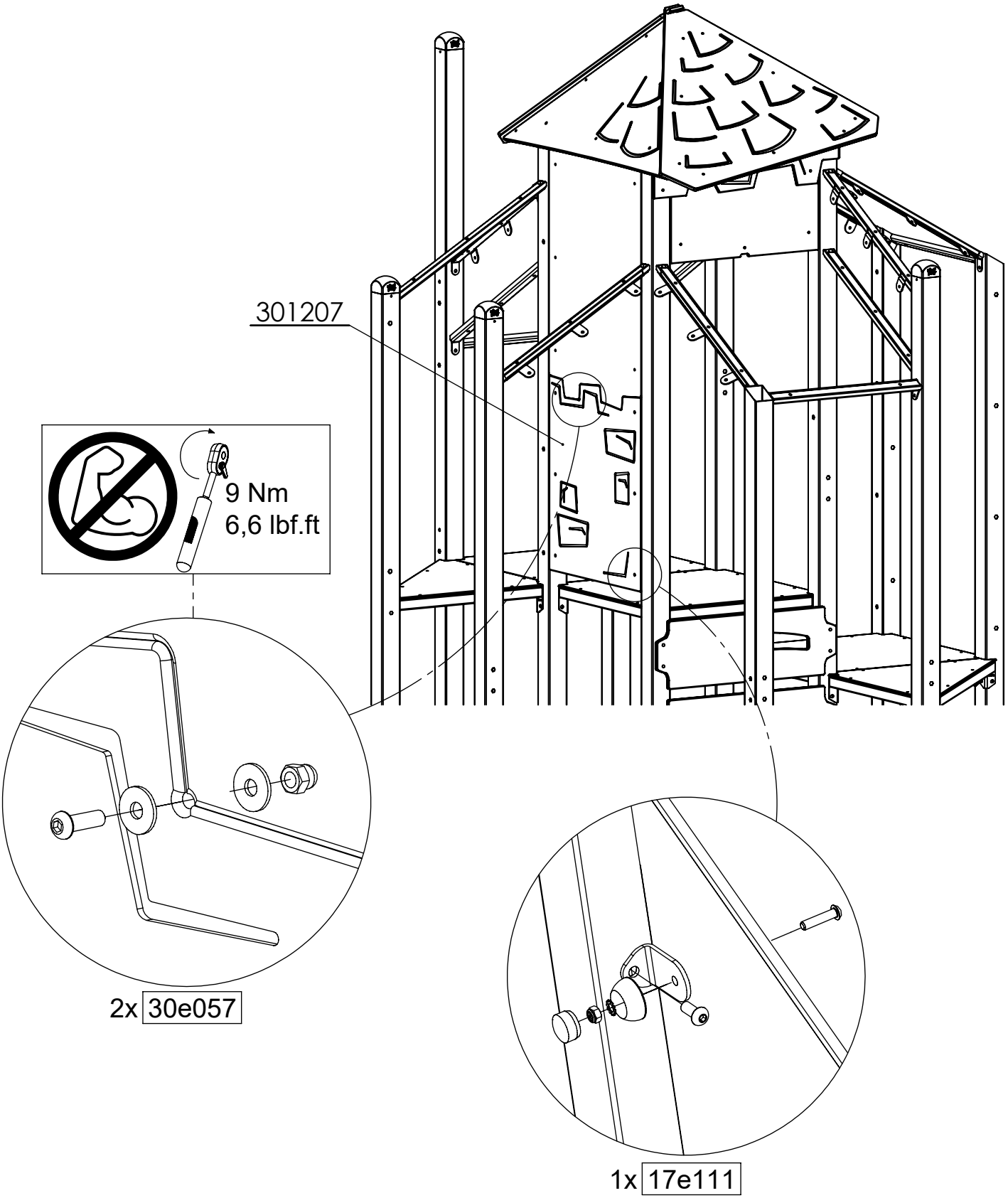

[cm]

vinci play

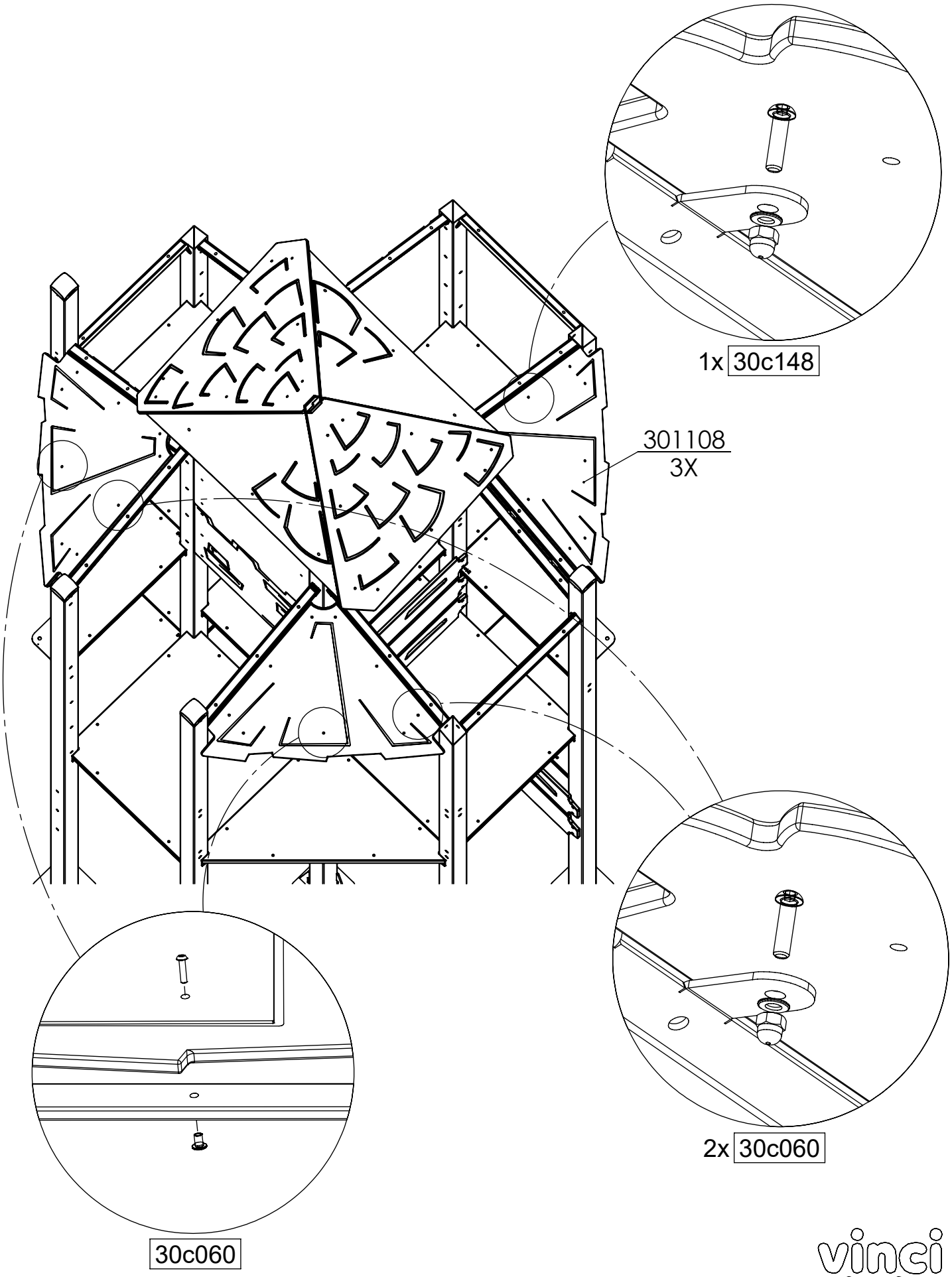
1x 30c148
301108
3X
2x 30c060
30c060
[cm]

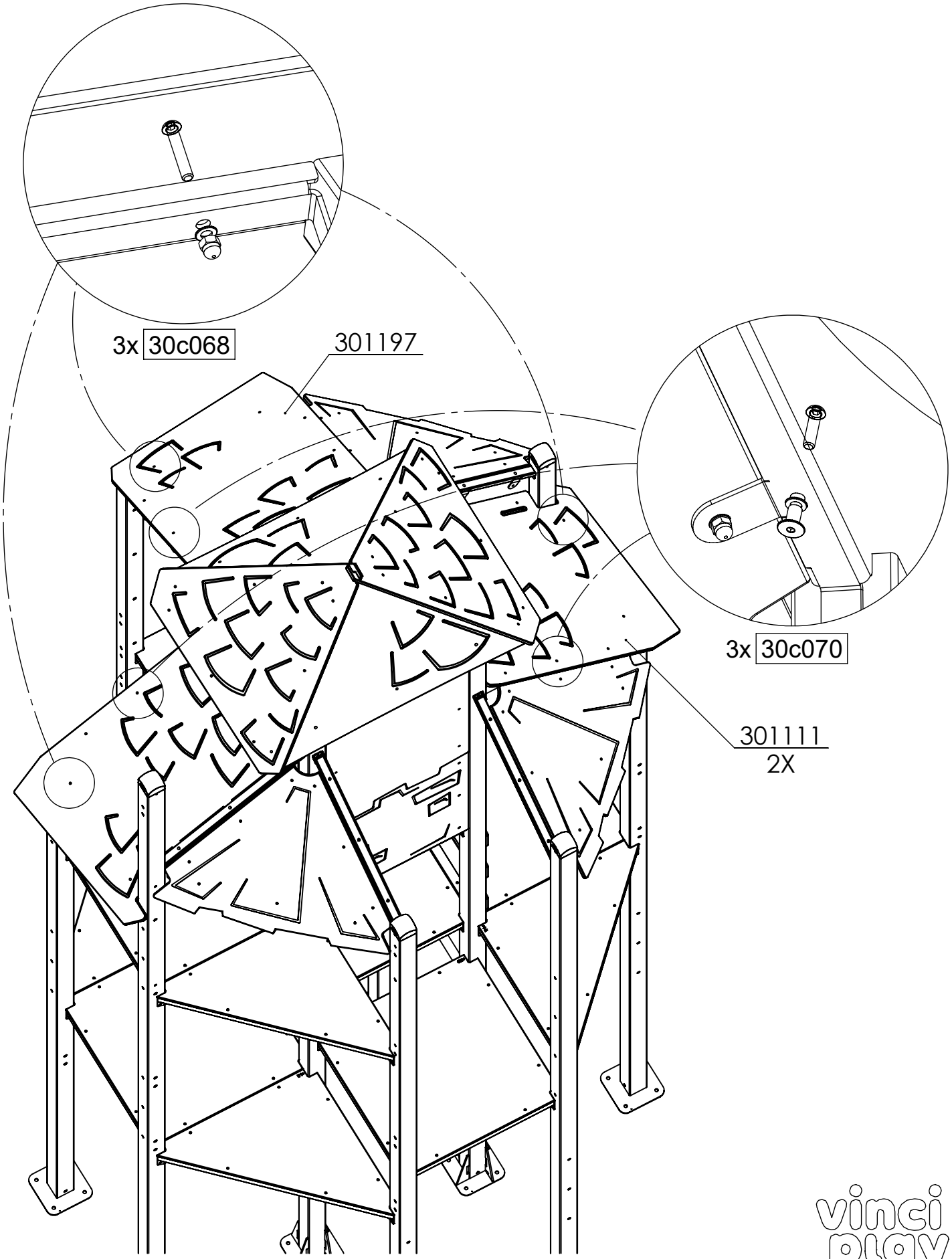

[cm]

vinci play

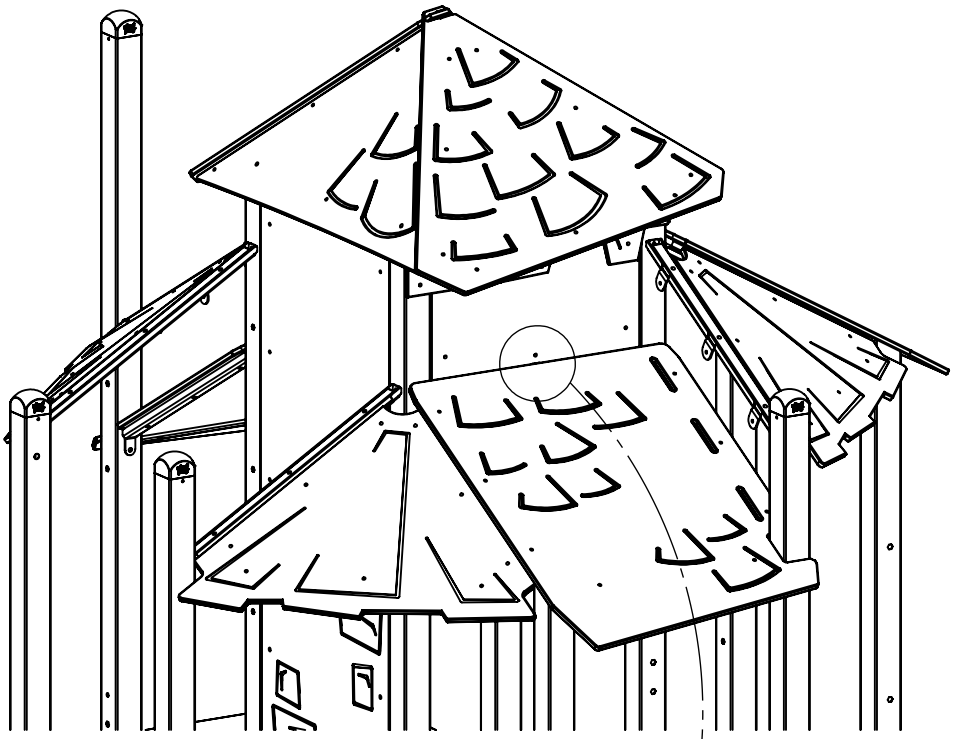

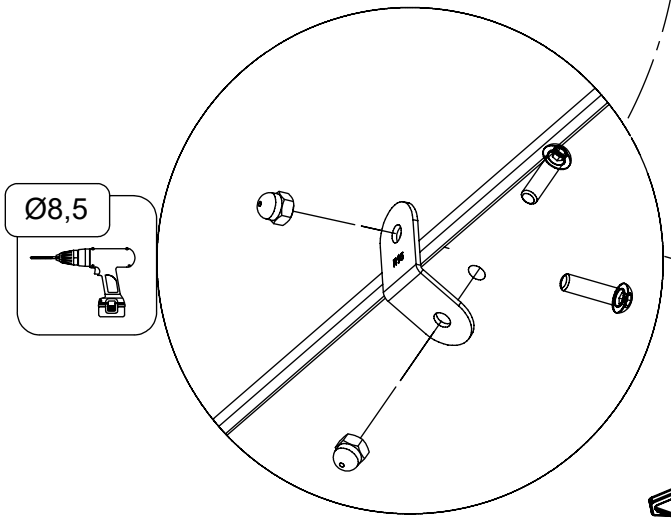

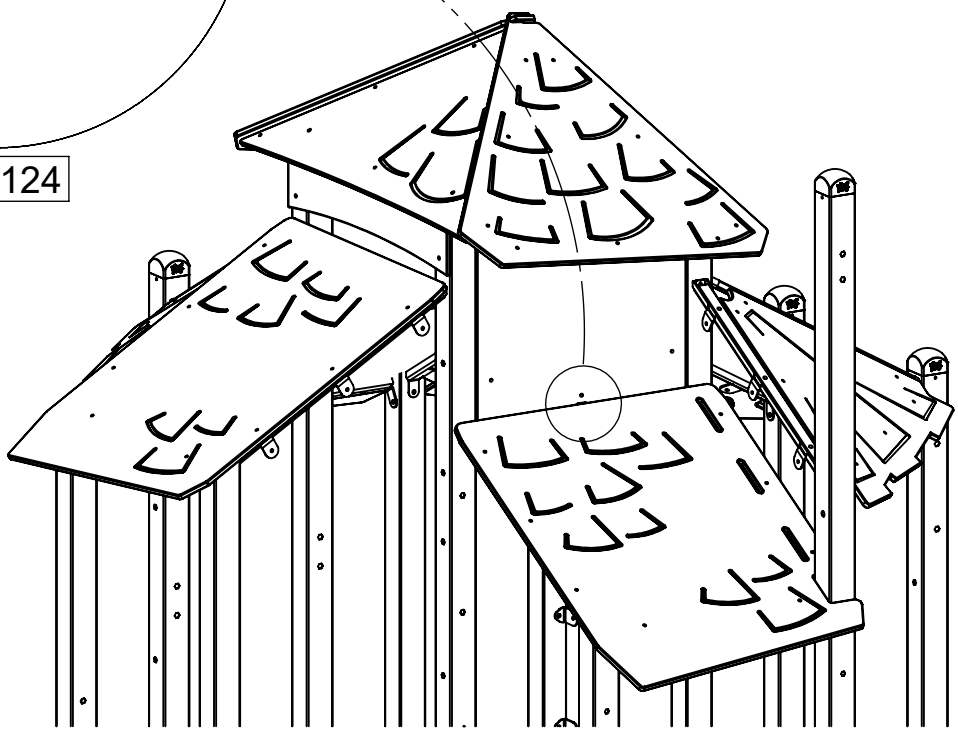

vinci play

[cm]

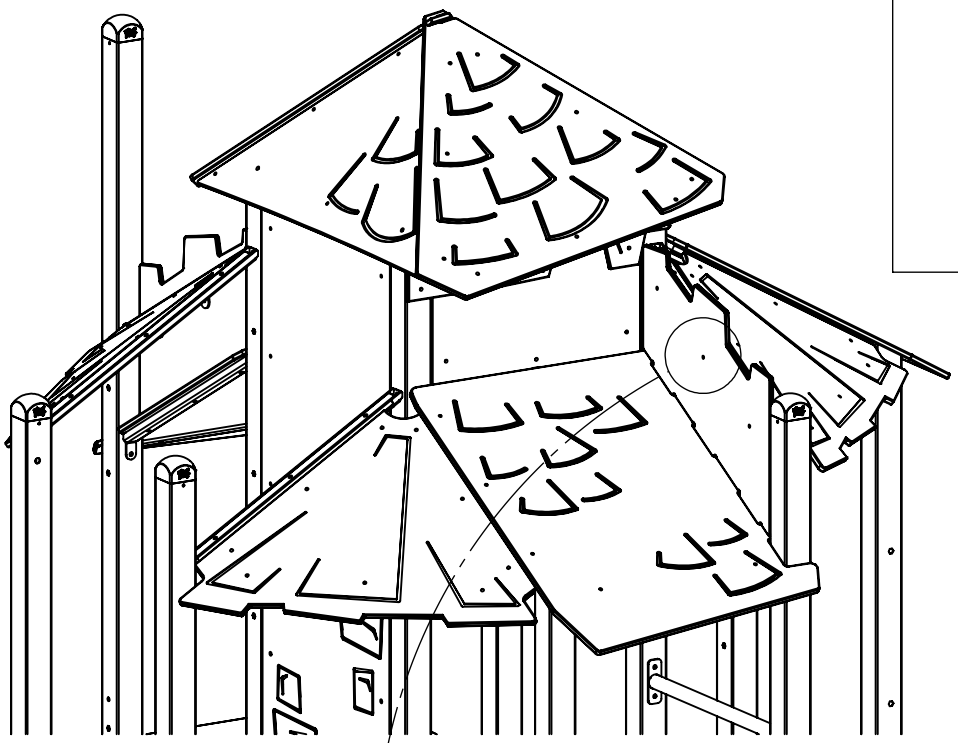

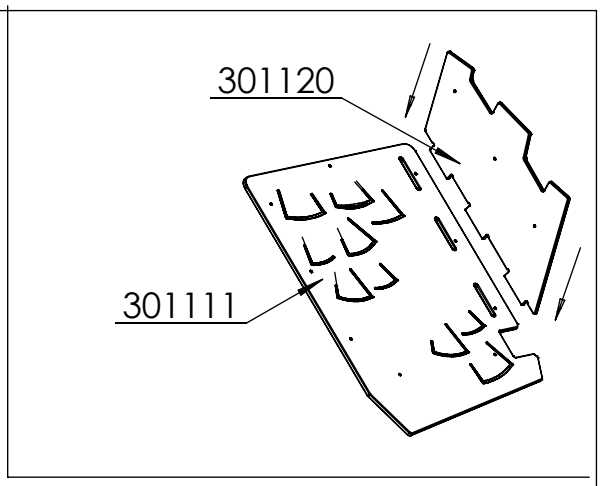

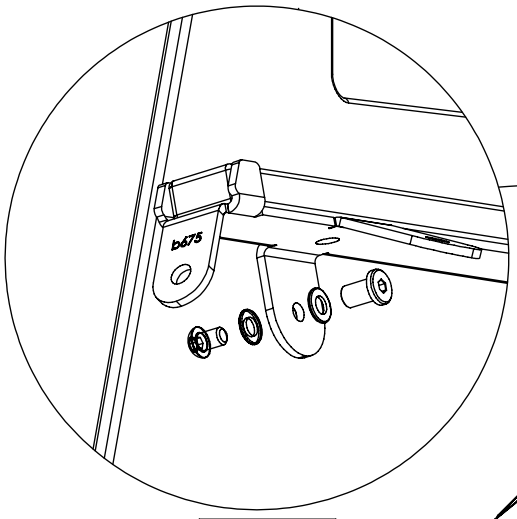

2x 30c106

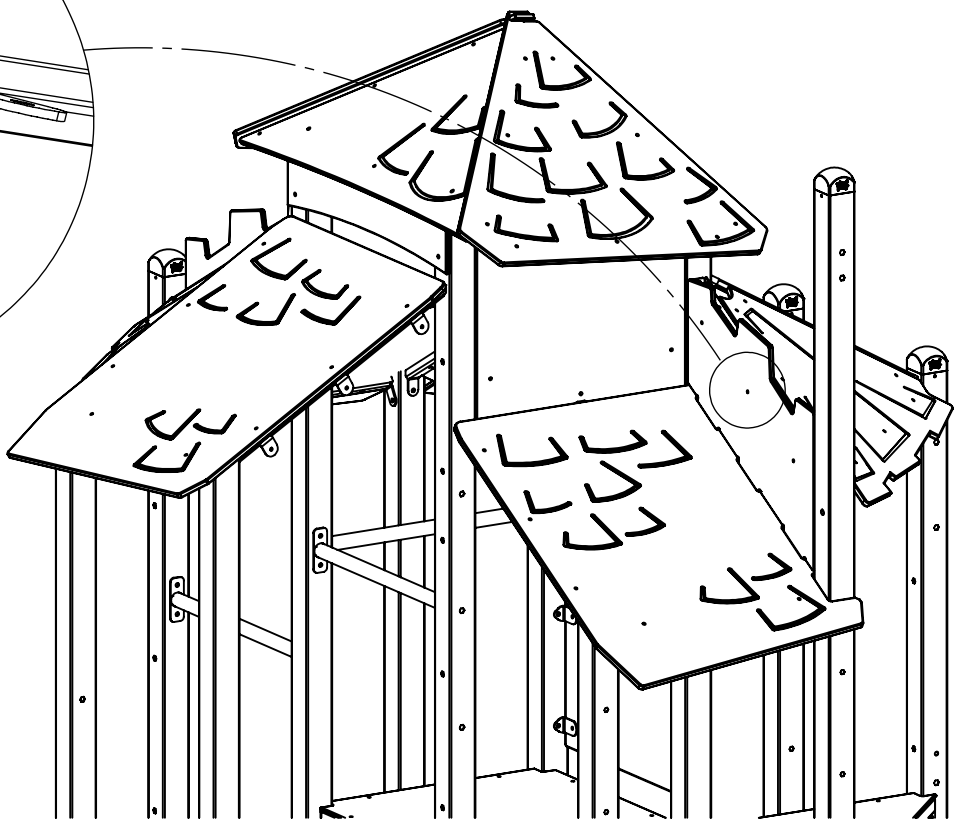

[cm]

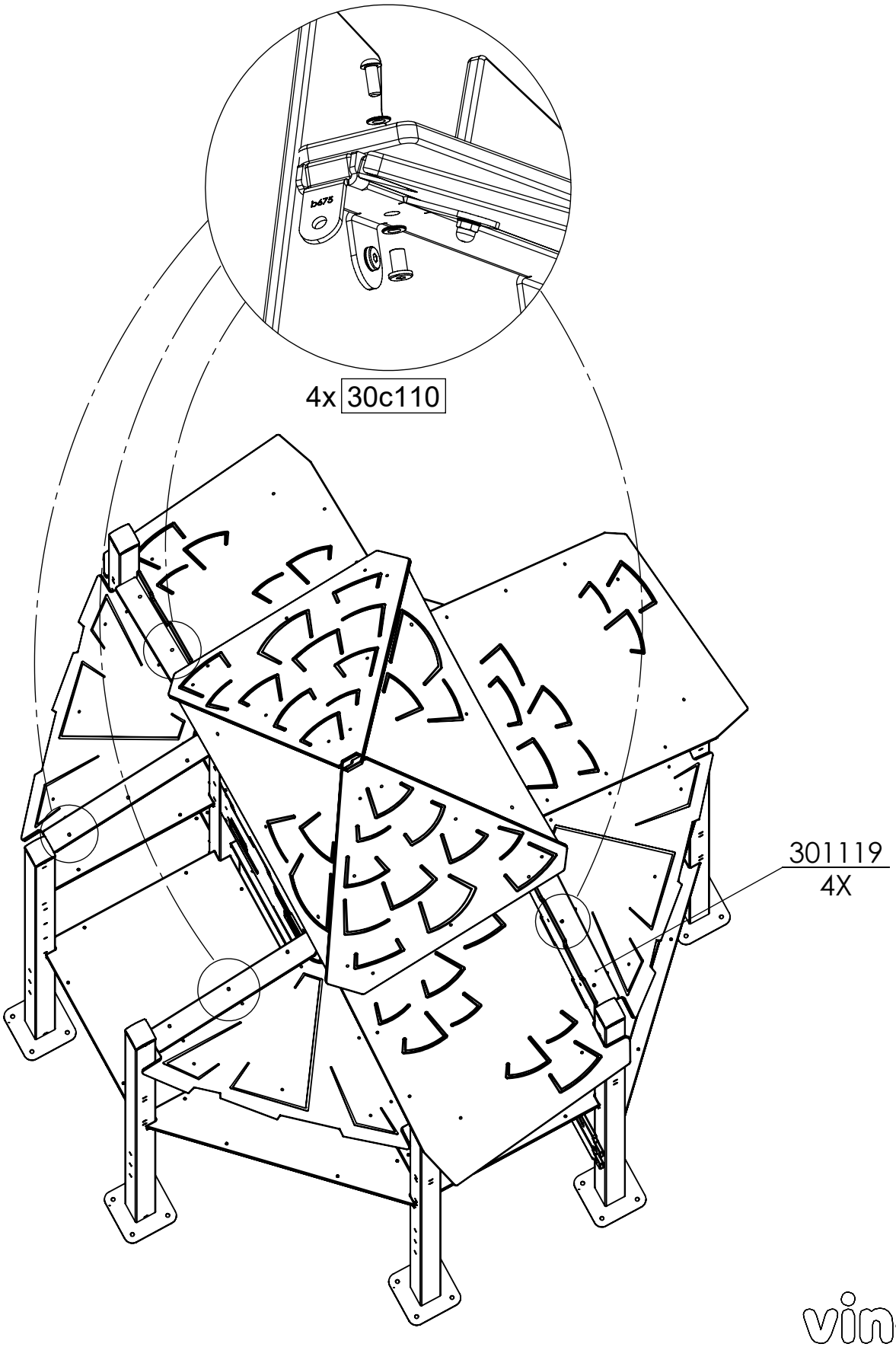

[cm]

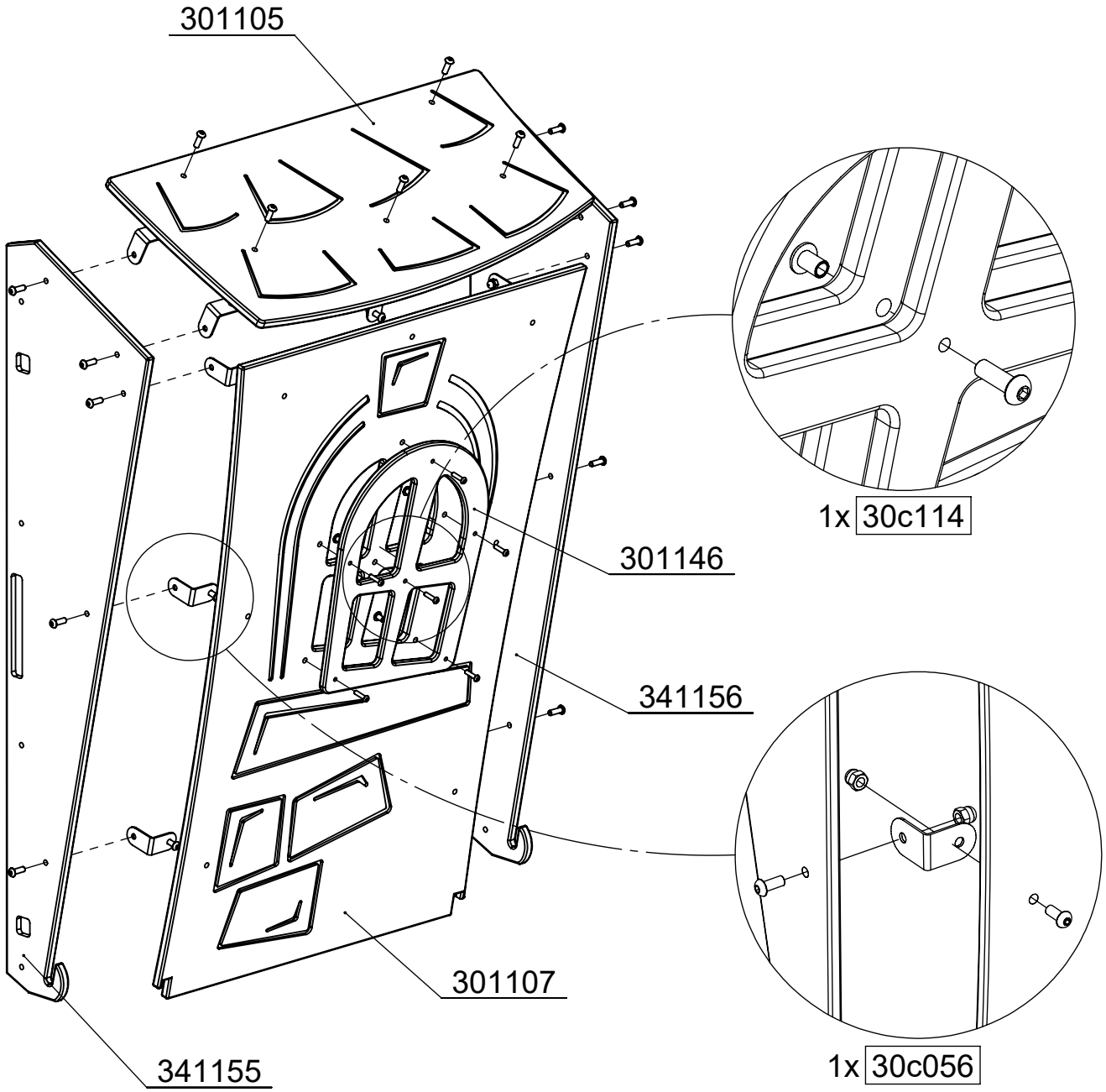

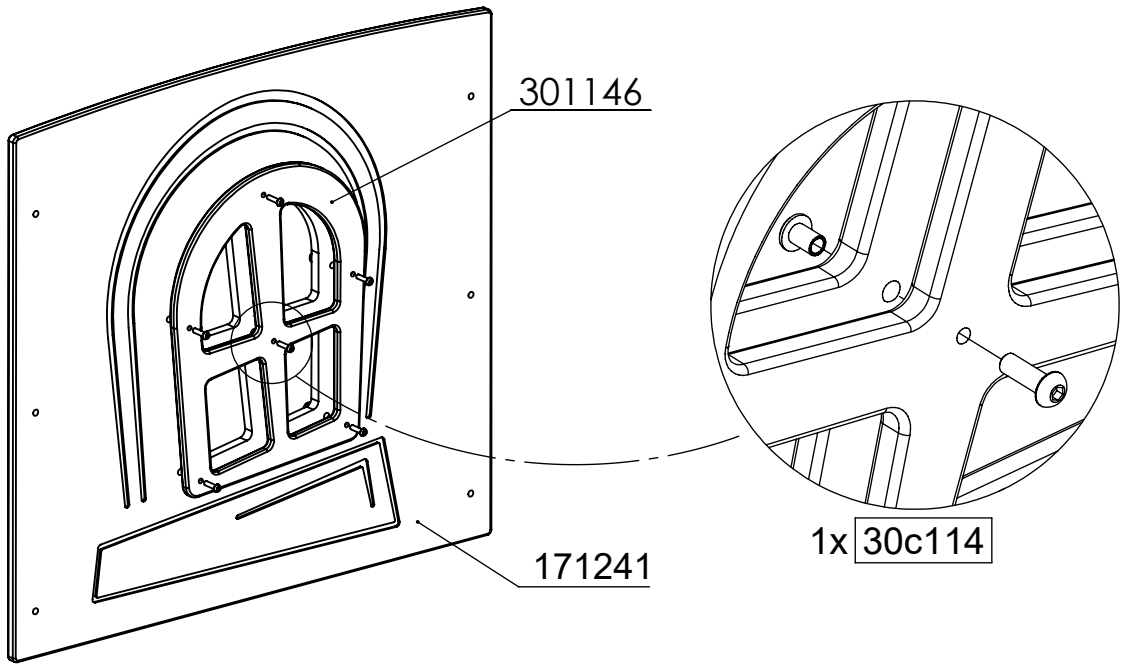

[cm]

vinci play

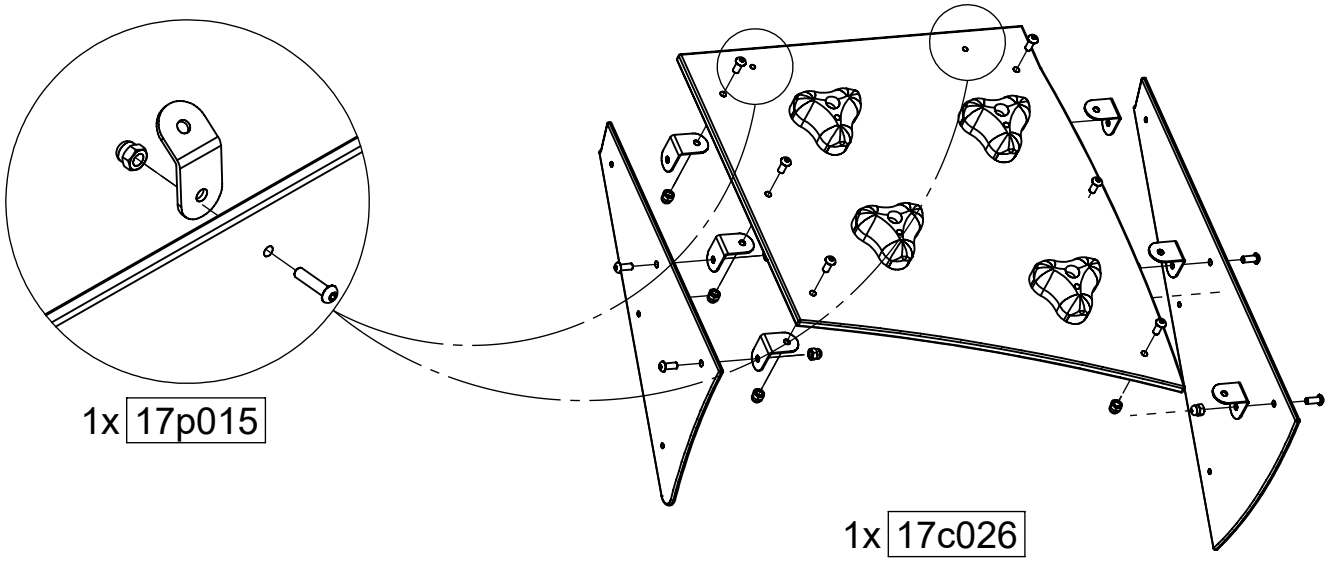

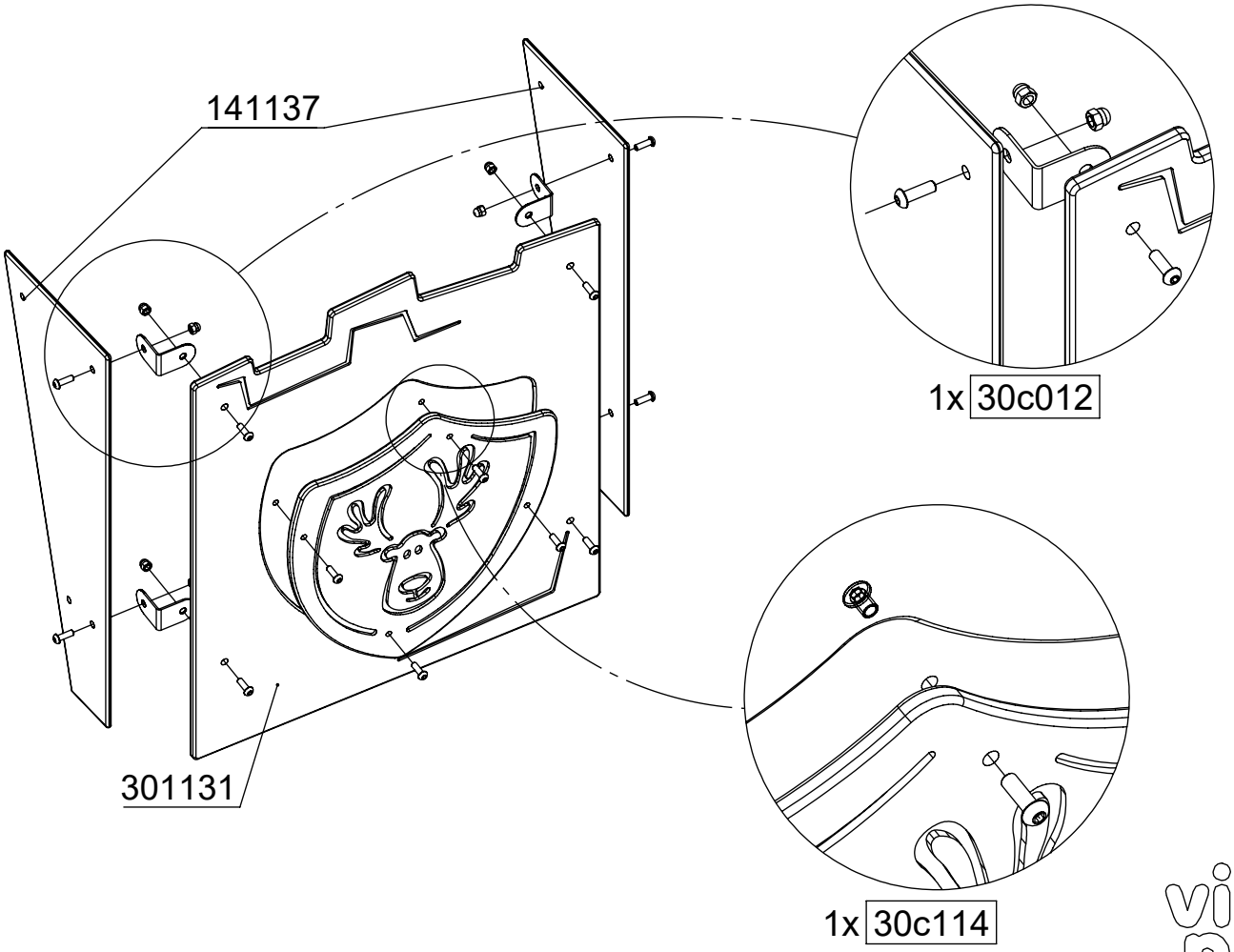

[cm]

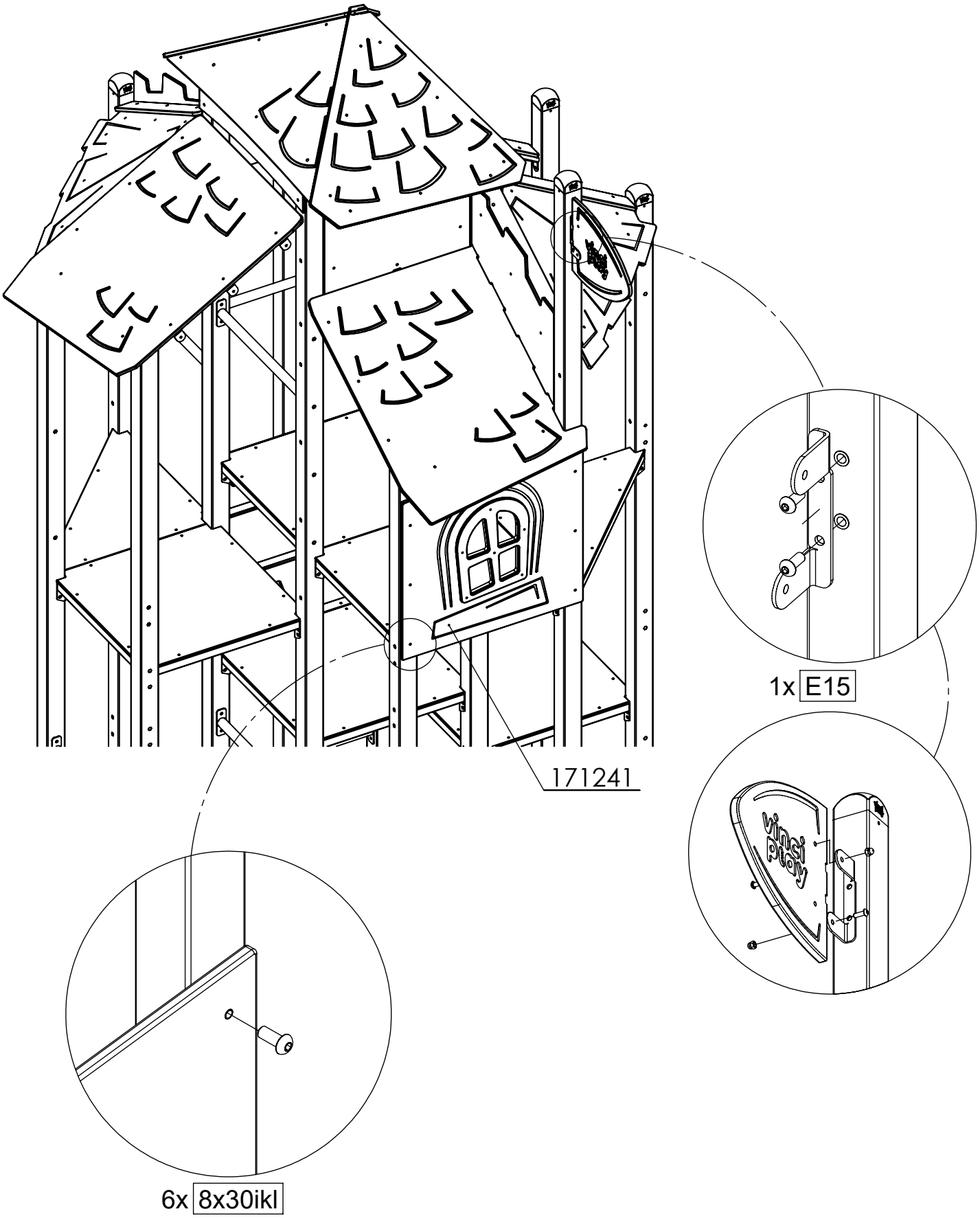

[cm]

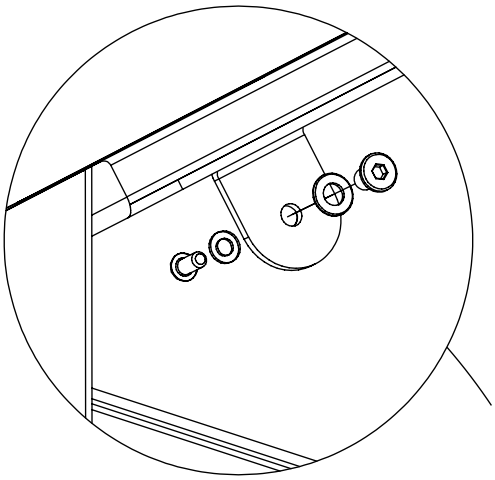

1x 30c112

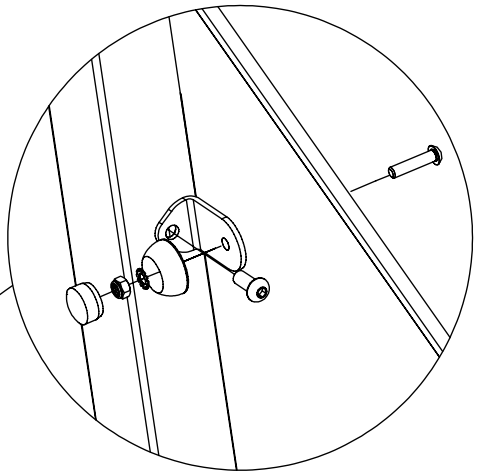

30c112

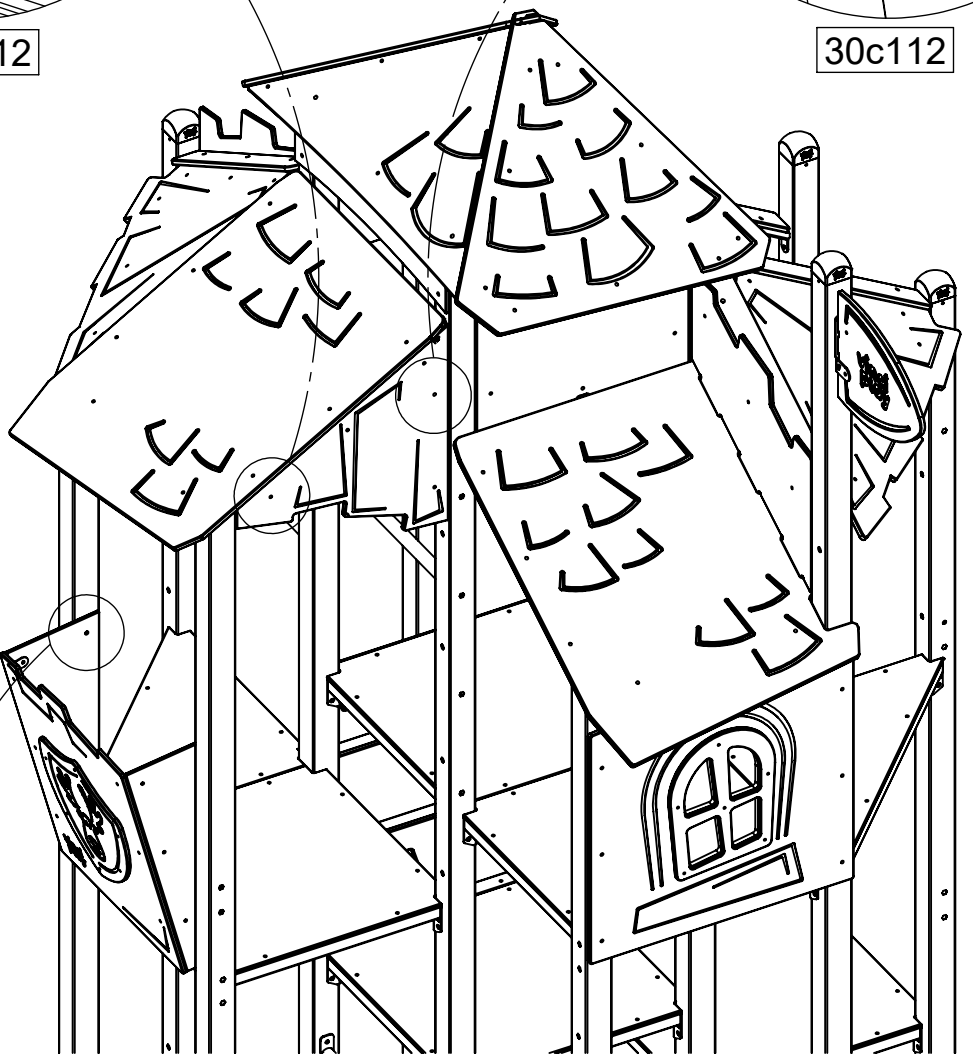

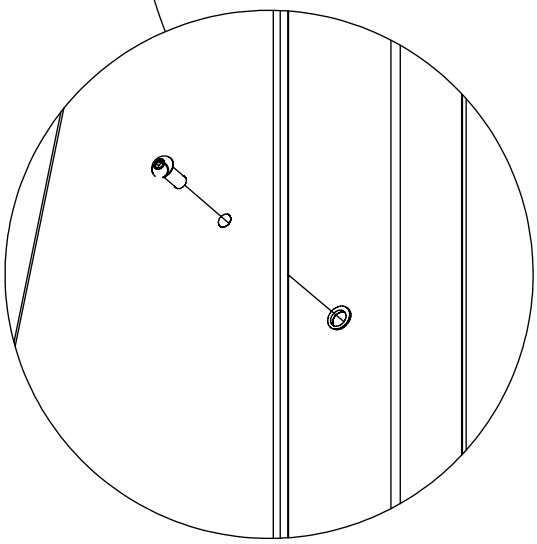

4x 10x25ikl

[cm]

vinci play

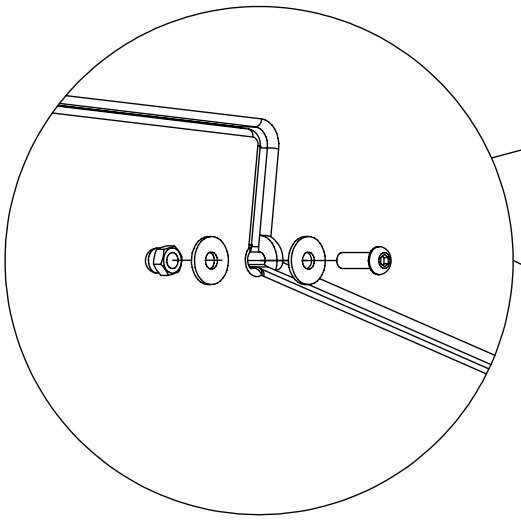

1x 30e057

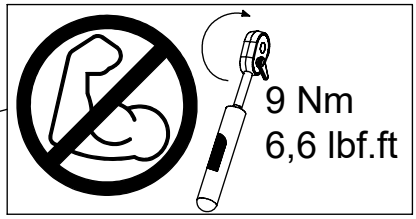

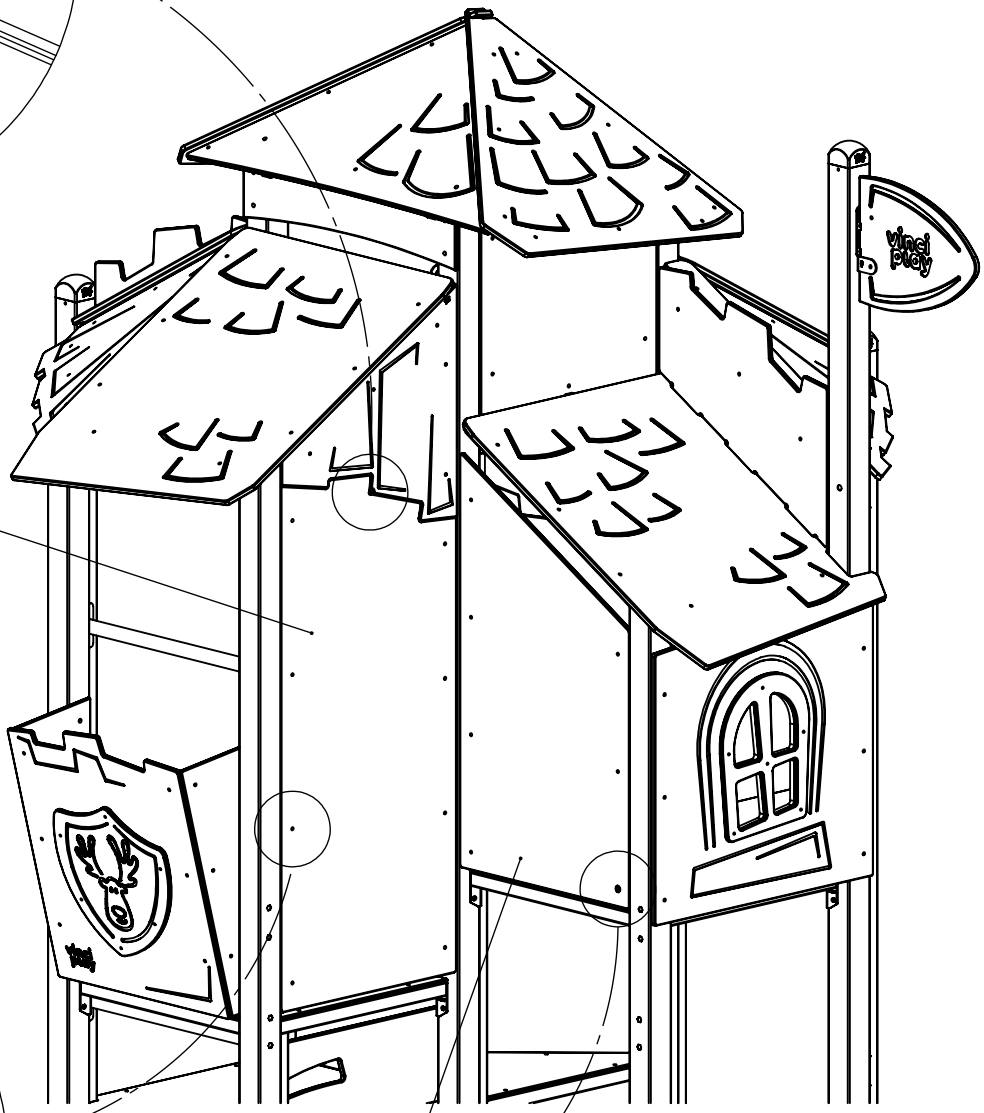

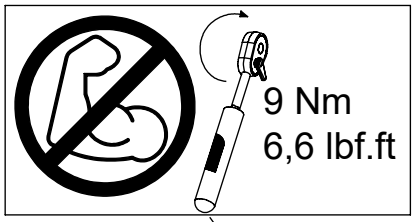

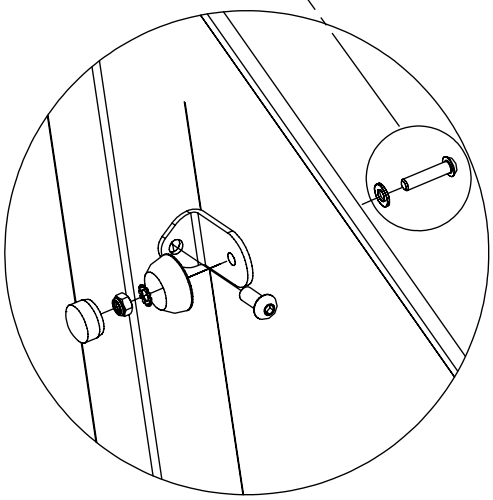

2x 30e056

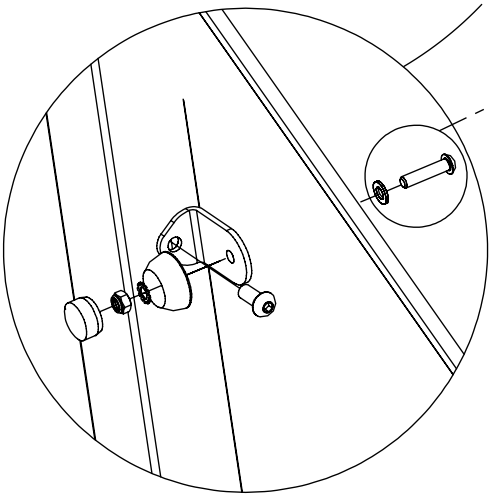

1x 30e067

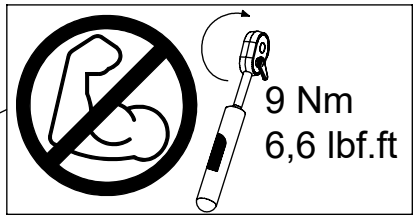

[cm]

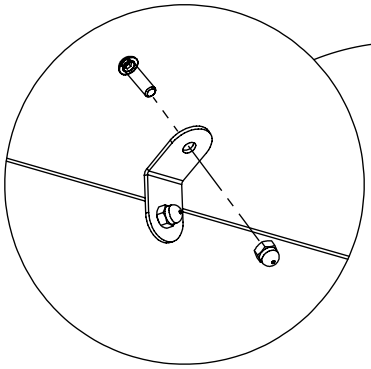

30c148

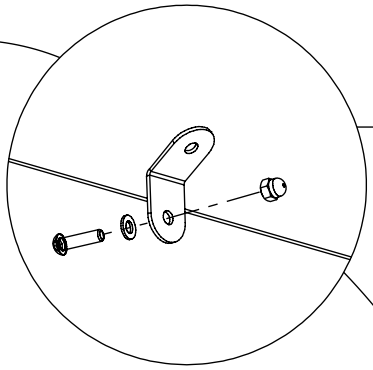

1x 30e080

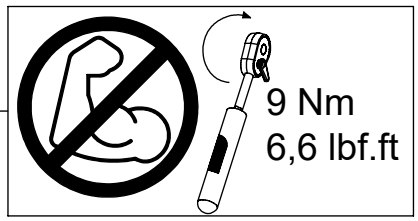

i391

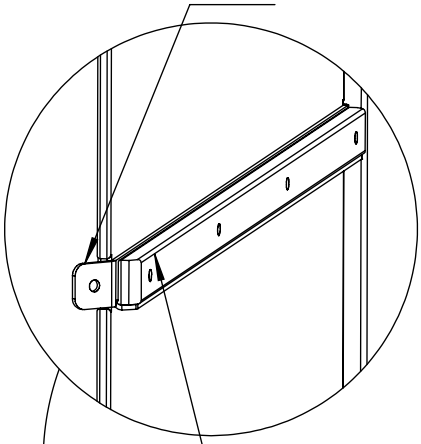

301243

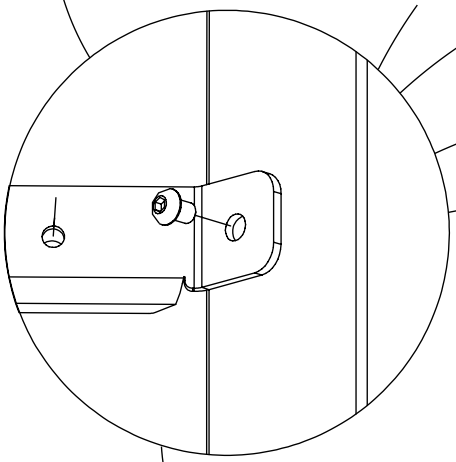

1x 30e072

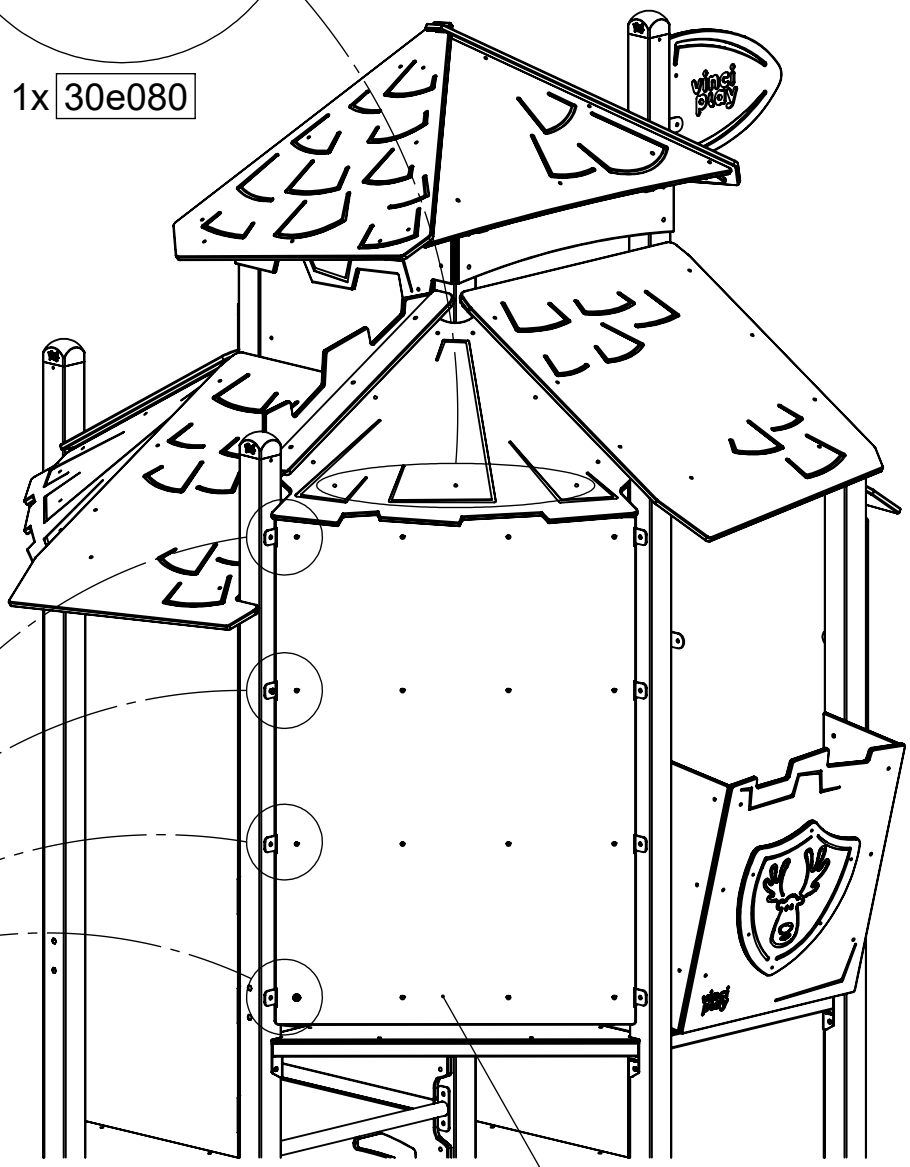

301180

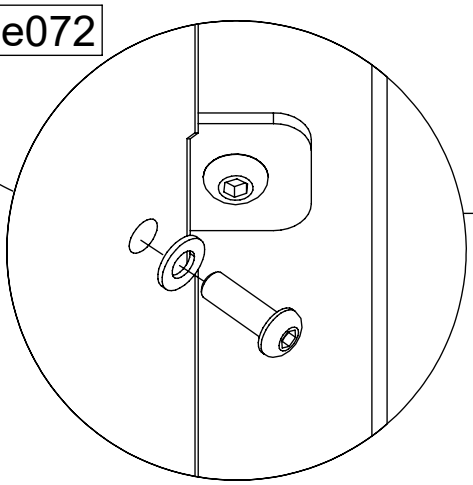

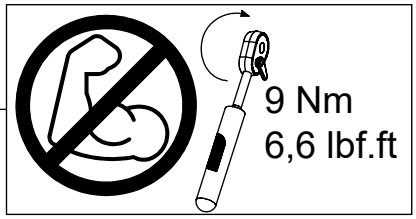

[cm]

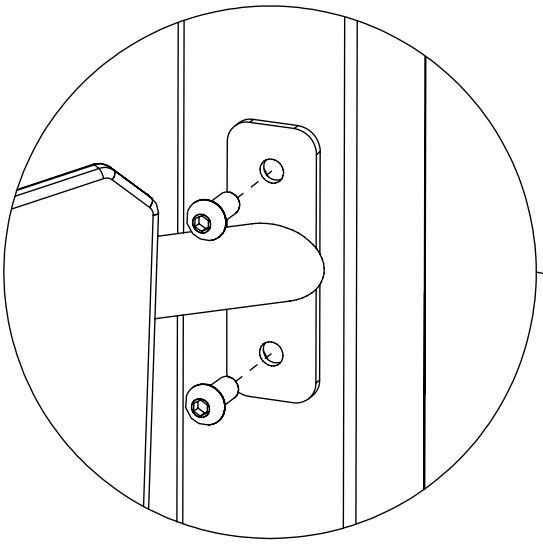

8x 10x25ikl

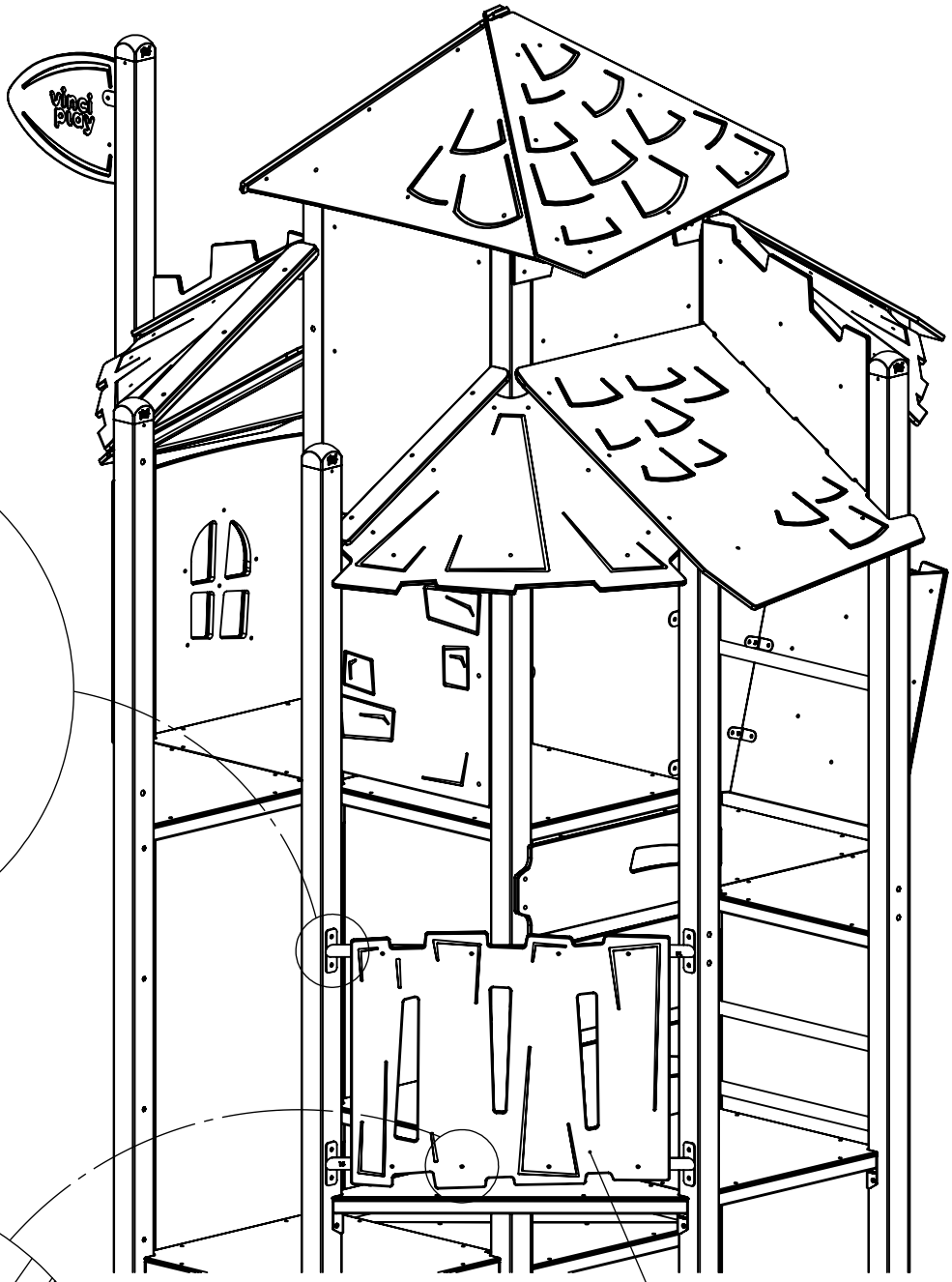

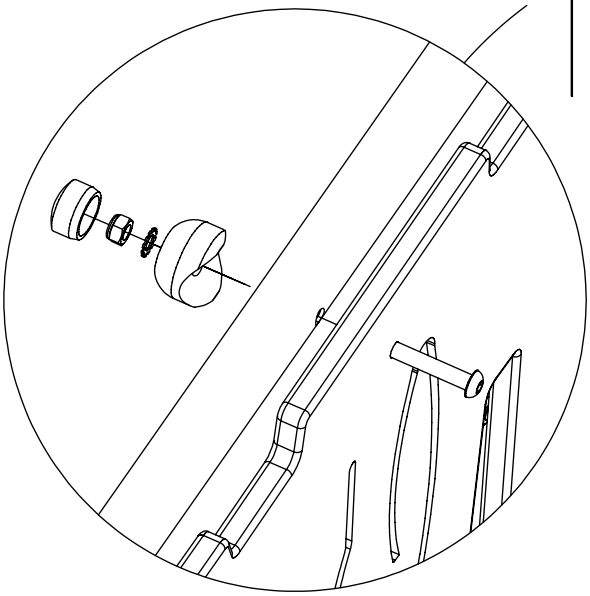

1x 30c006

[cm]

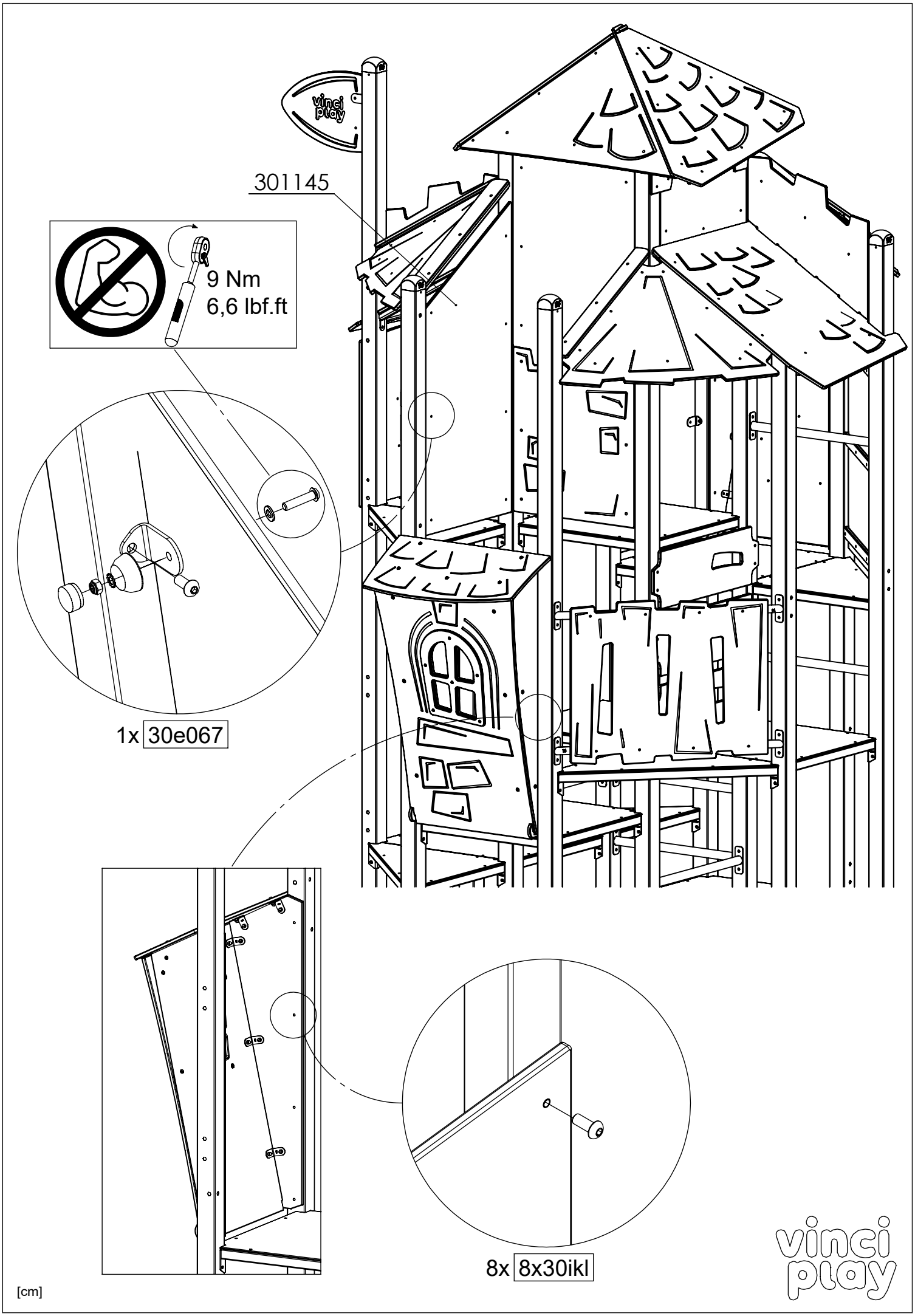
301145
9 Nm
6,6 lbf.ft
1x 30e067
8x 8x30ikl
[cm]

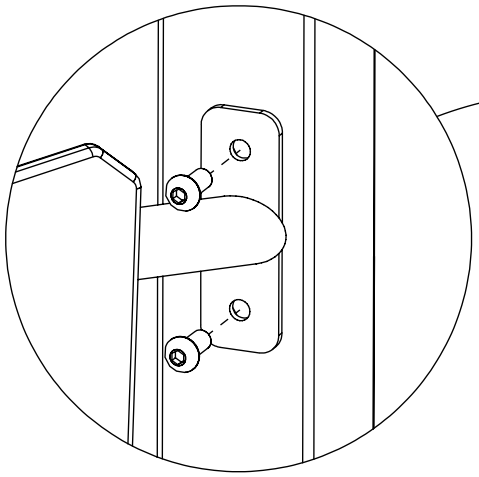

8x 10x25ikl

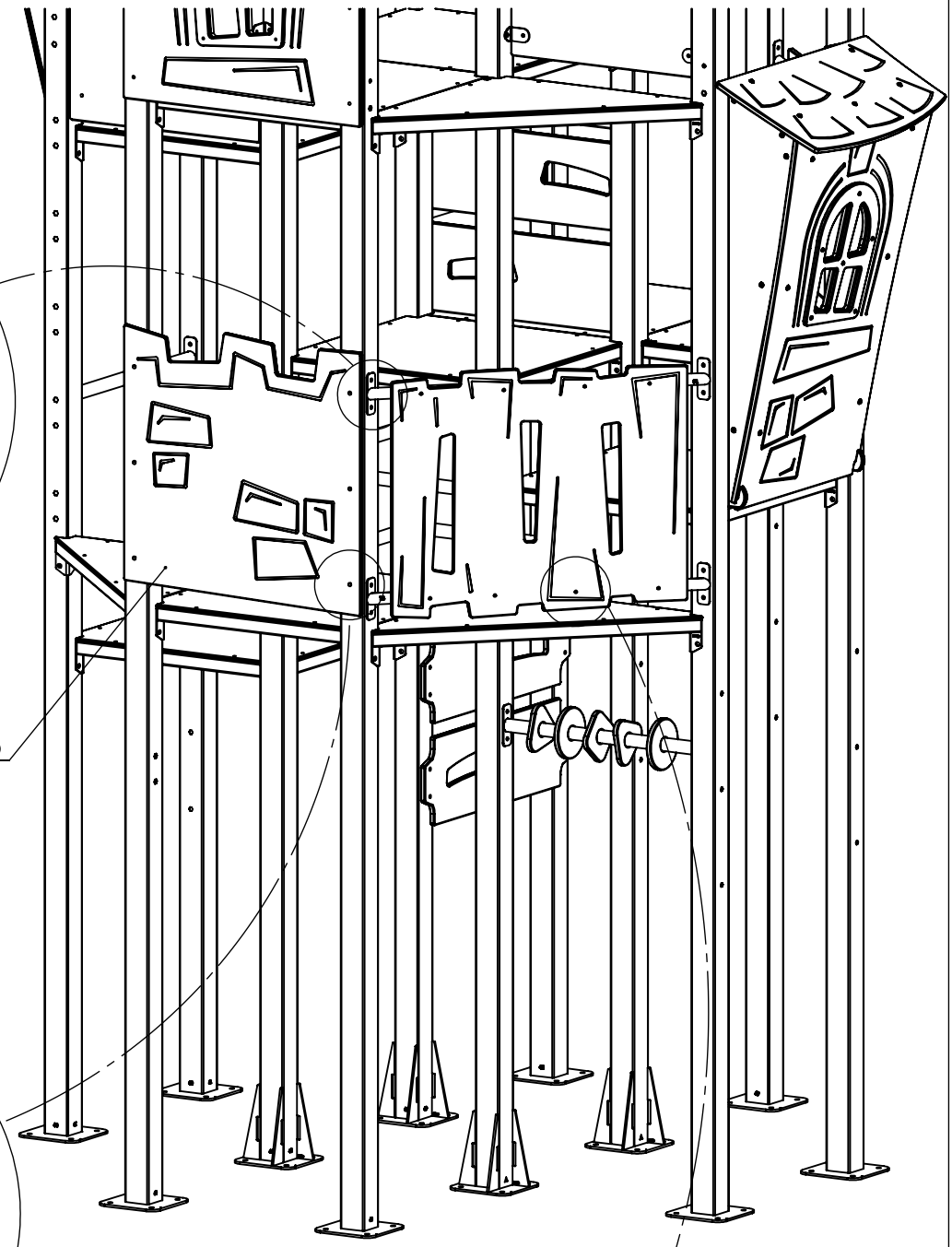

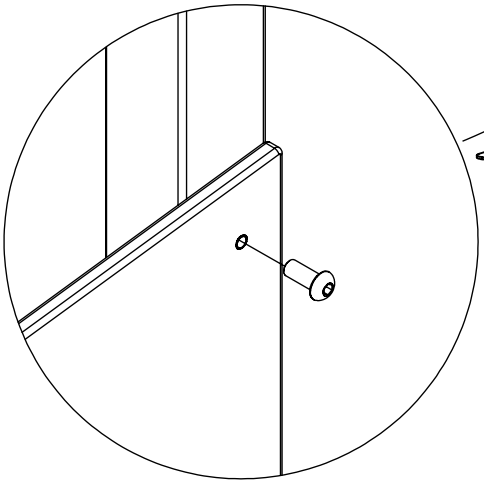

6x 8x25ikl

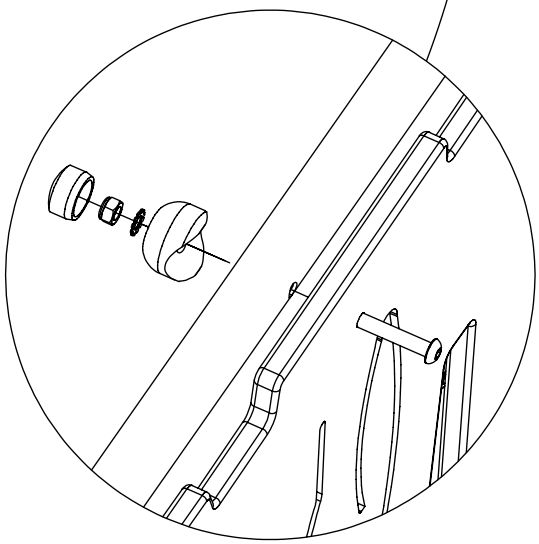

1x 30c006

[cm]

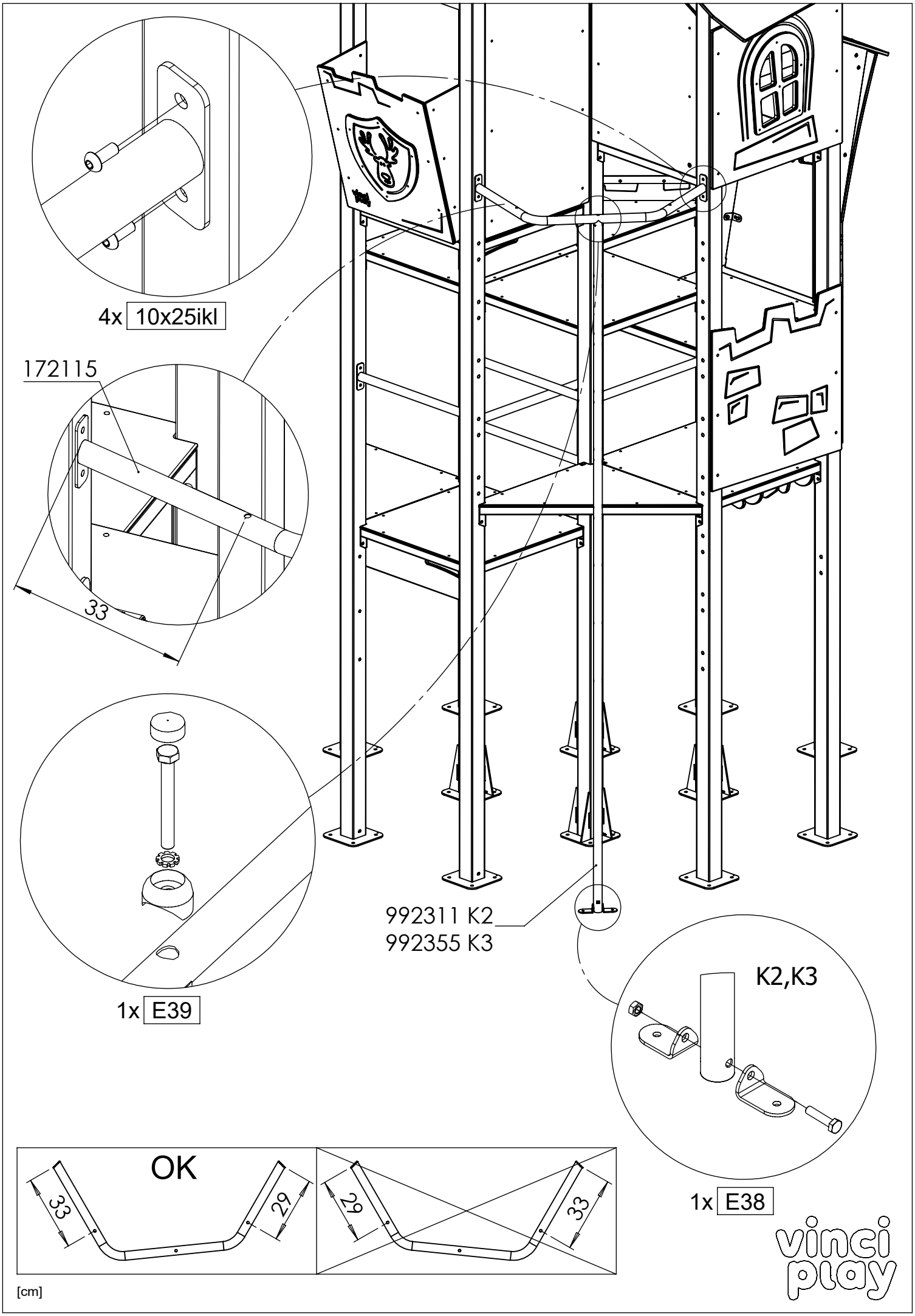
4x 10x25ikl
172115
33
1x E39
992311 K2
992355 K3
K2,K3
1x E38
OK
33
29
29
33
[cm]
vinci play

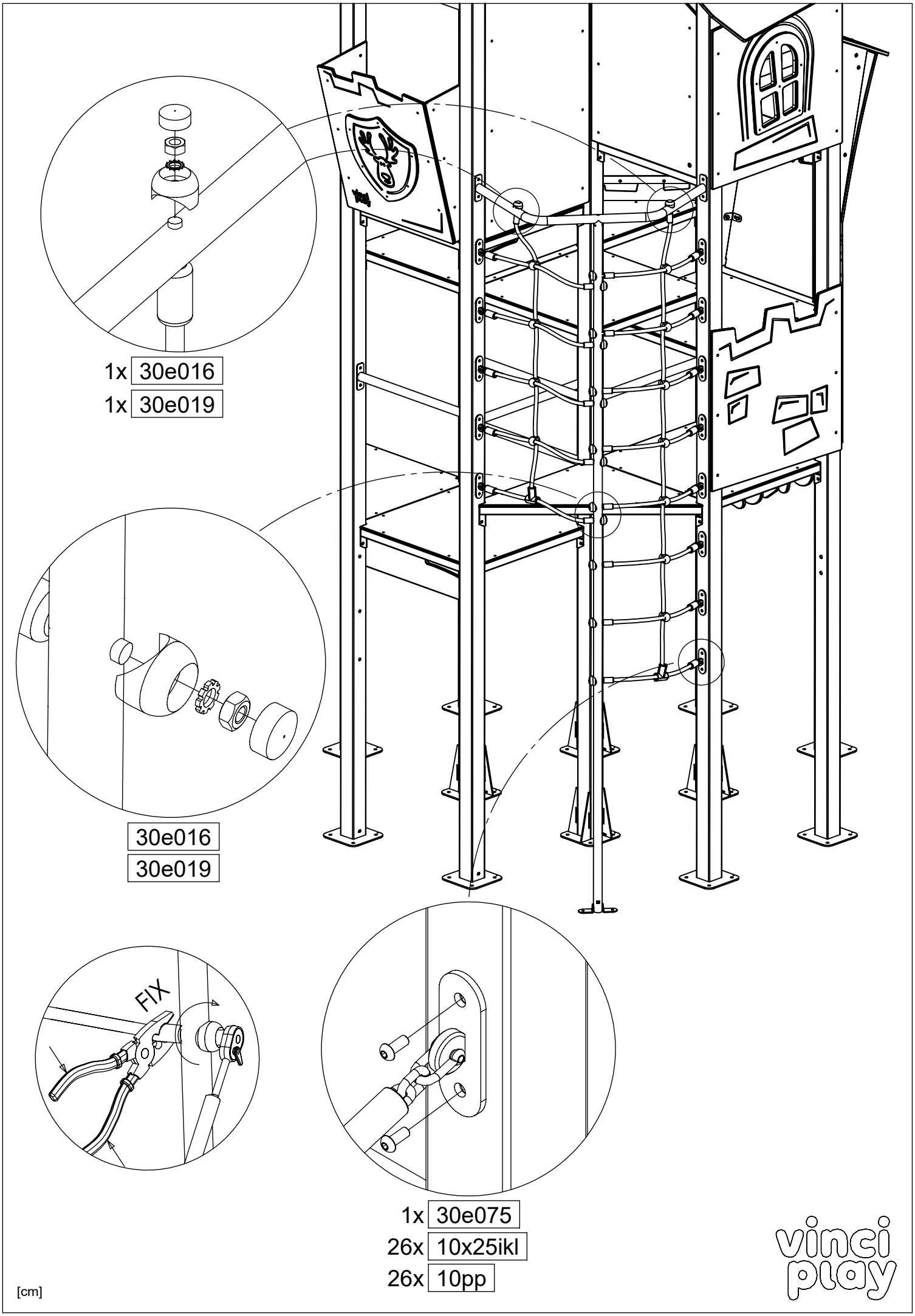
1x 30e016
1x 30e019
30e016
30e019
FIX
1x 30e075
26x 10x25ikl
26x 10pp
[cm]
vinci play

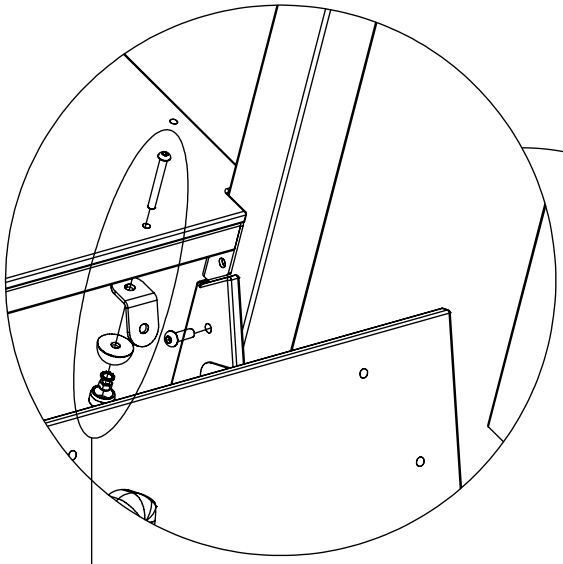

1x 17p021

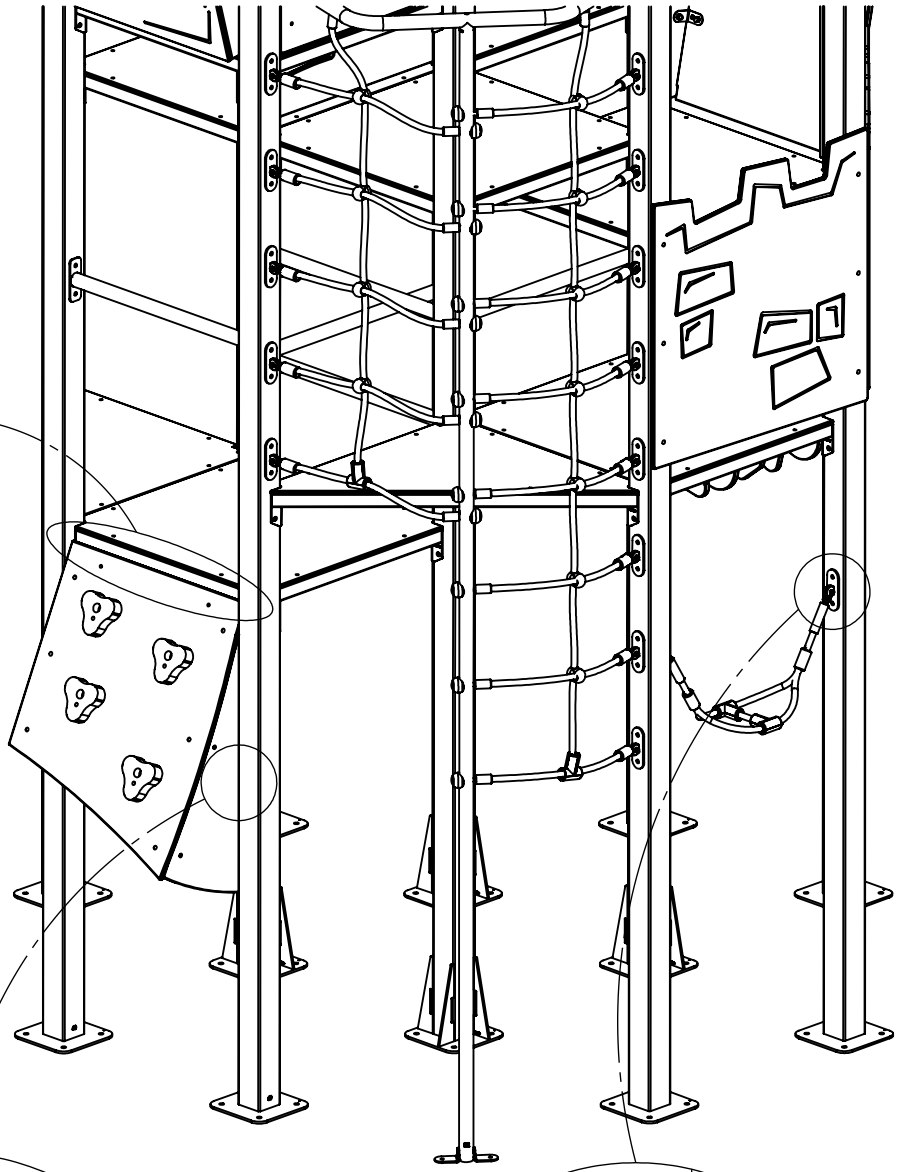

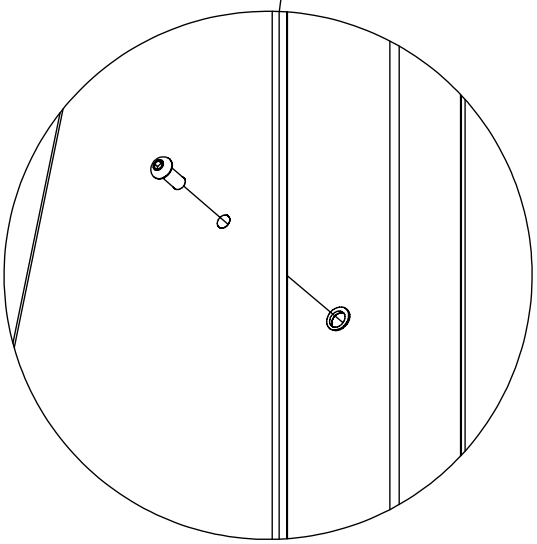

6x 8x25ikl

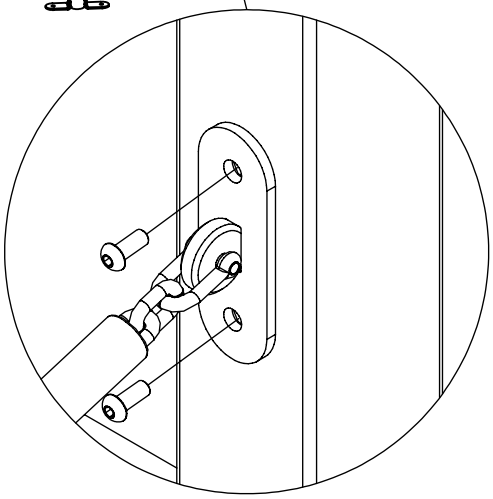

1x 17e050
4x 10x25ikl
4x 10pp

[cm]

vinci play

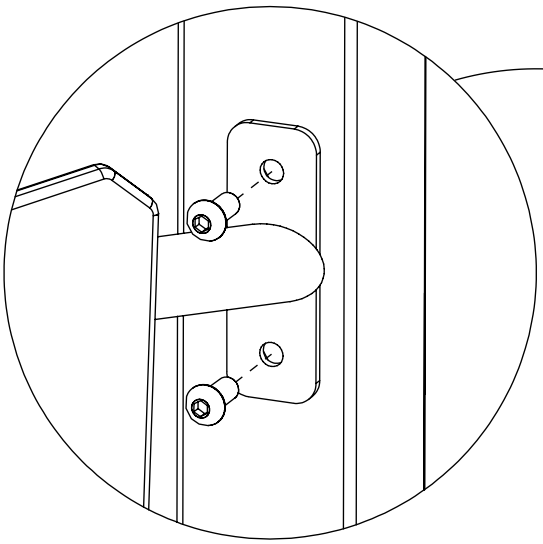

8x 10x25ikl

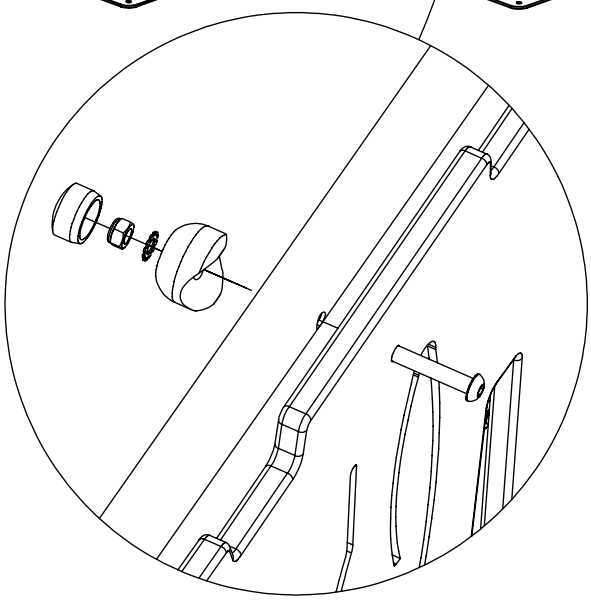

1x 30c006

[cm]

vinci play

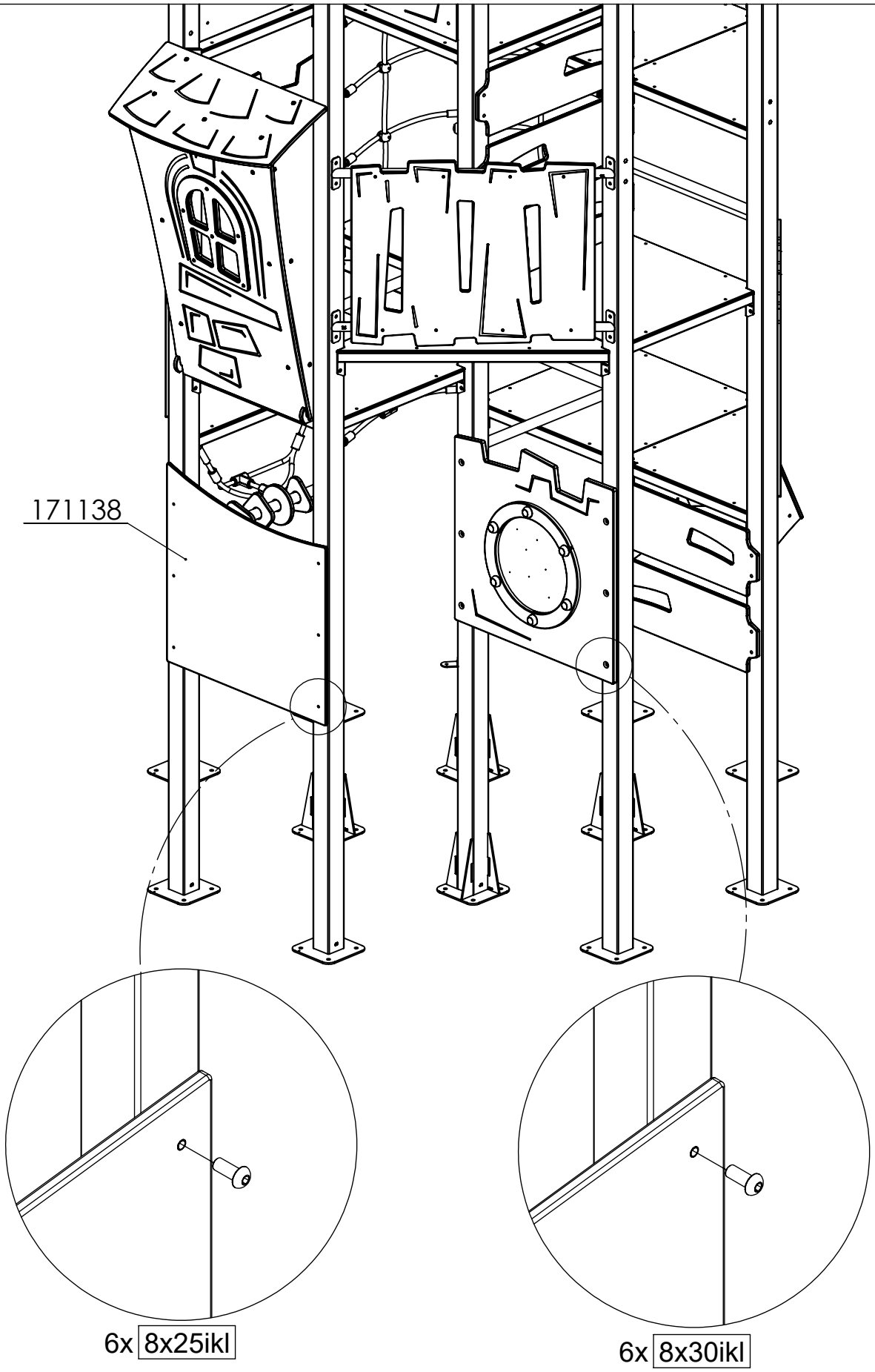

[cm]

vinci play

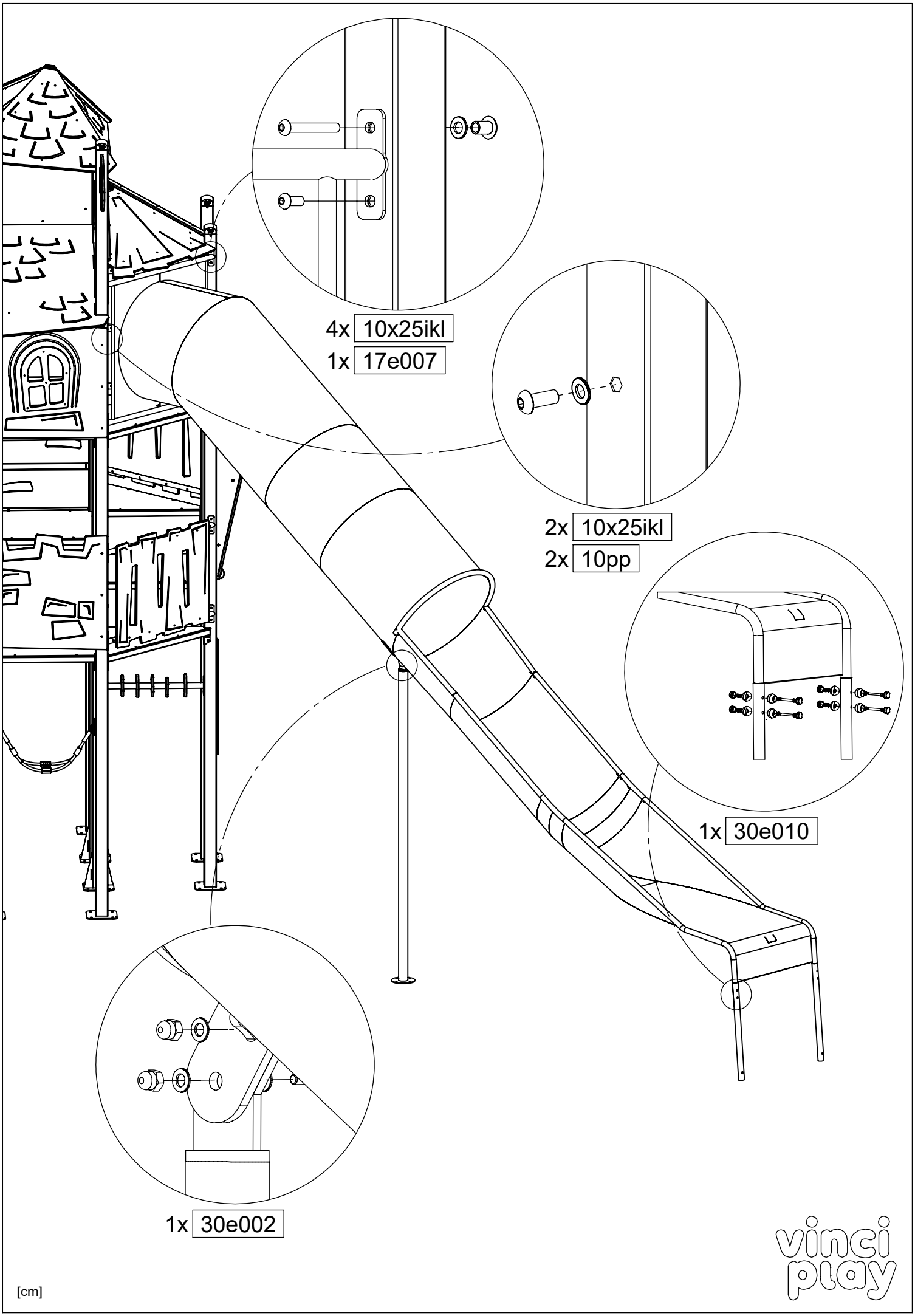
4x 10x25ikl
1x 17e007
2x 10x25ikl
2x 10pp
1x 30e010
1x 30e002
[cm]
vinci play

3060-1.04S2

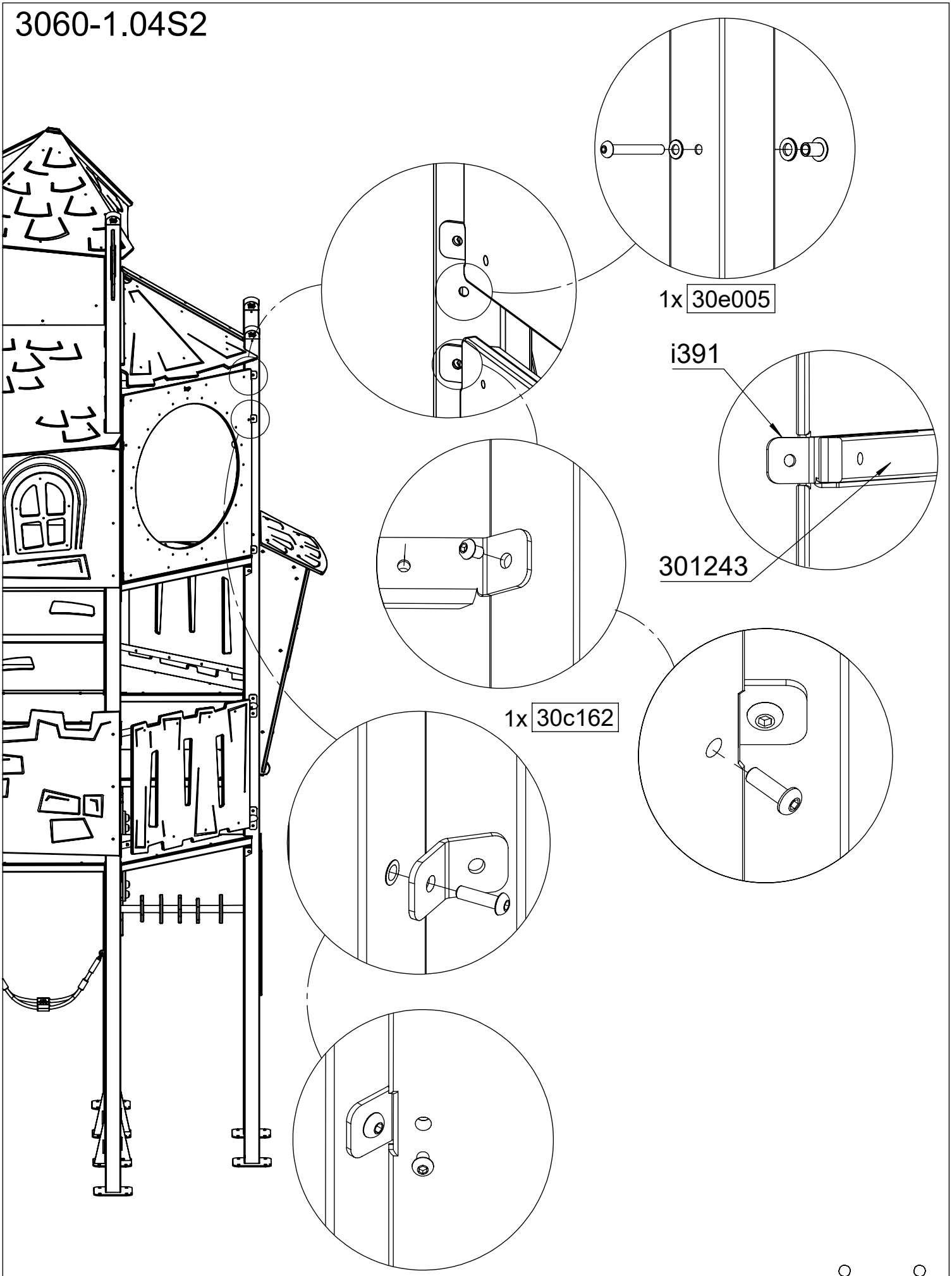

[cm]

vinci play

3060-1.04S2

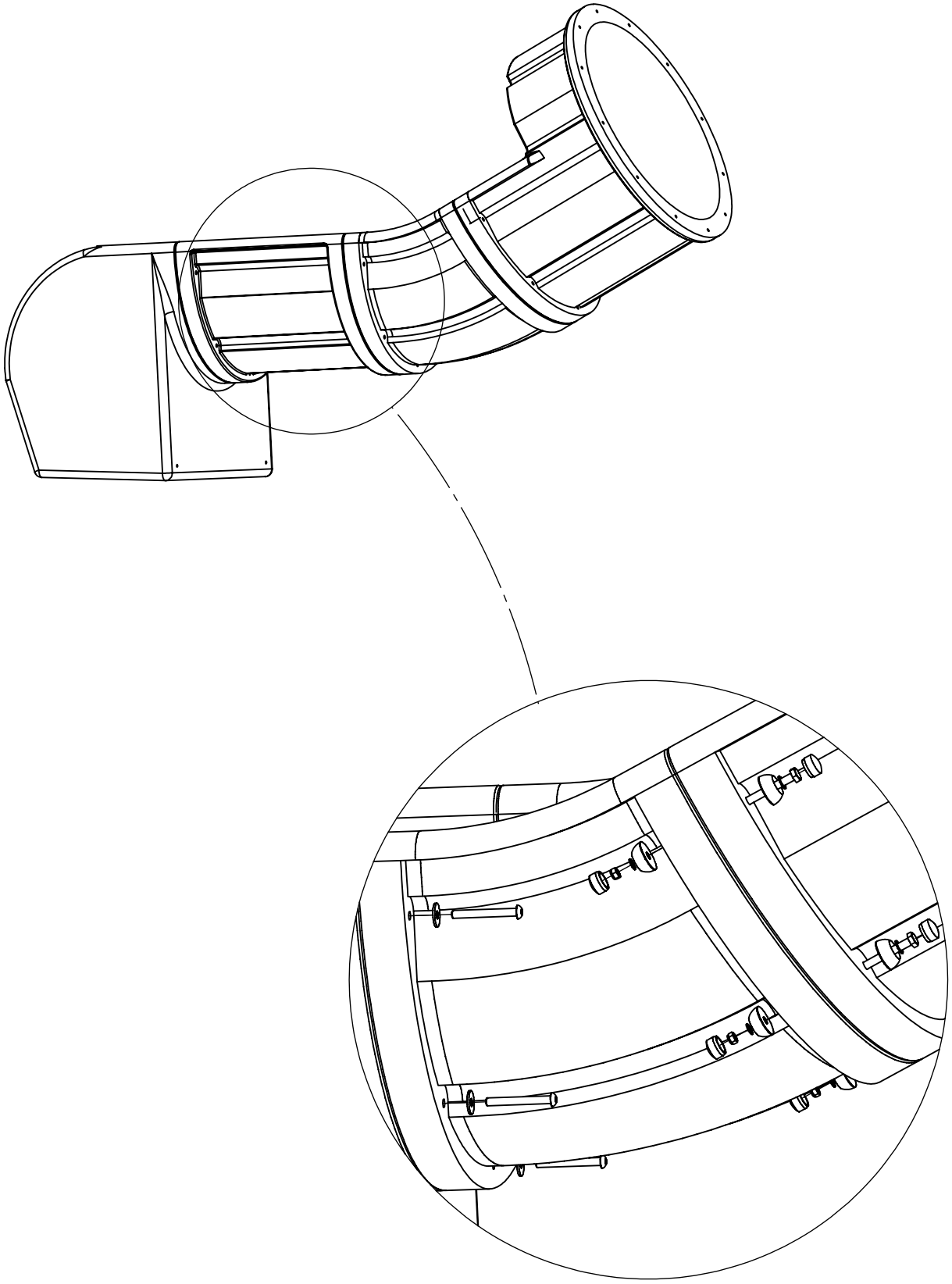

1x 30e102

[cm]

3060-1.04S2

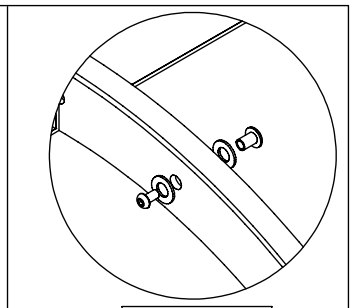

6x 30e090

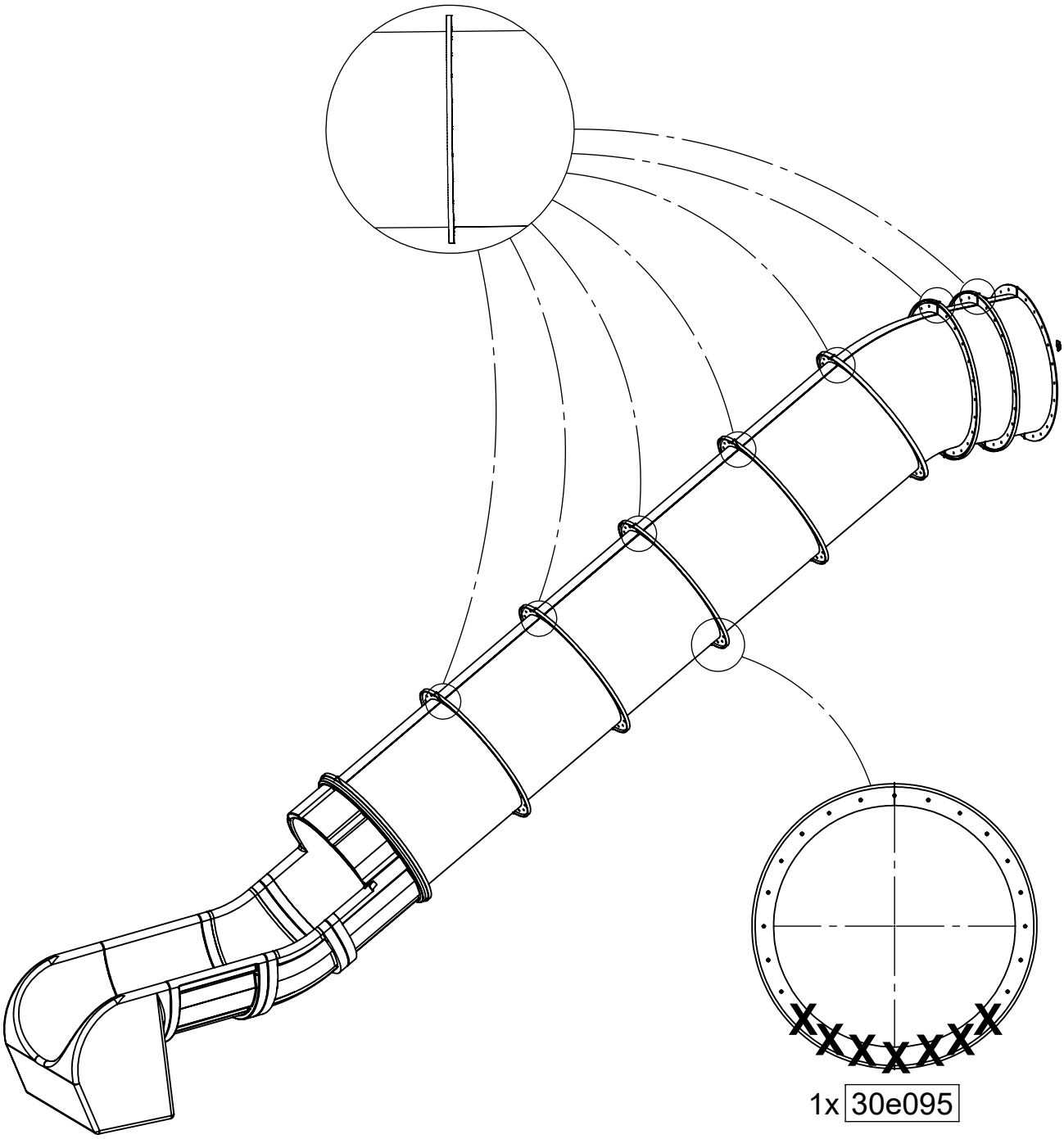

1x 30e095

[cm]

3060-1.04S2

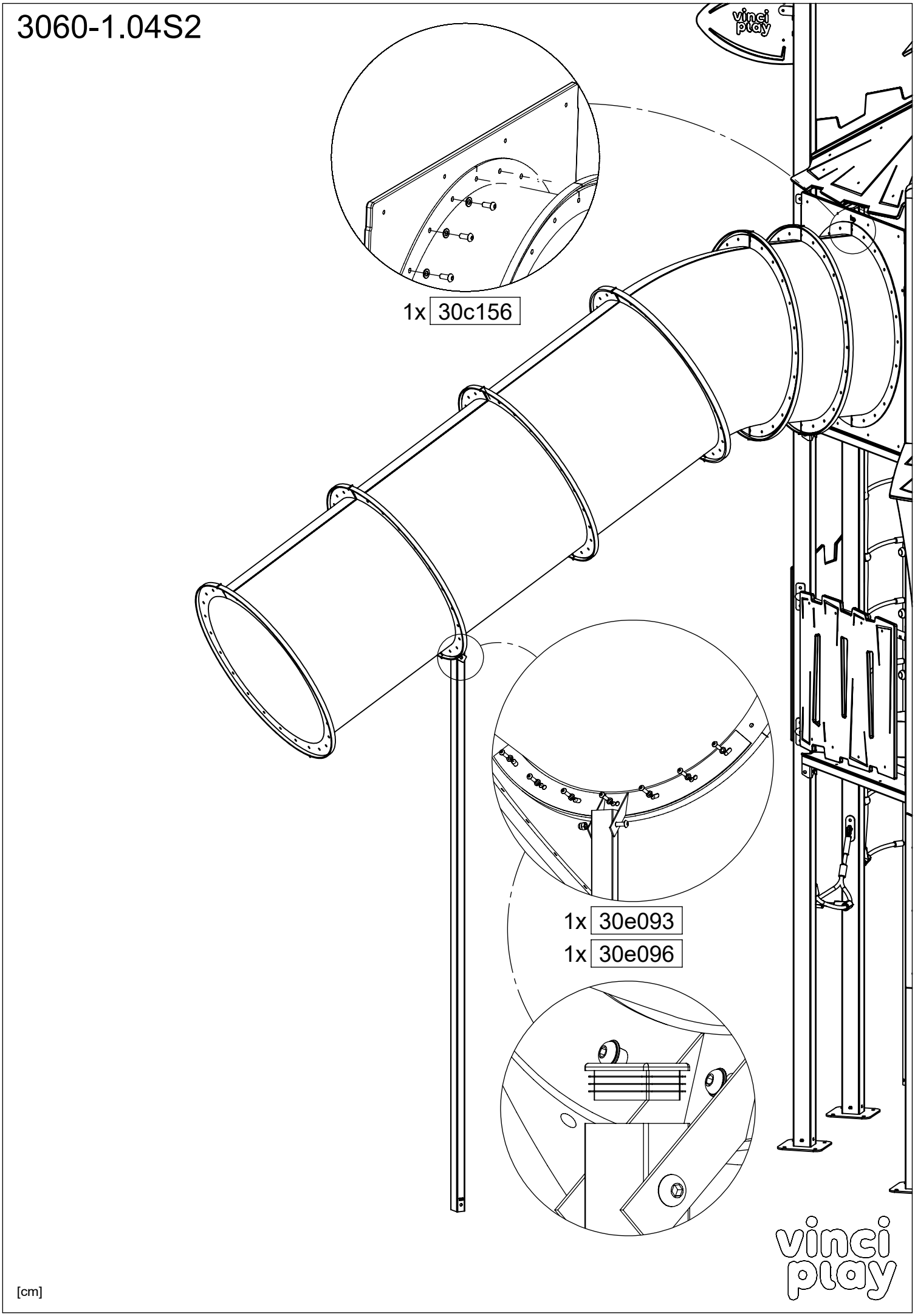

3060-1.04S2

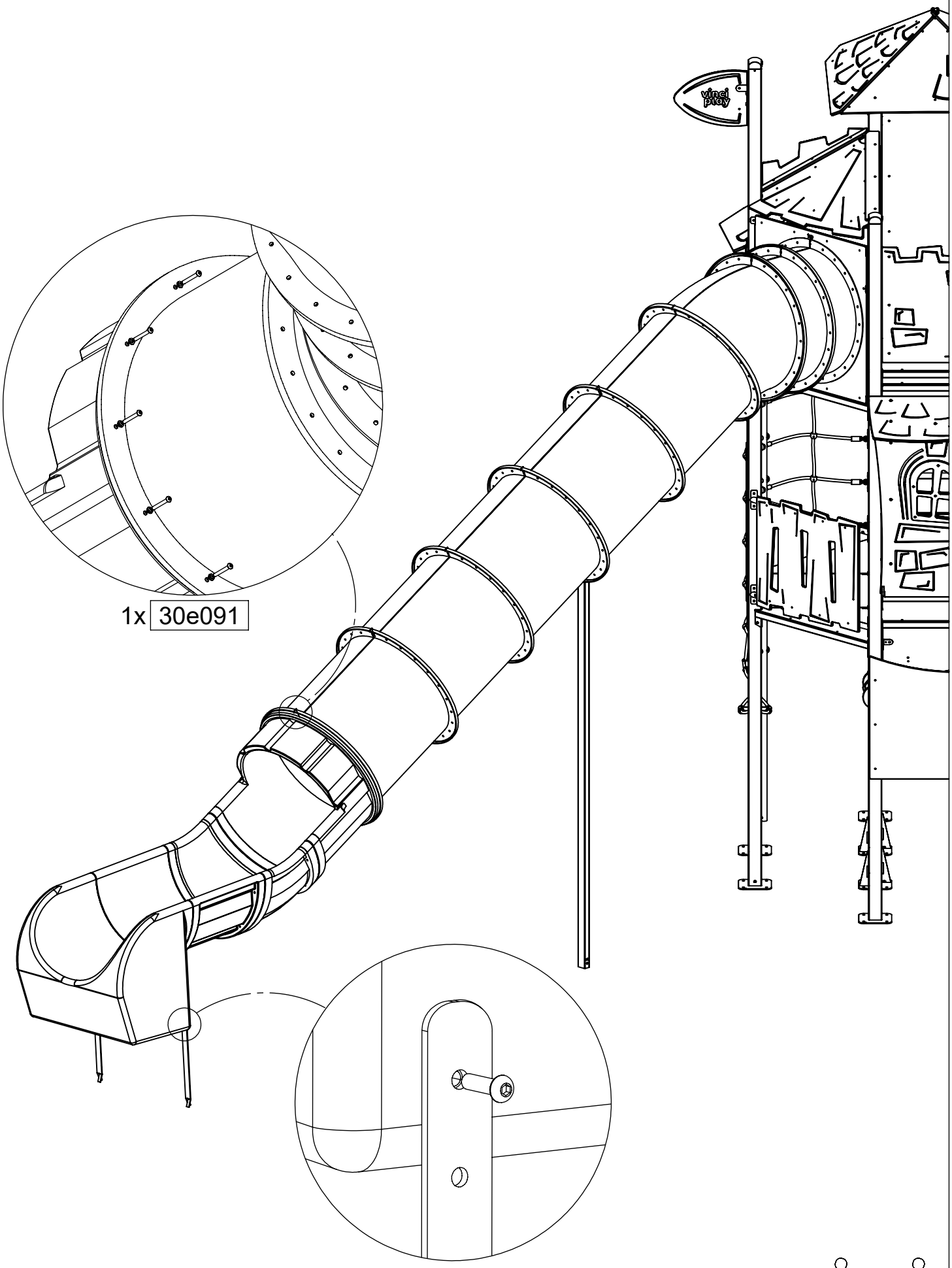

[cm]

3060-1.05

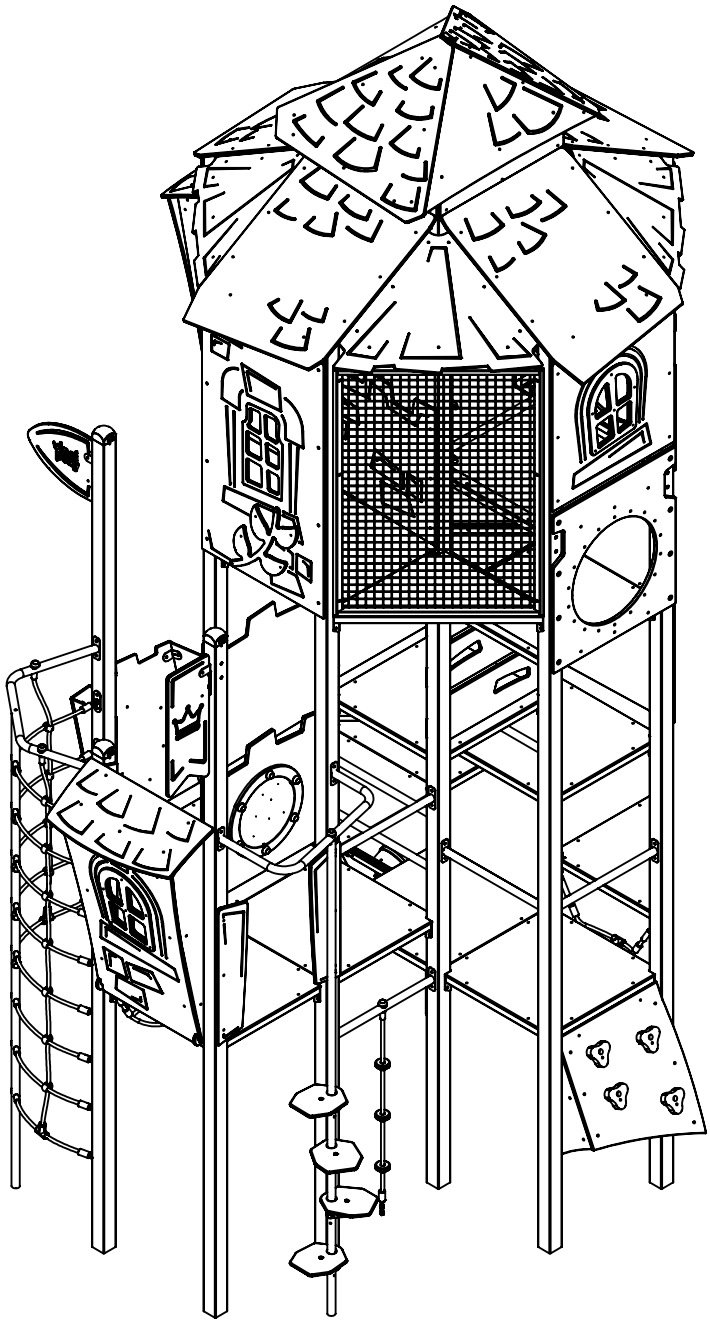

[cm]

vinci play

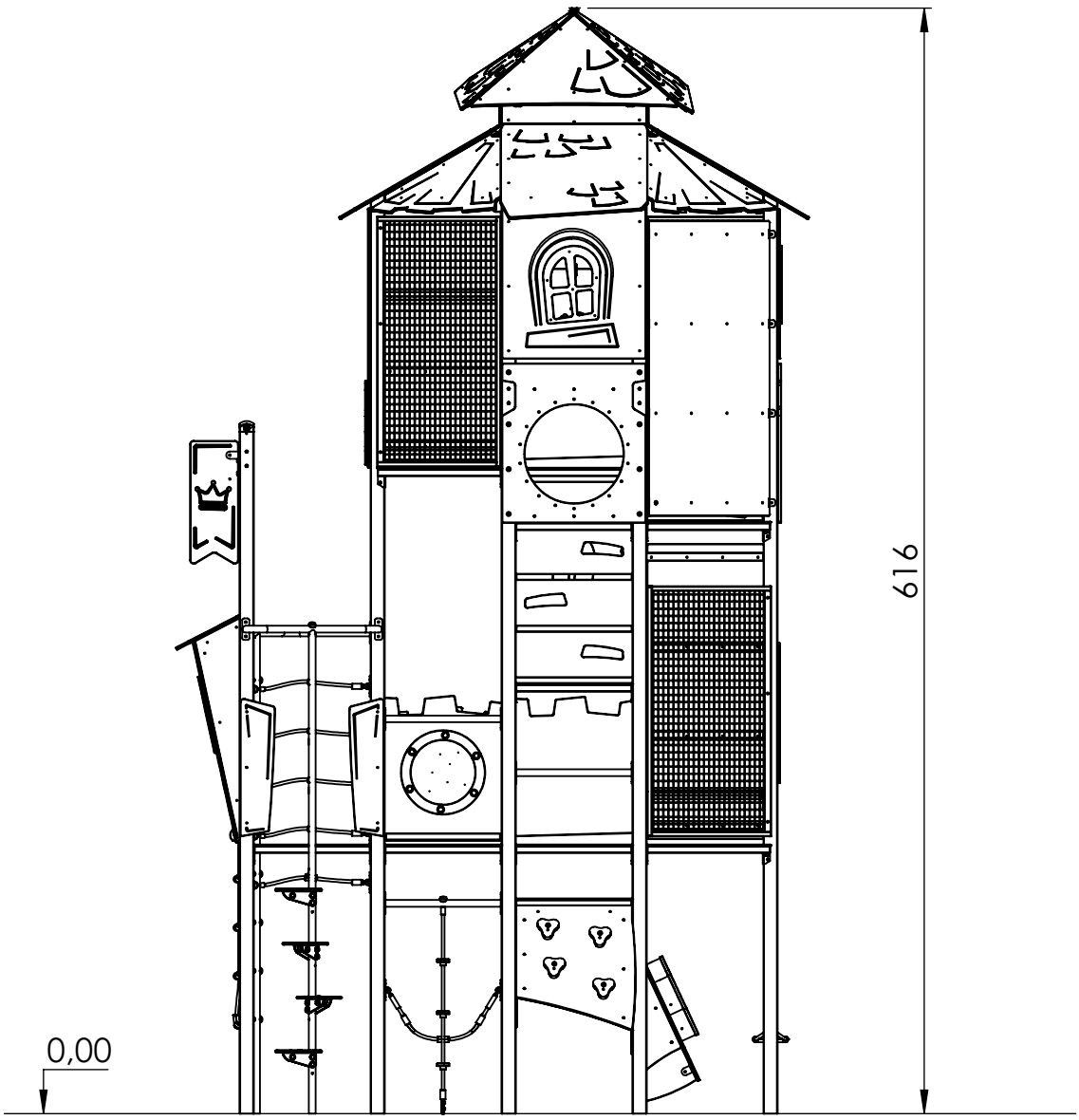

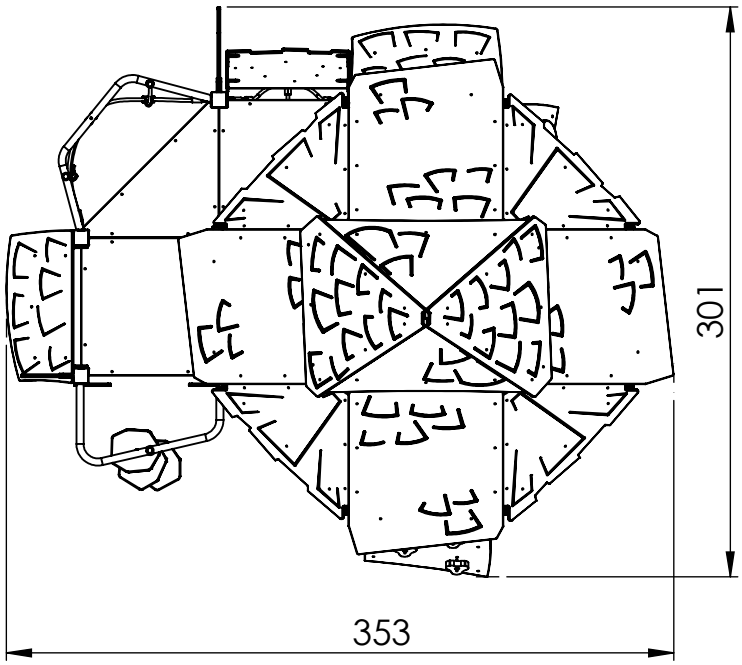

[cm]

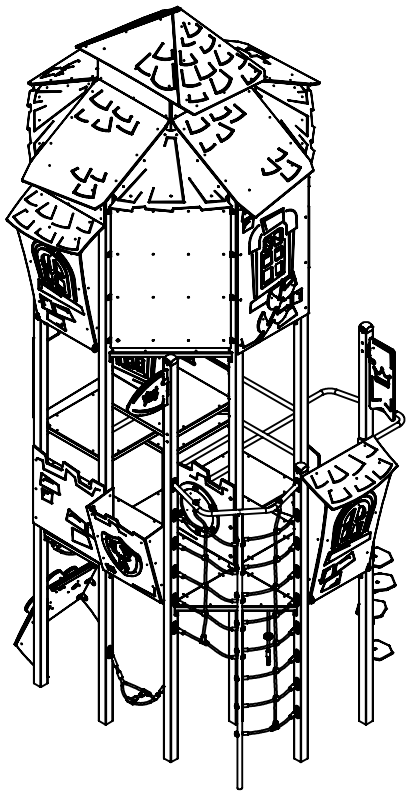

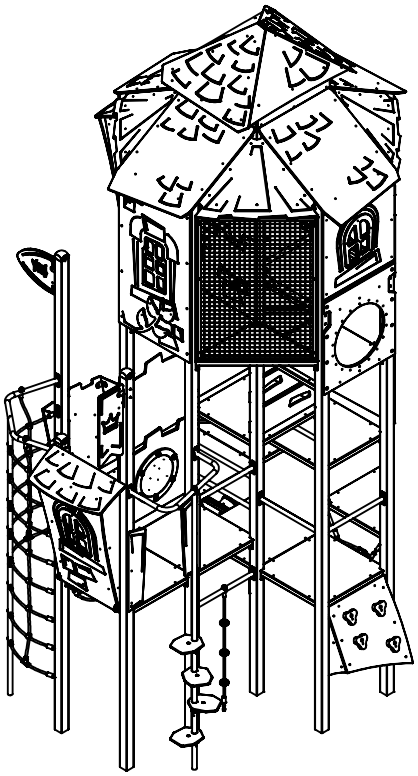

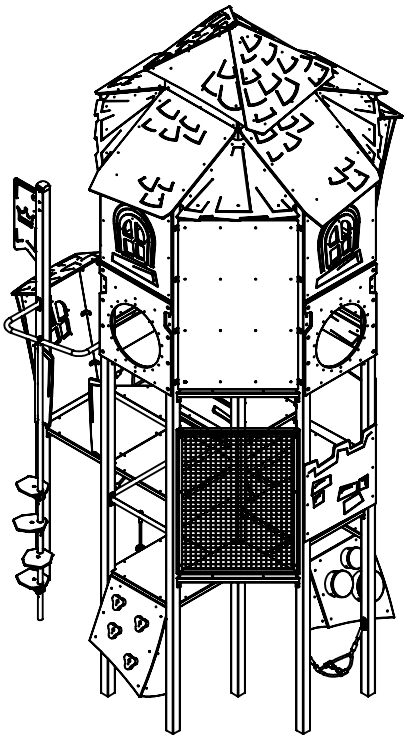

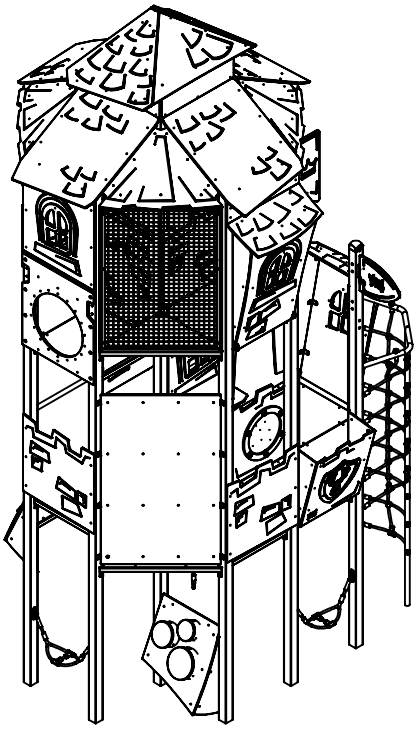

[cm]

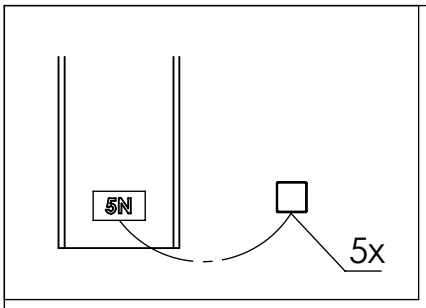
5N
5x

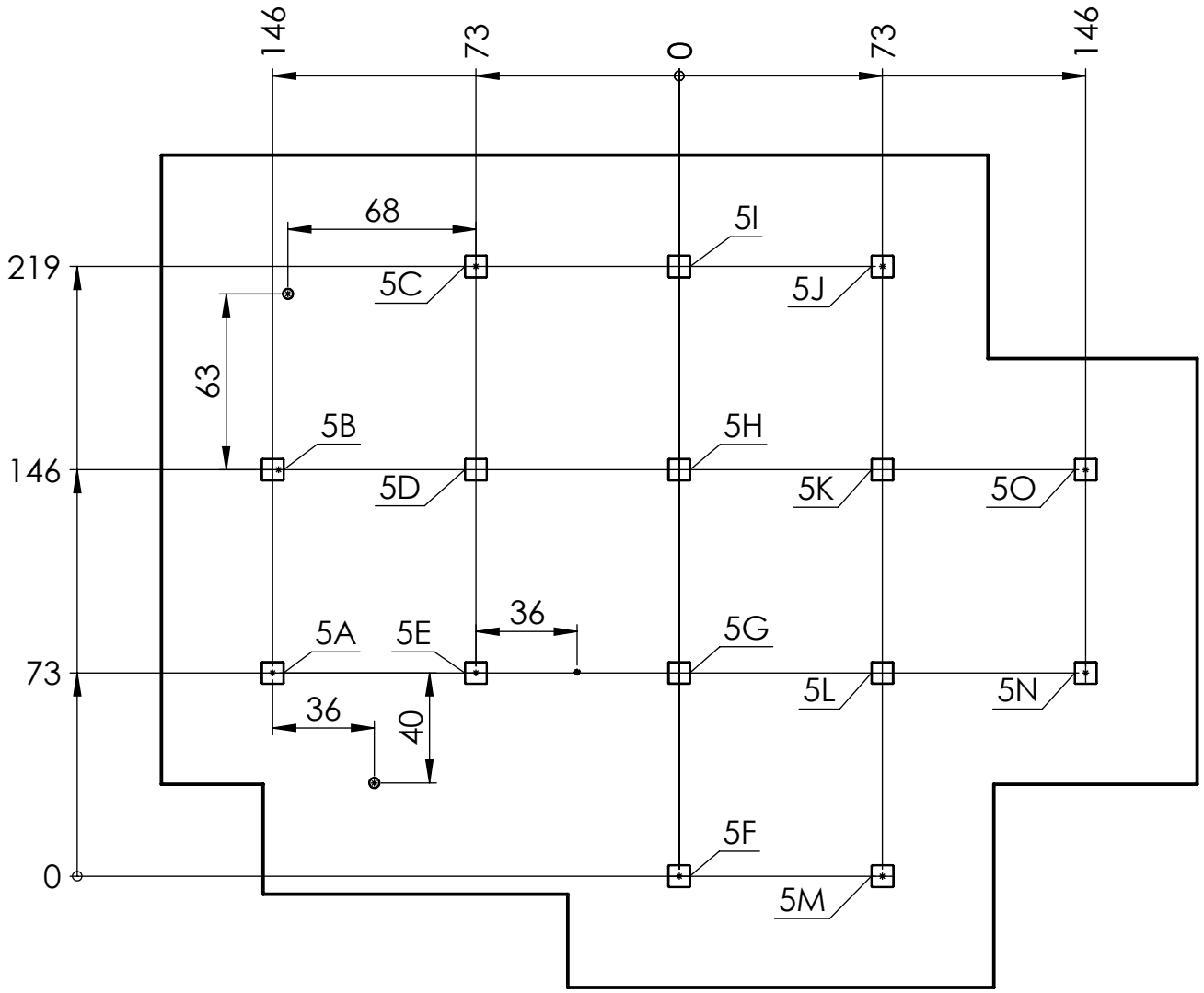
146
73
0
73
146
68
5I
219
5C
5J
63
5B
5H
146
5D
5K
5O
36
5A
5E
5G
73
5L
5N
36
40
5F
0
5M

[cm]

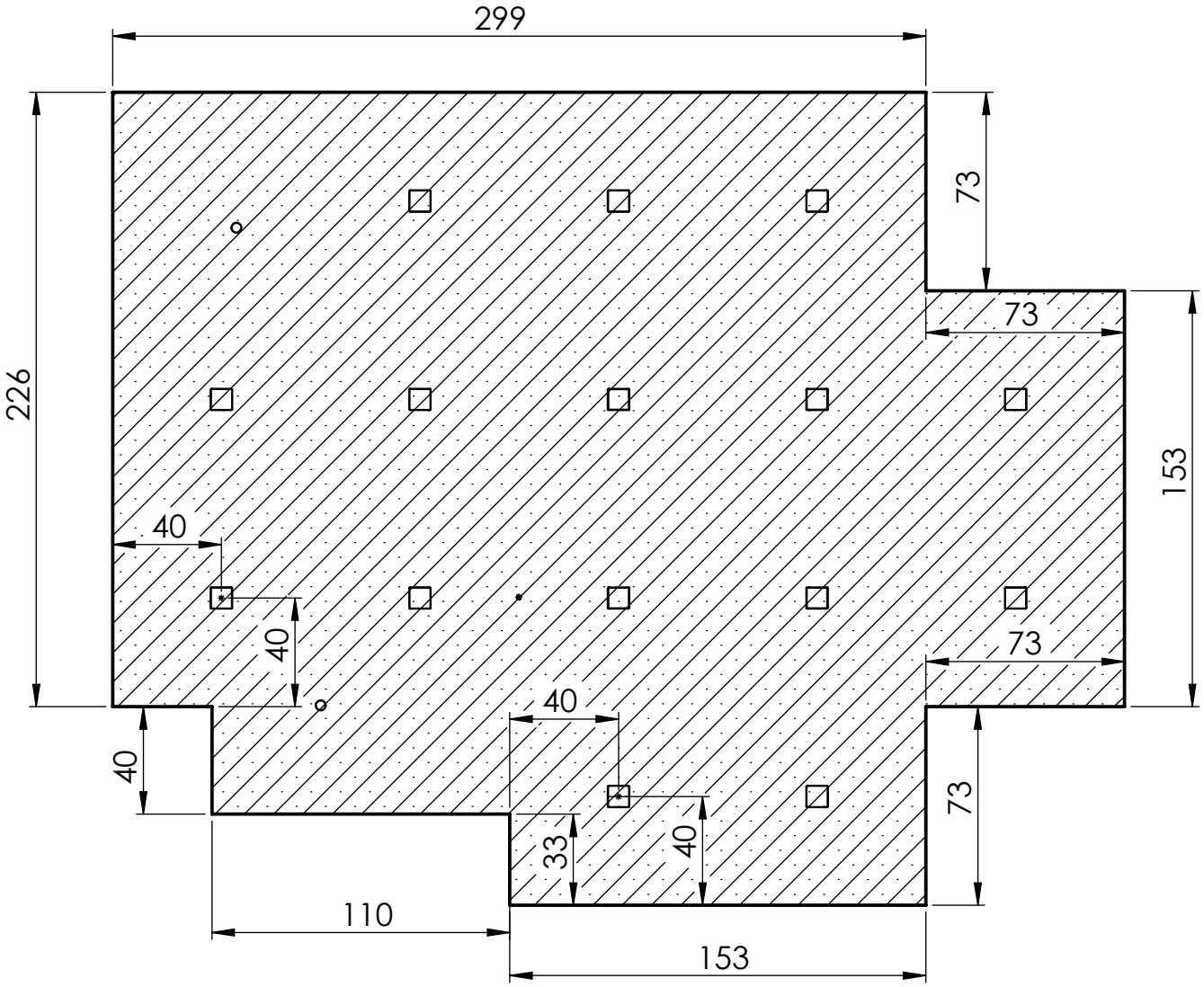

[cm]

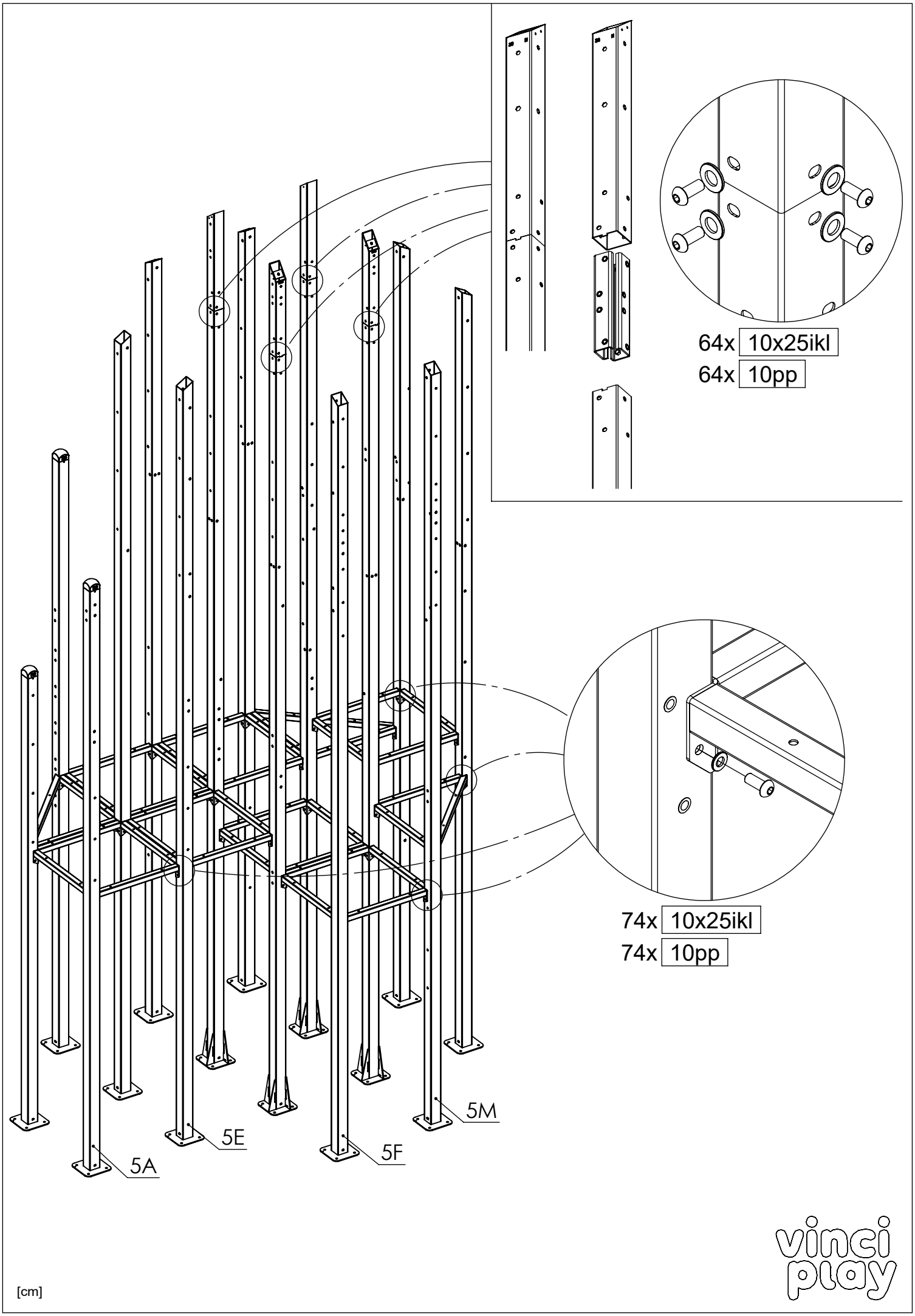
64x 10x25ikl
64x 10pp
74x 10x25ikl
74x 10pp
5A
5E
5F
5M
[cm]
vinci play

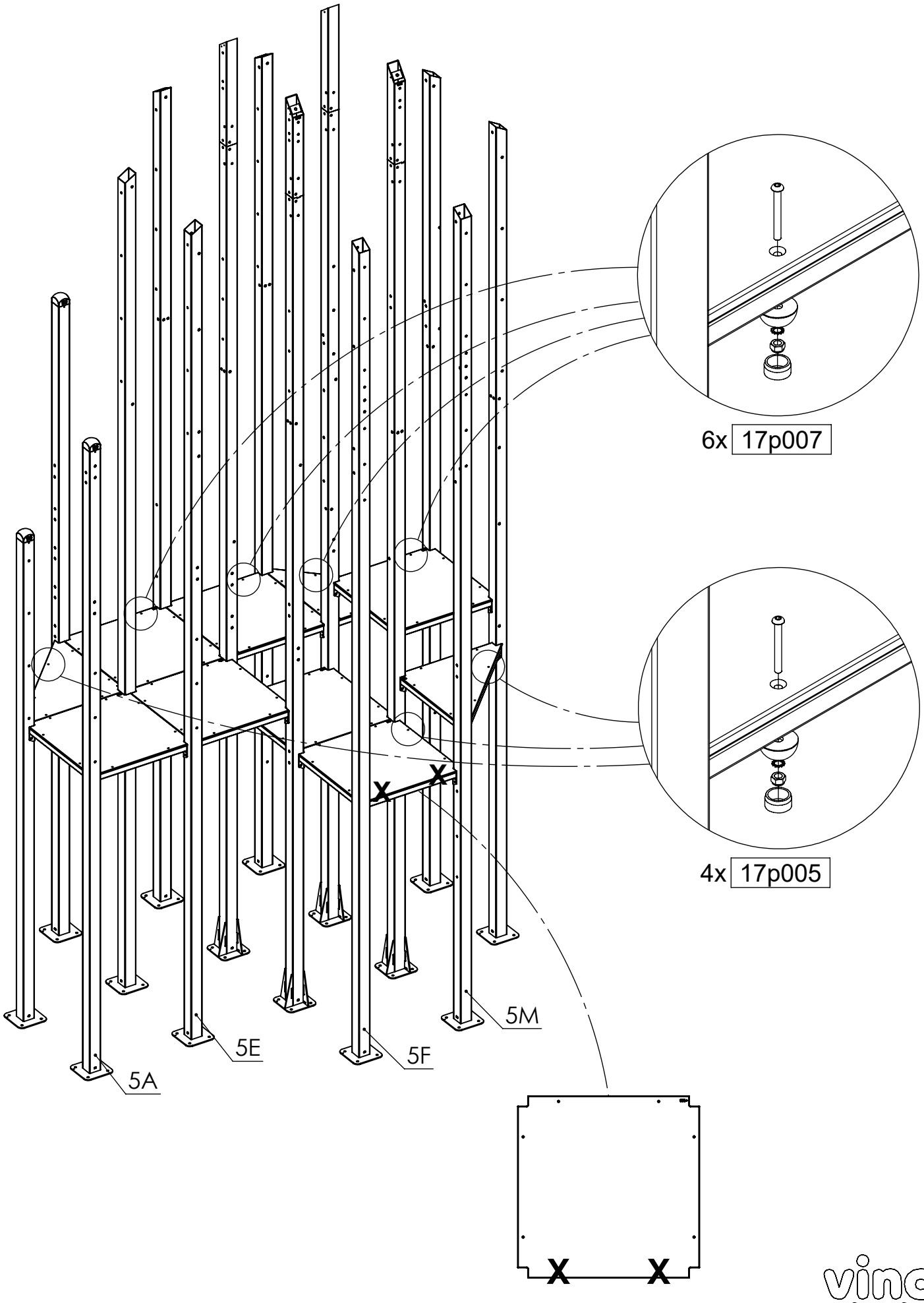

[cm]

vinci play

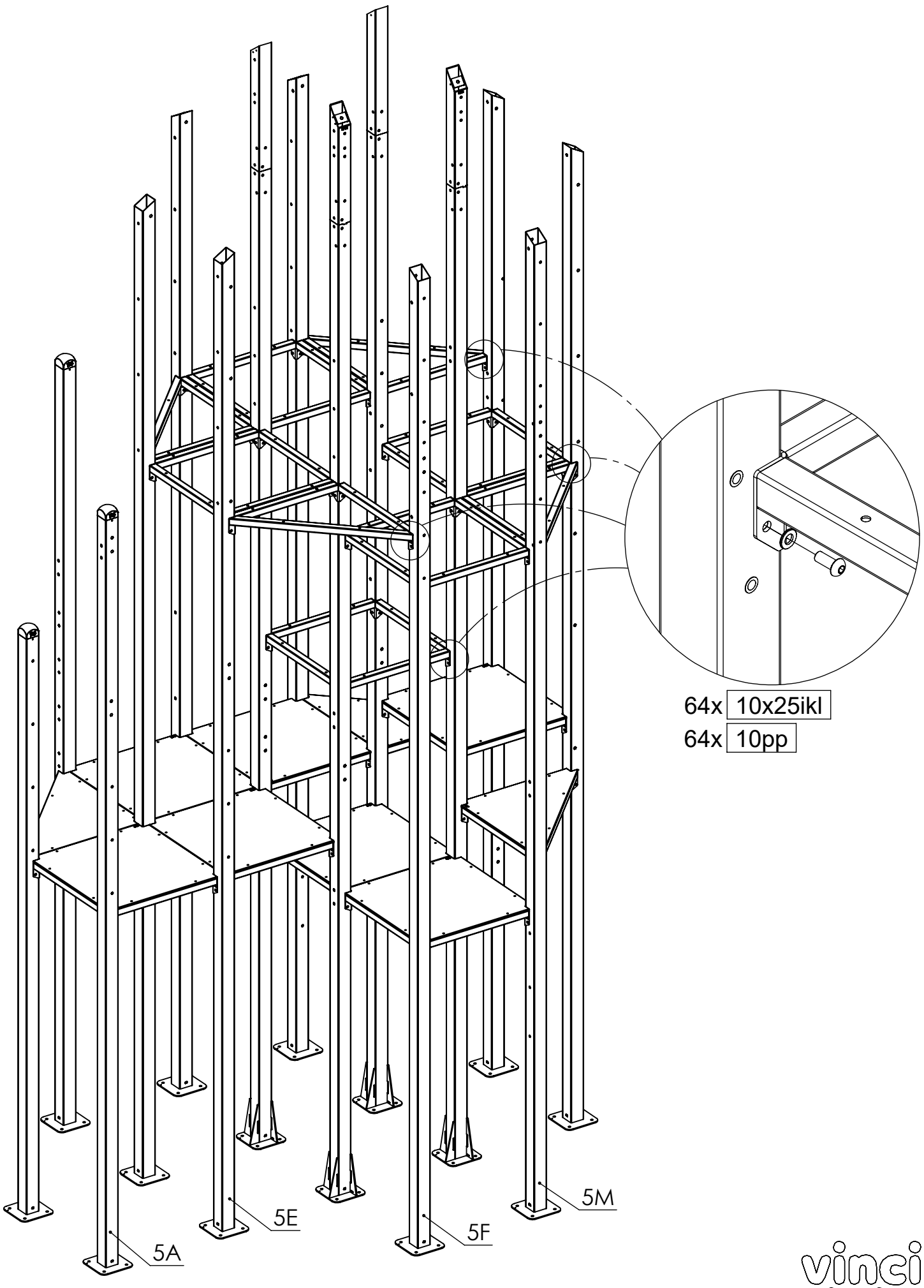

[cm]

vinci play

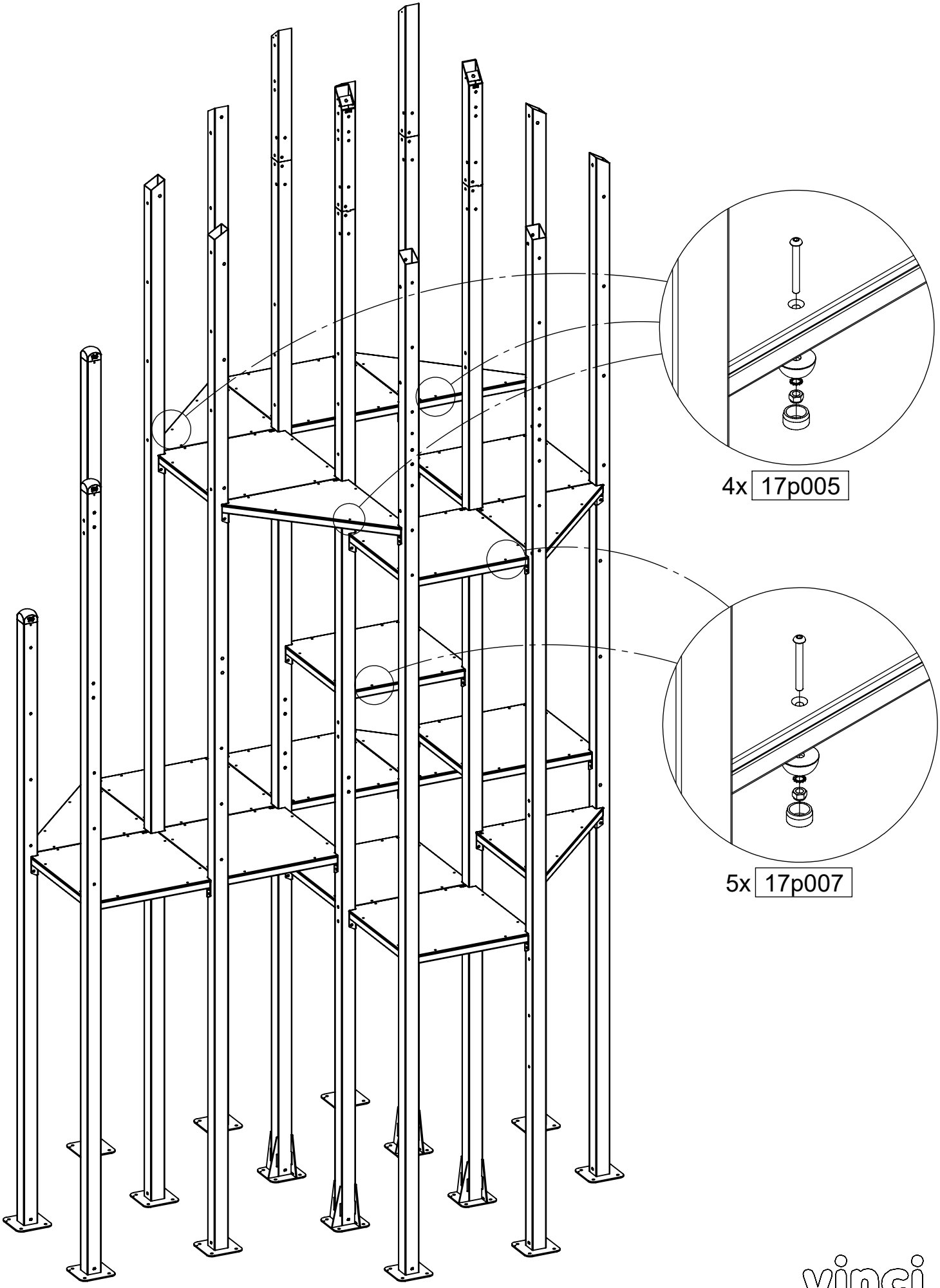

[cm]

vinci play

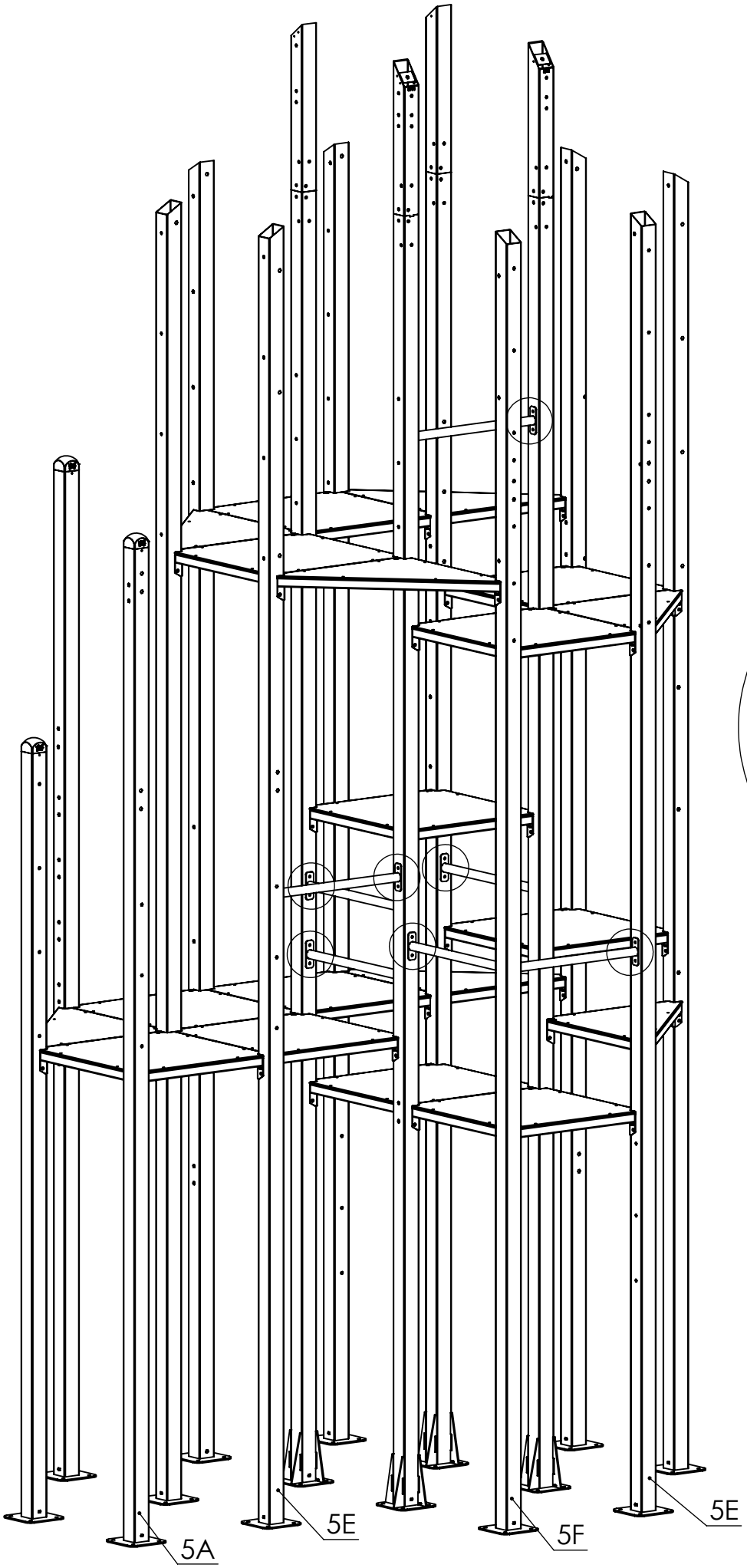

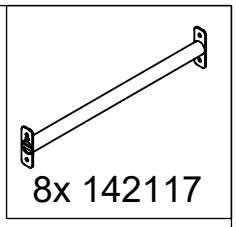

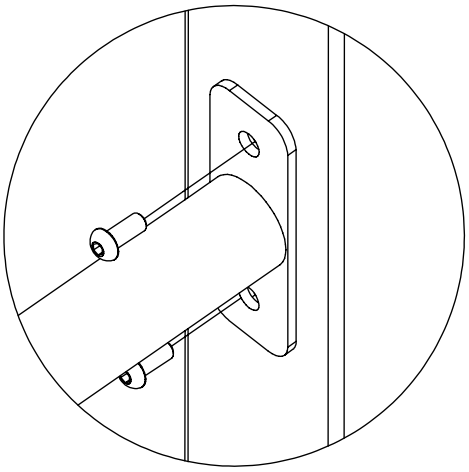

[cm]

vinci play

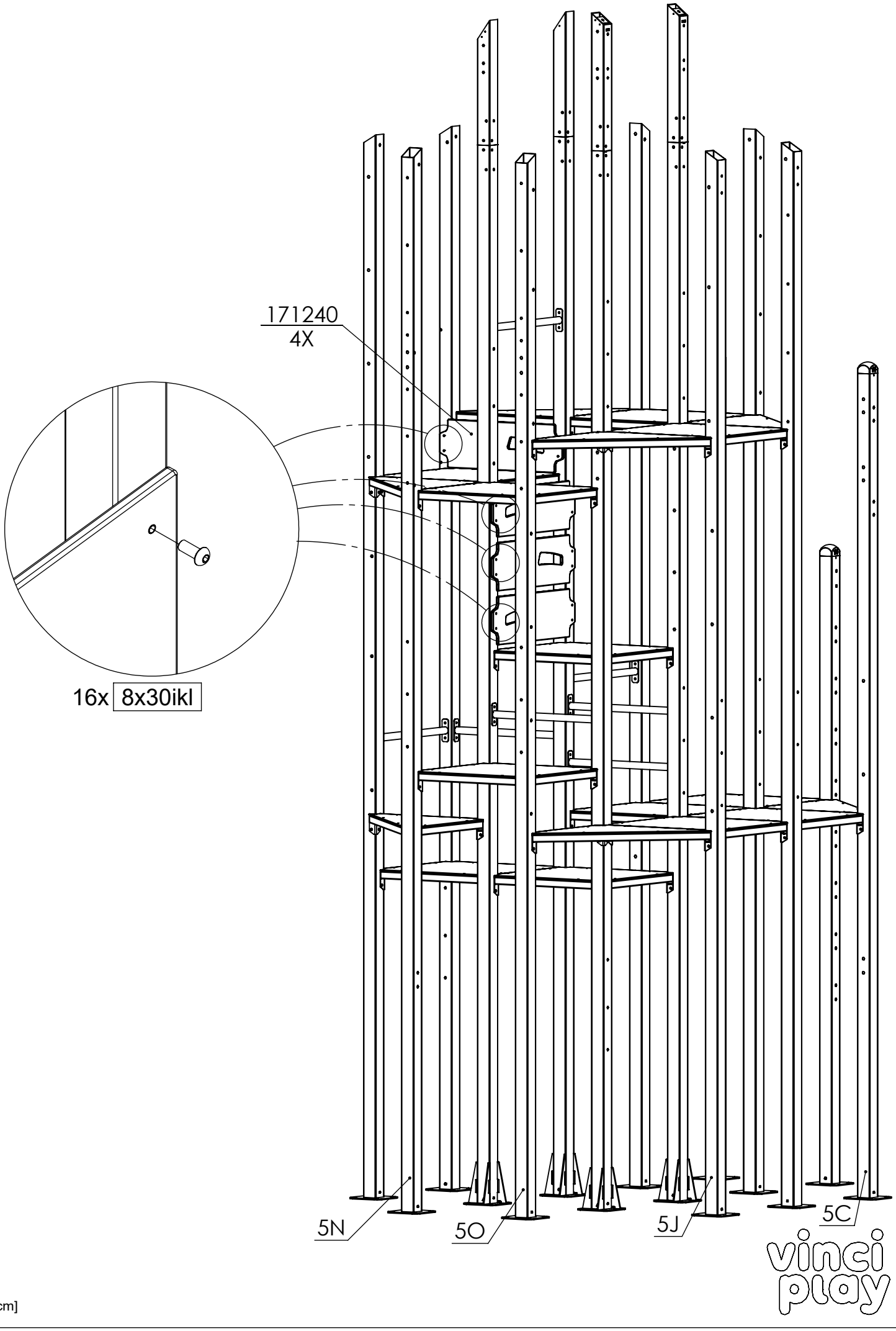
171240
4X
16x 8x30ikl
5N
5O
5J
5C
vinci play
[cm]

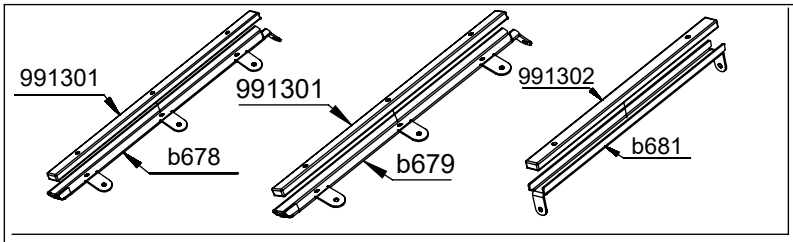

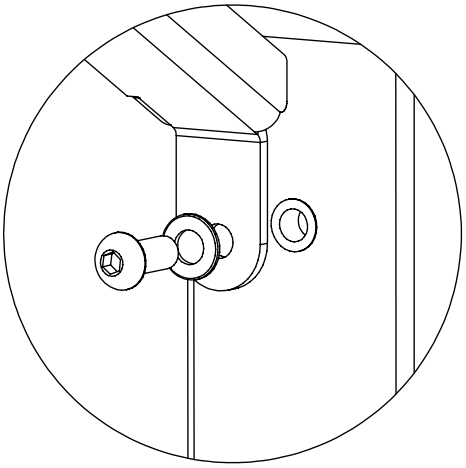

16x 10x25ikl
16x 10pp

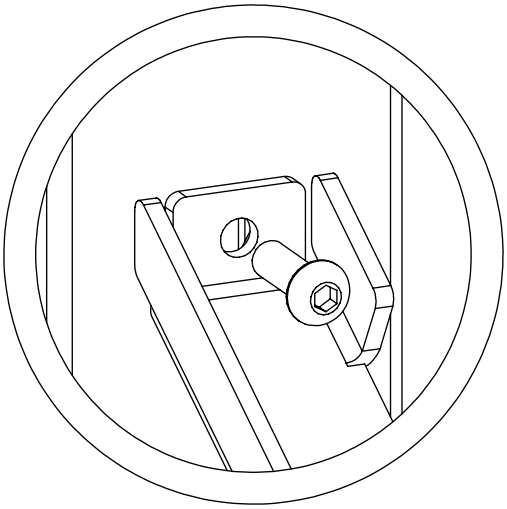

8x 8x25ikl

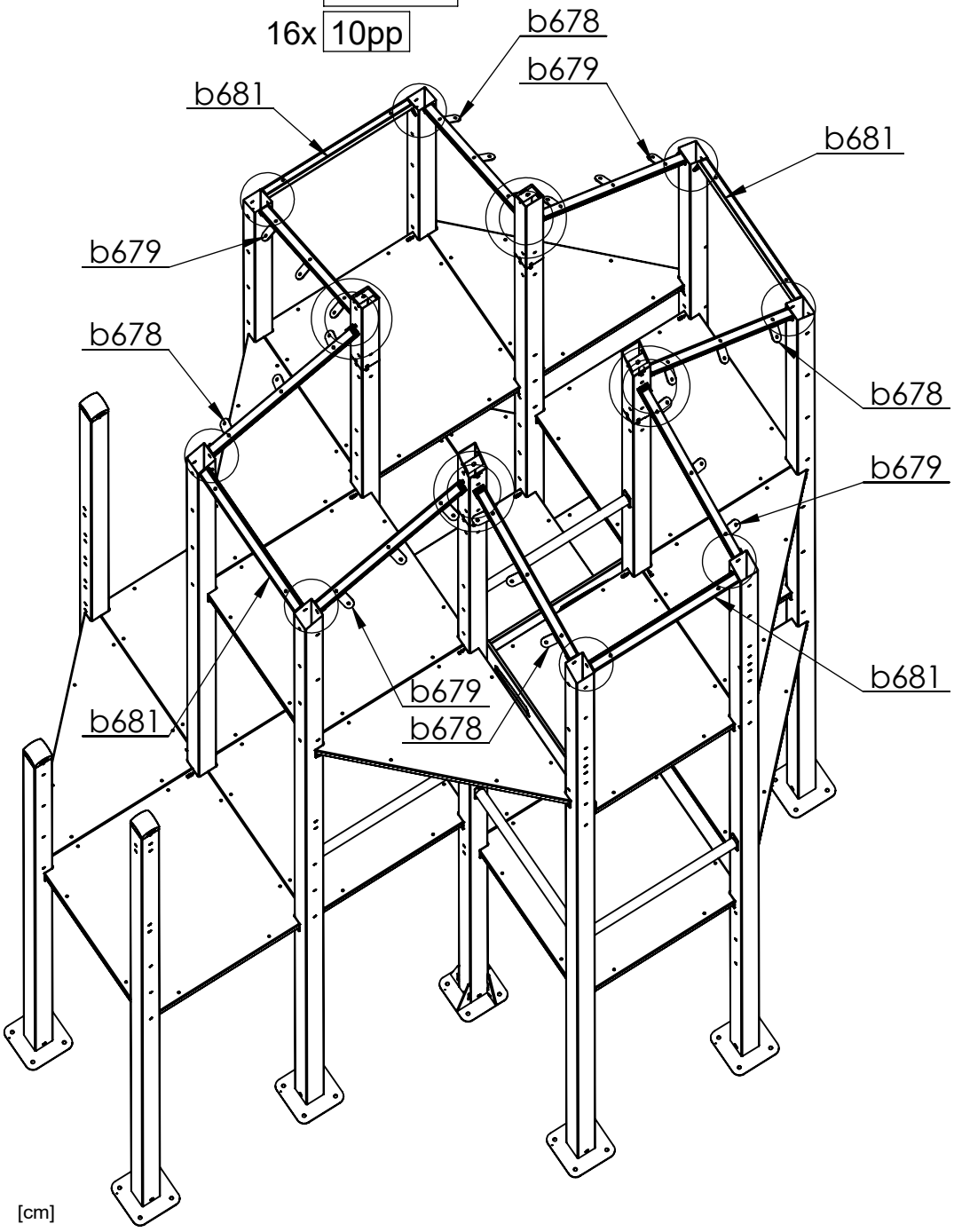

[cm]

vinci play

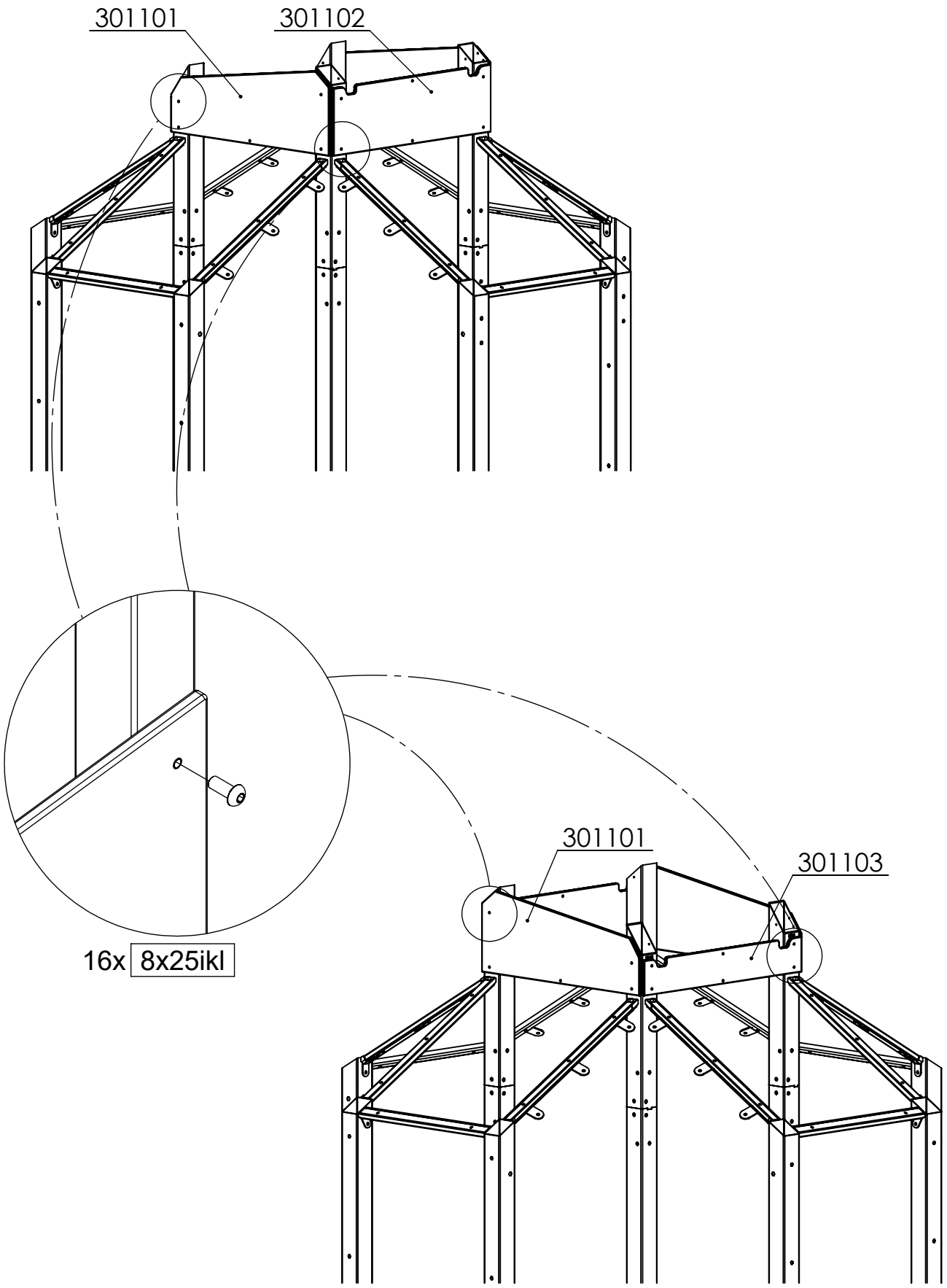

[cm]

vinci play

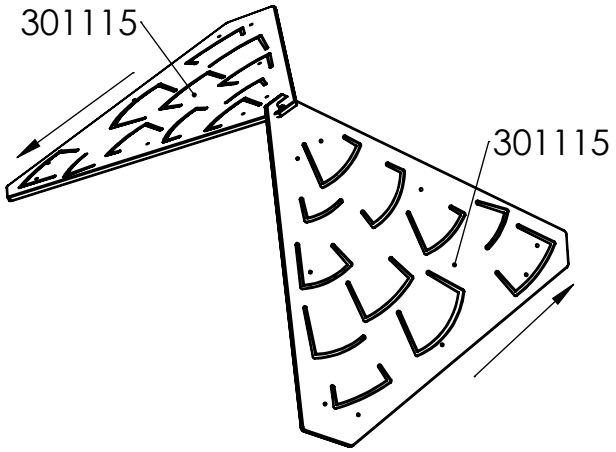

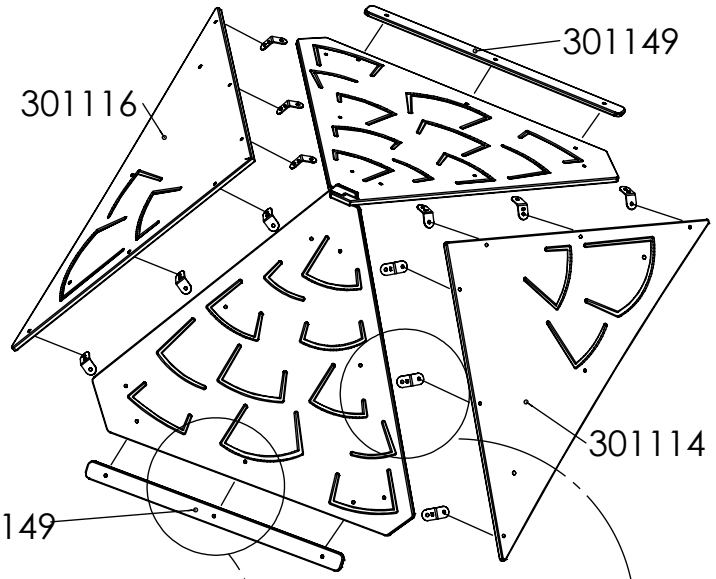

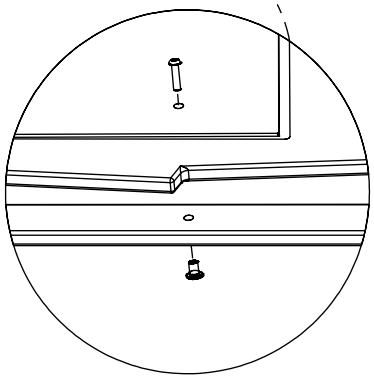

2x 30c152

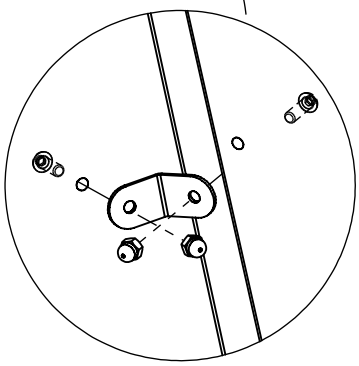

1x 30c058

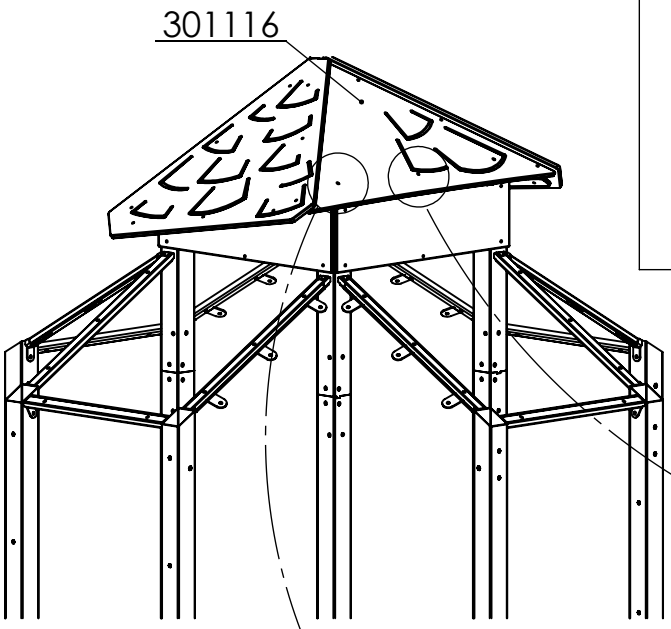

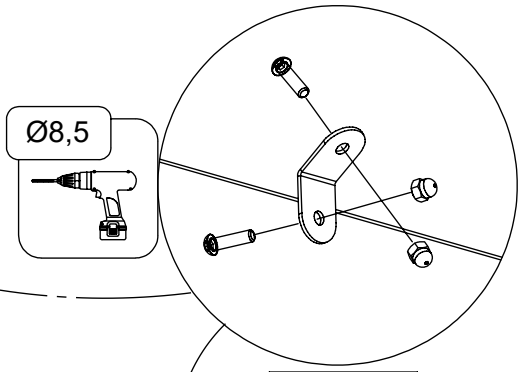

1x 30c154

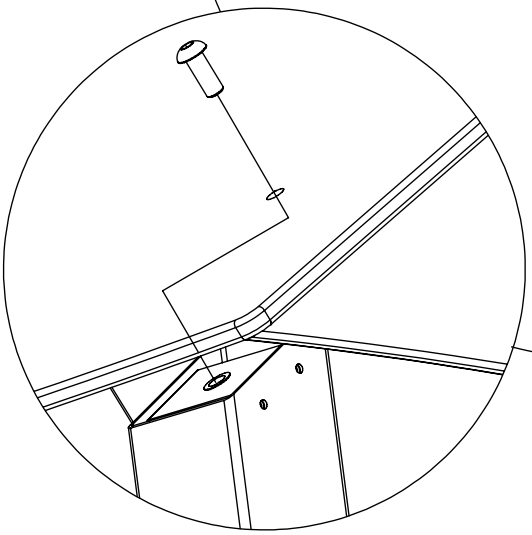

4x 10x30ikl

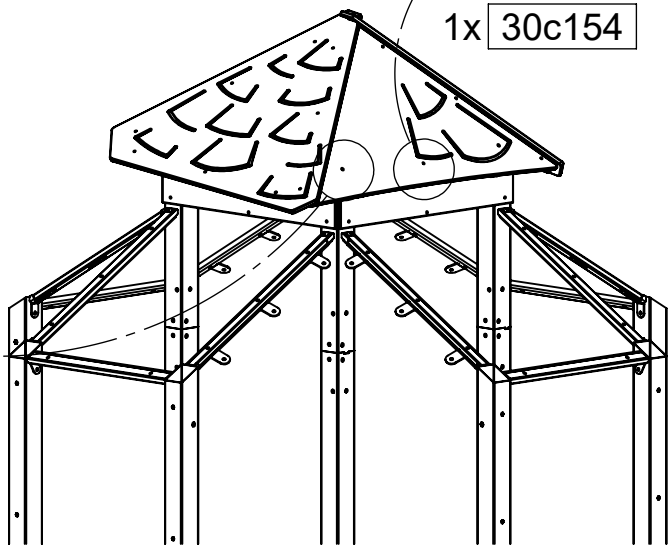

[cm]

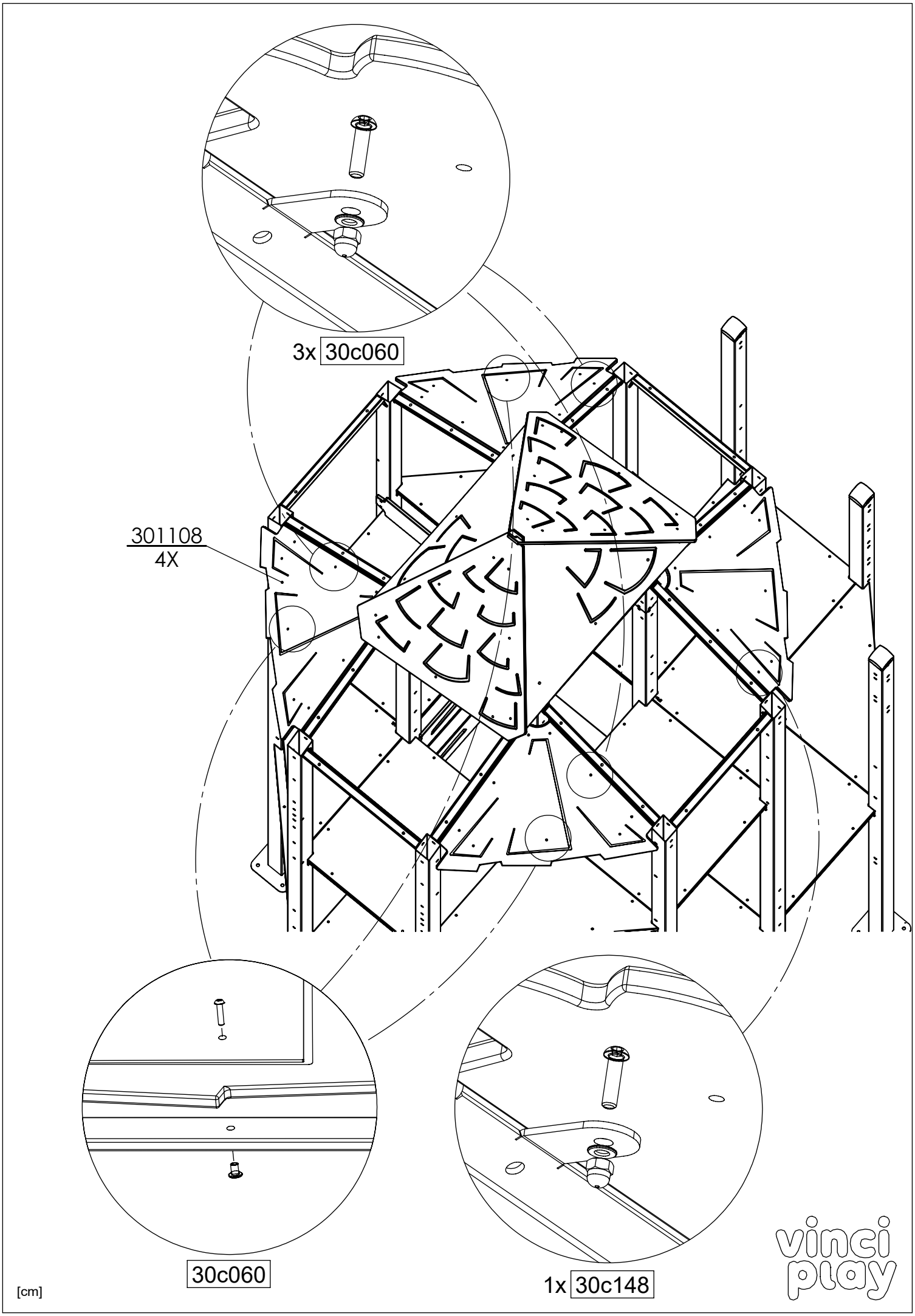
3x 30c060
301108
4X
30c060
1x 30c148
[cm]
vinci play

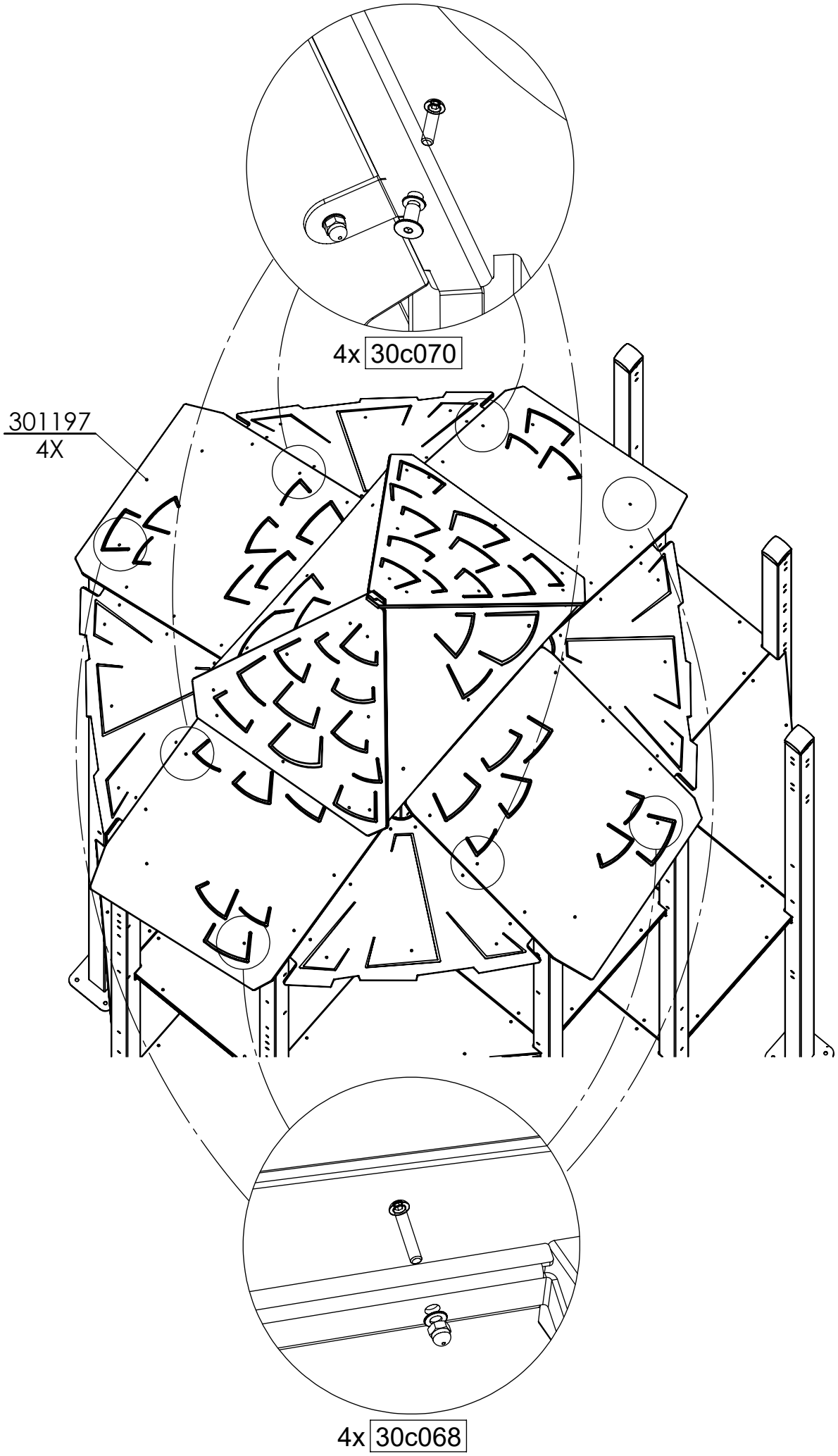

[cm]

vinci play

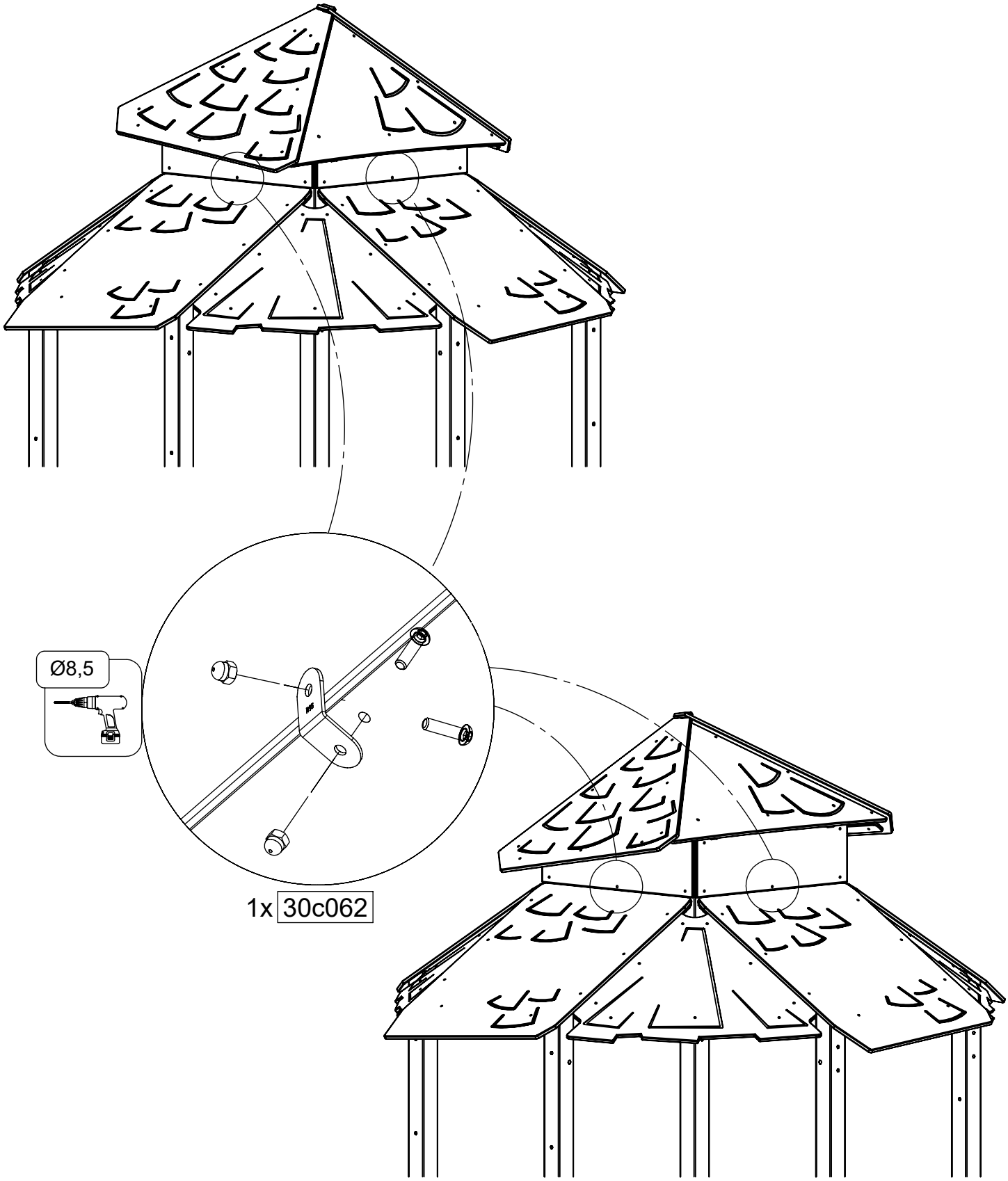

[cm]

vinci play

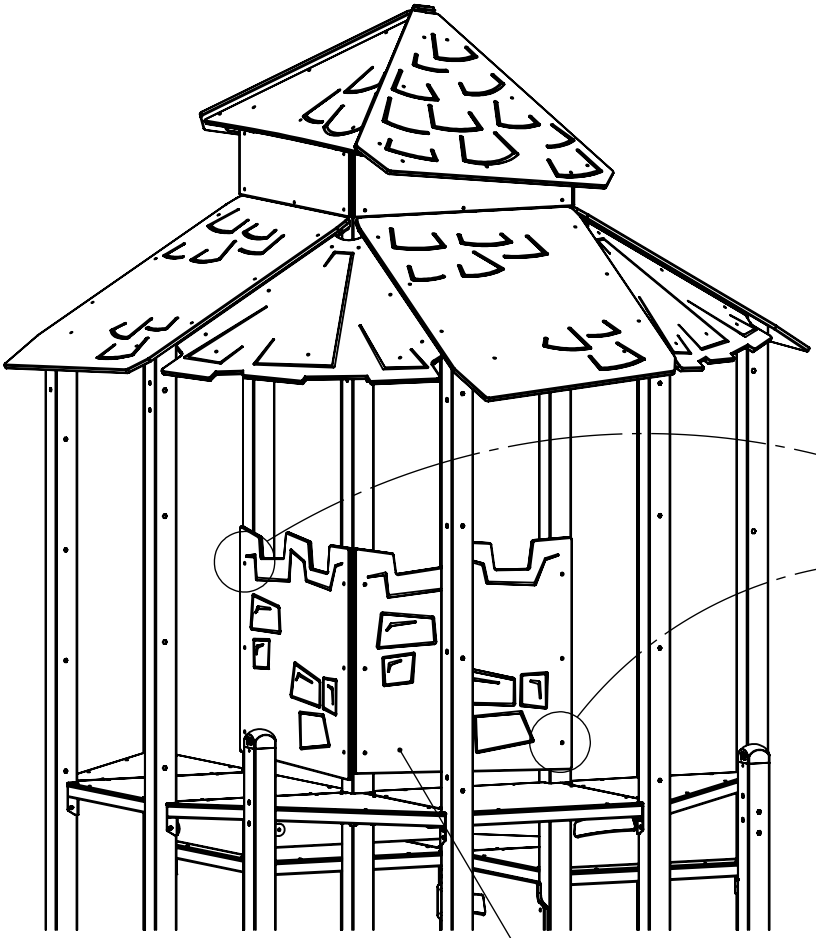

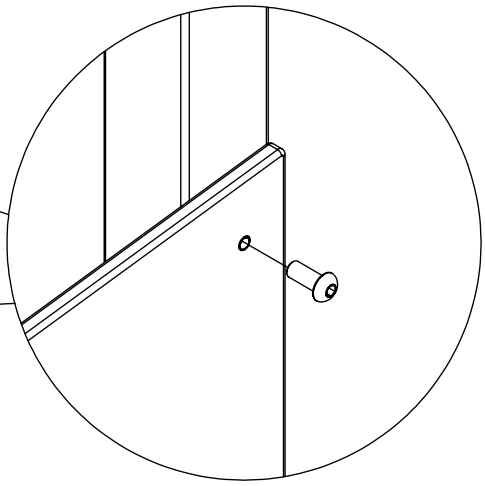

12x 8x25ikl

301126
2X

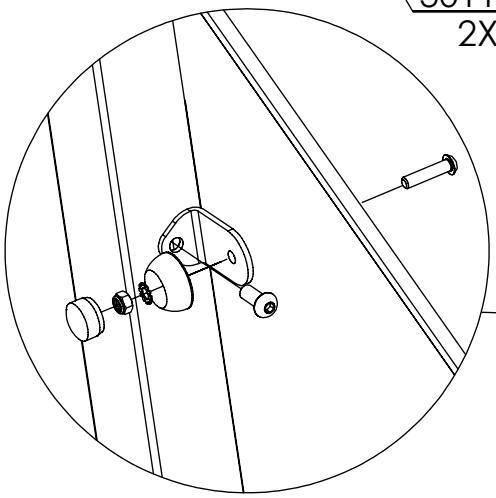

1x 17e111

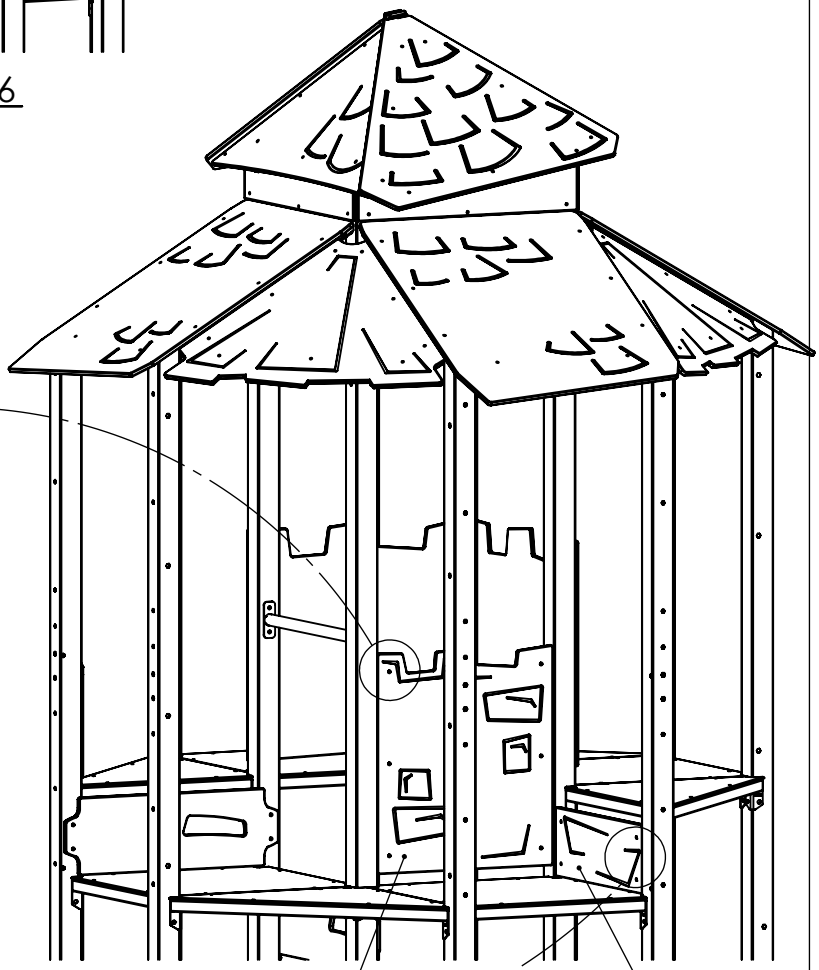

301132

301159

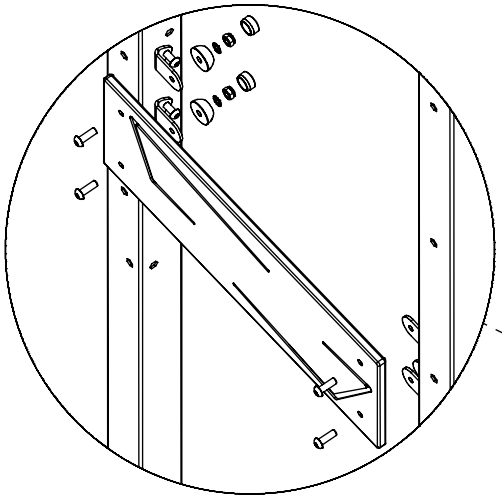

1x 17c004

[cm]

vinci play

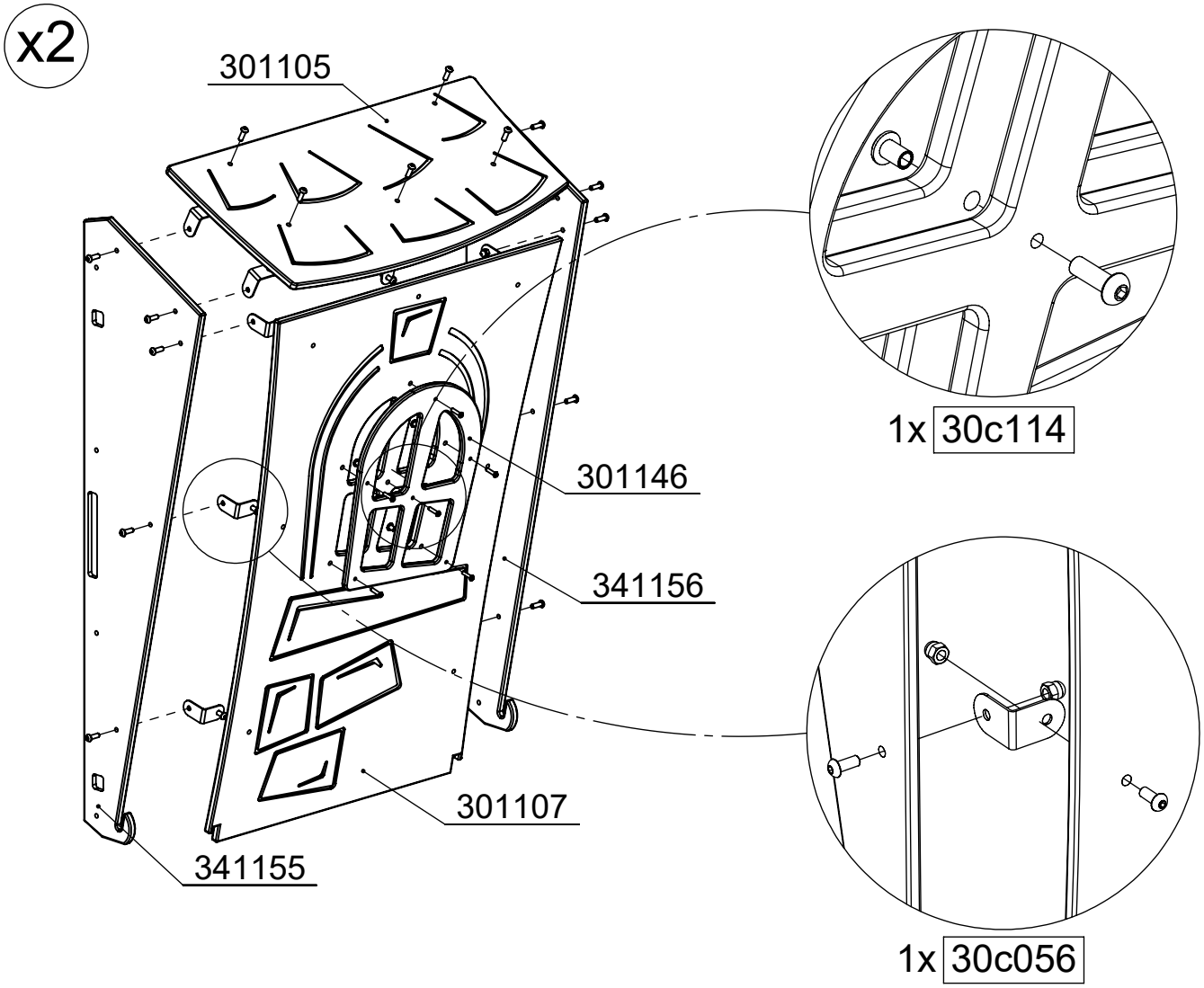
x2
301105
301146
341156
301107
341155
1x 30c114
1x 30c056

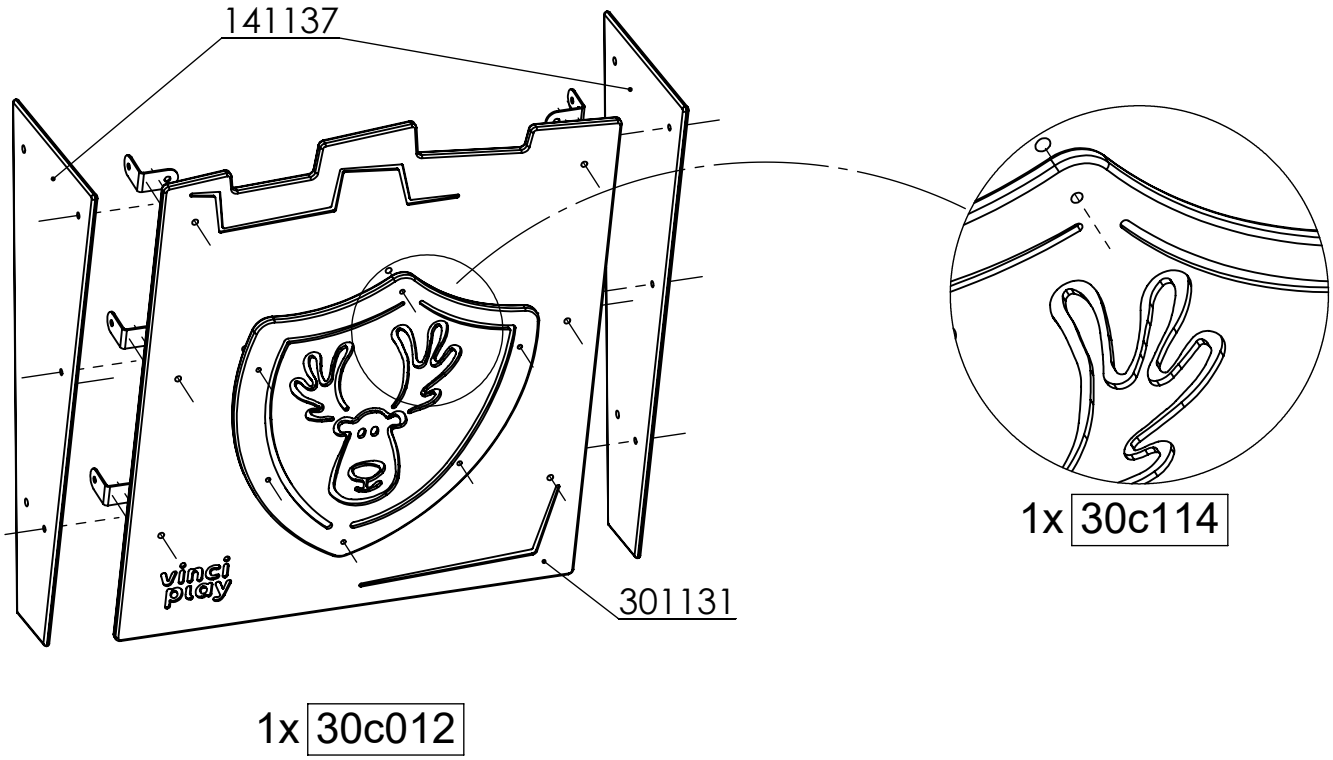
141137
301131
vinci play
1x 30c114
1x 30c012

[cm]

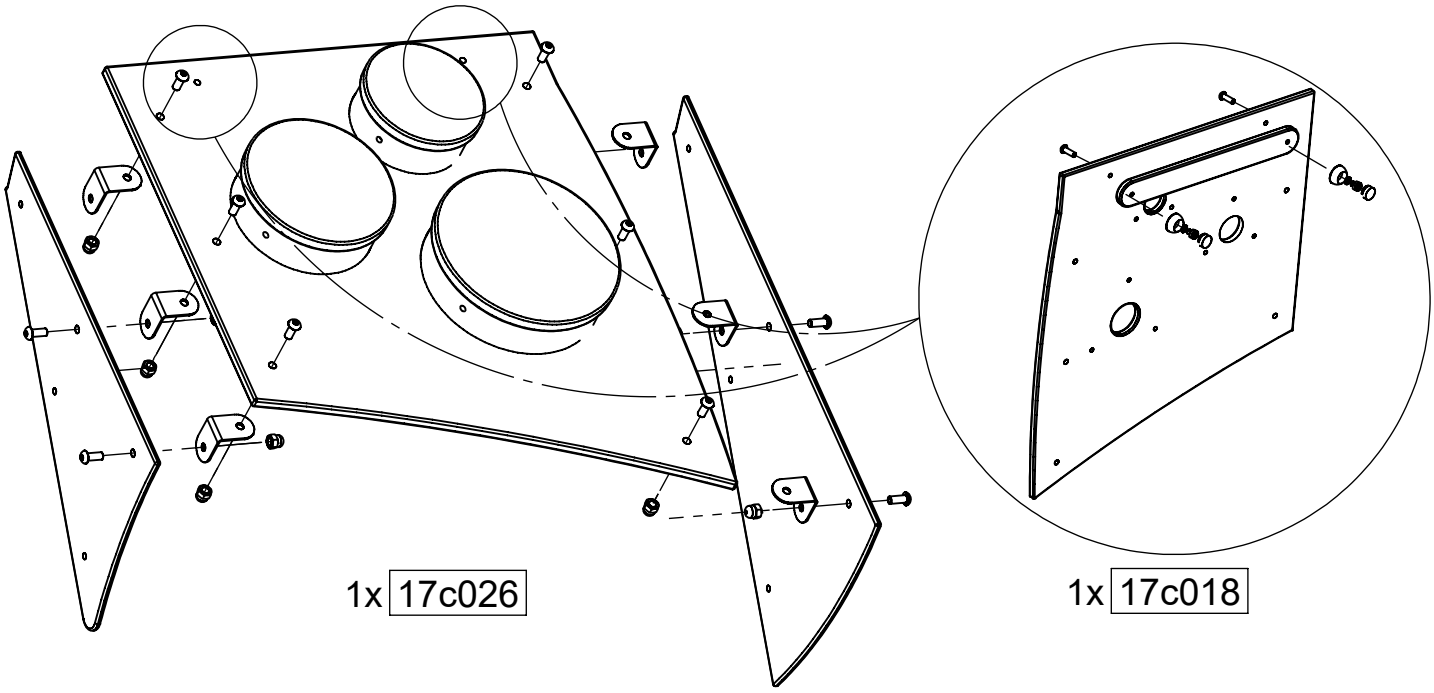

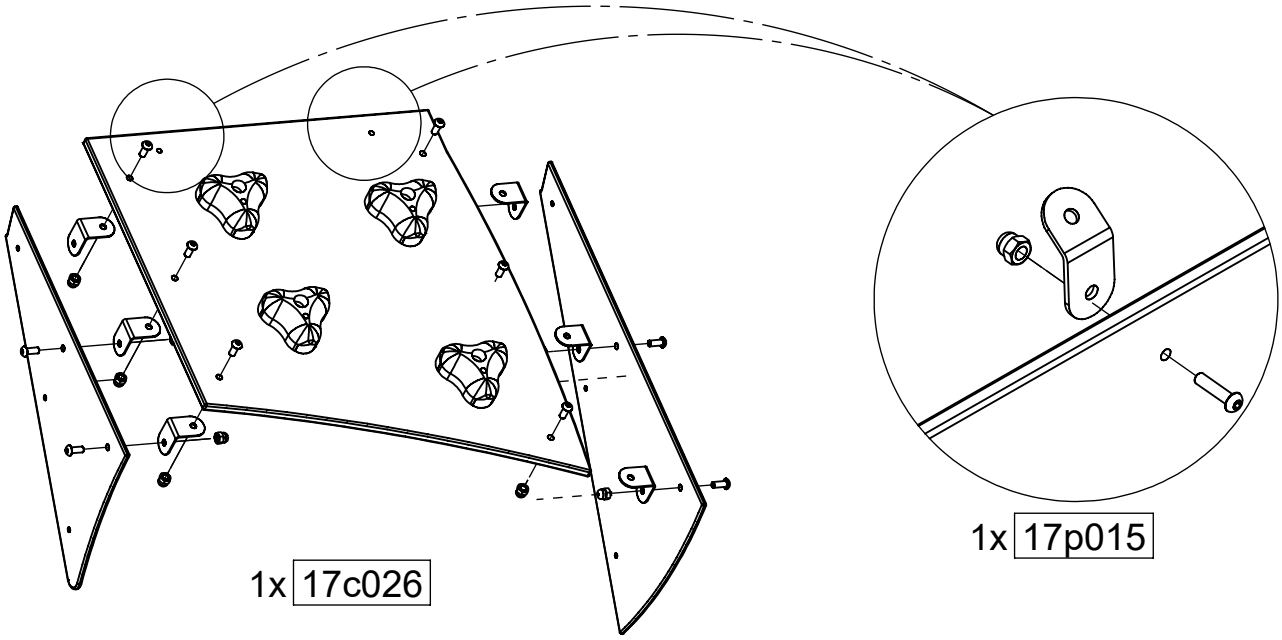

[cm]

x2

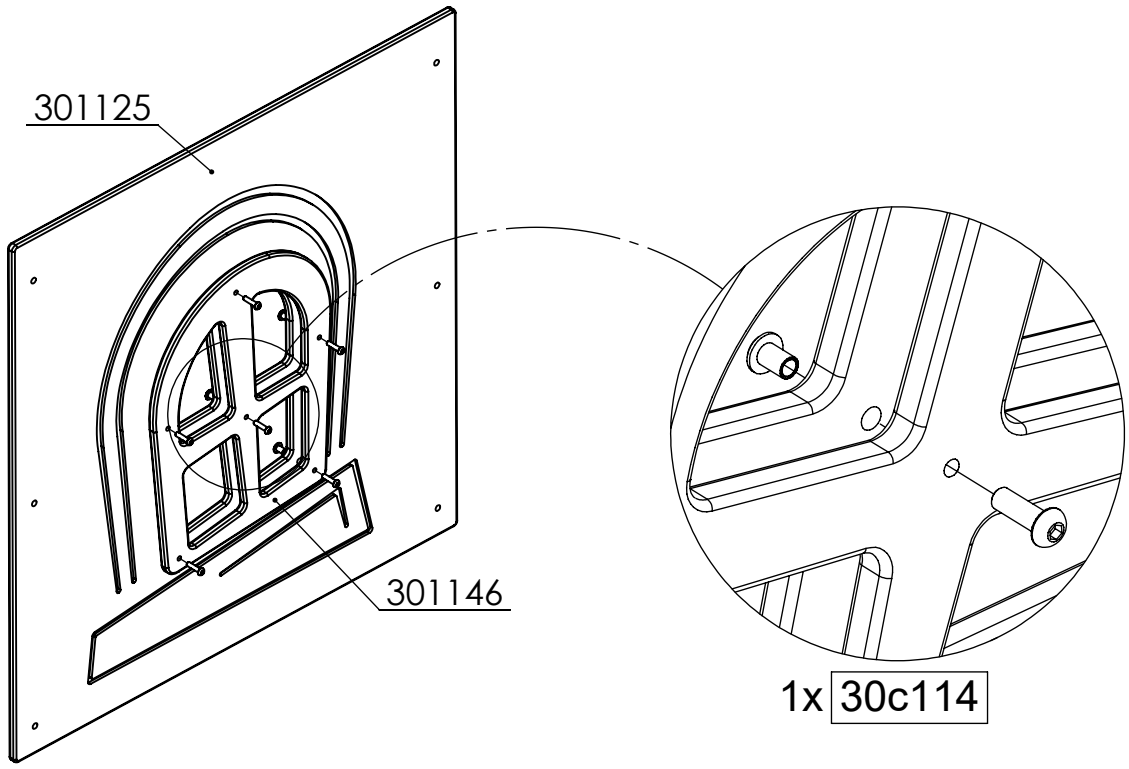

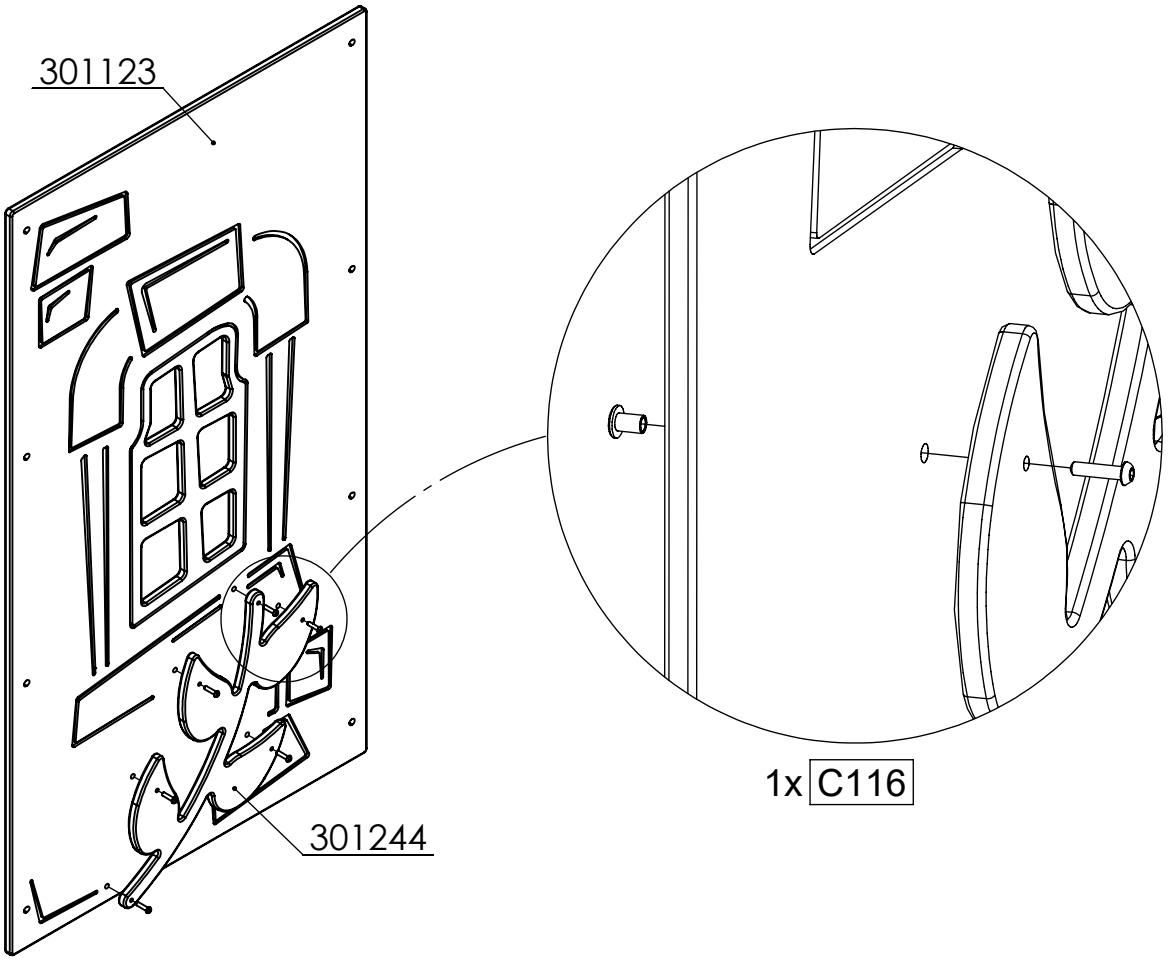

[cm]

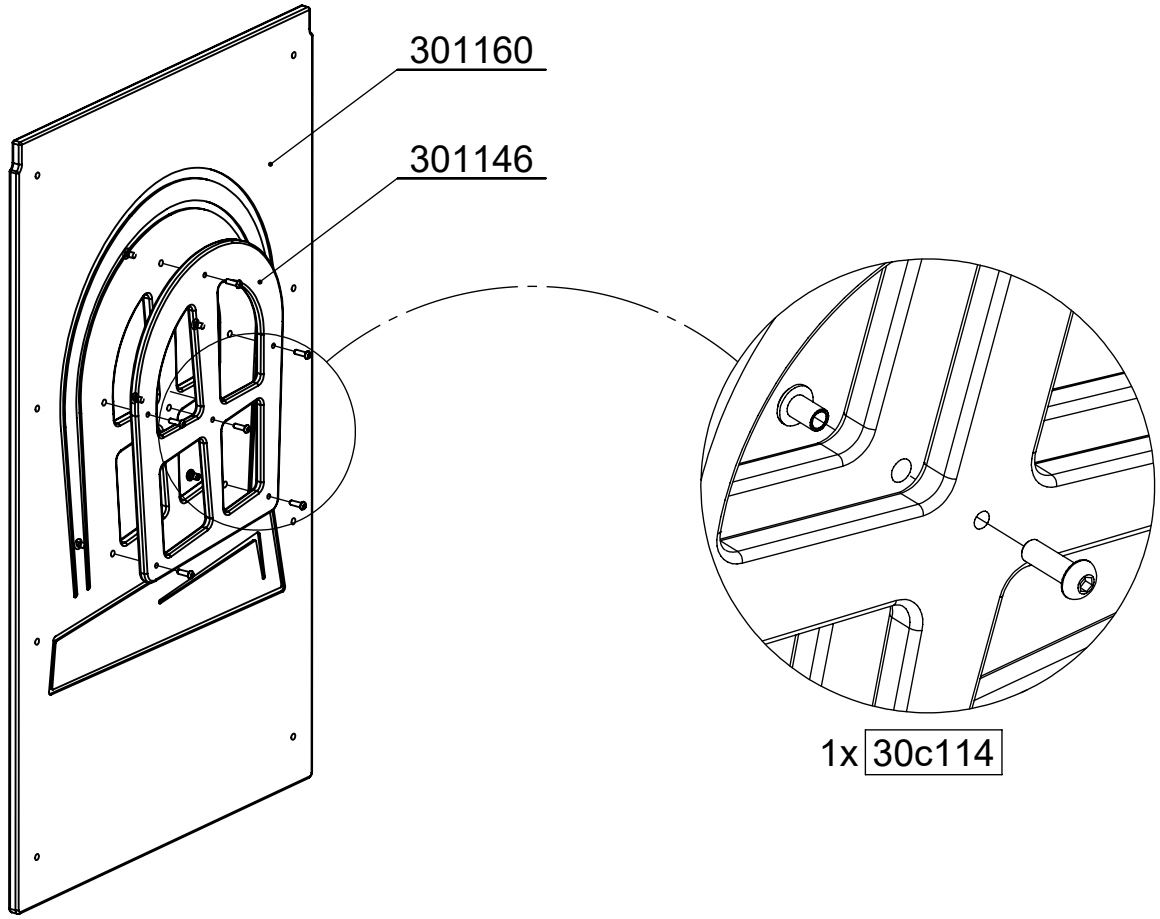

[cm]

vinci play

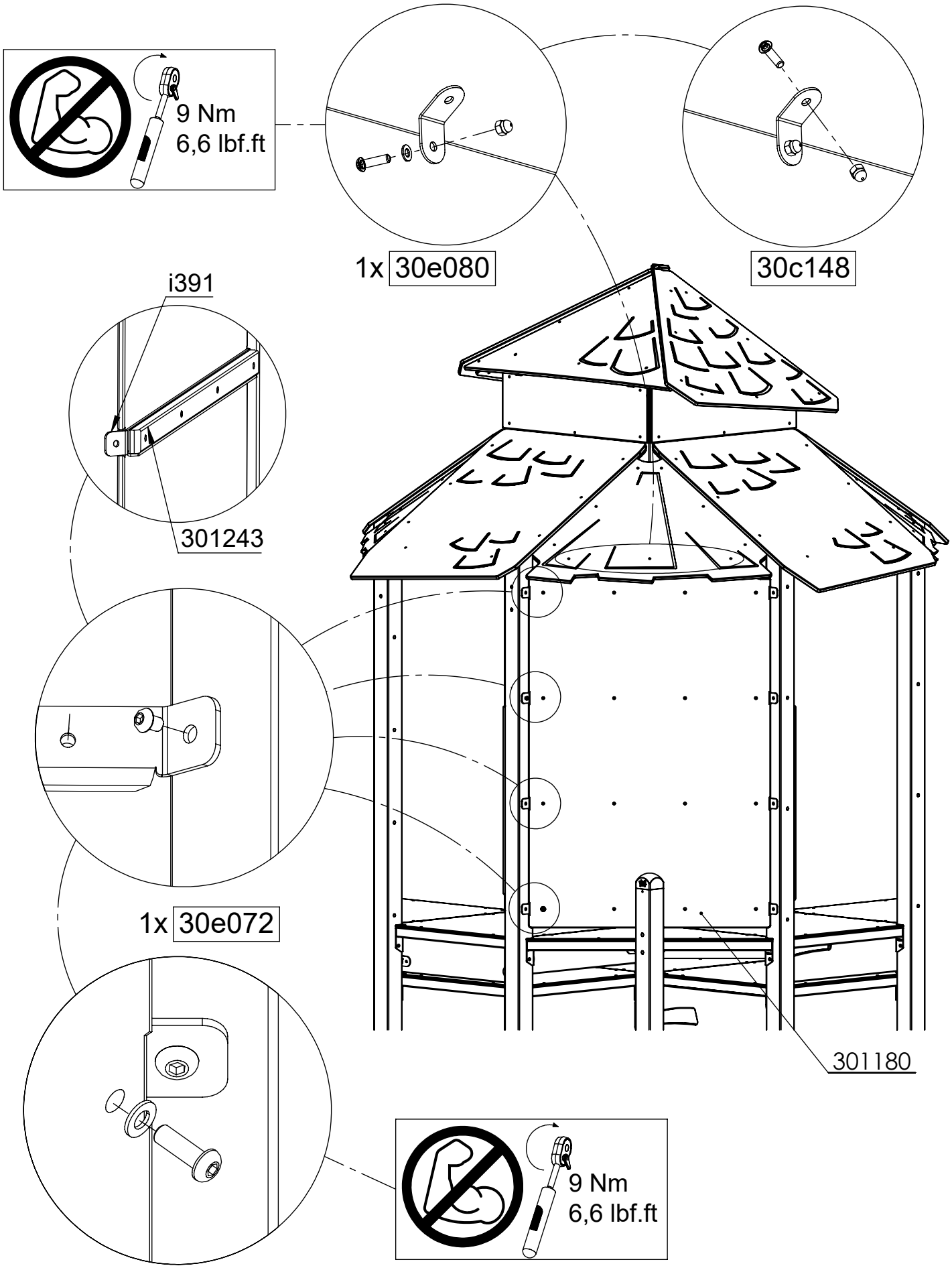

[cm]

vinci play

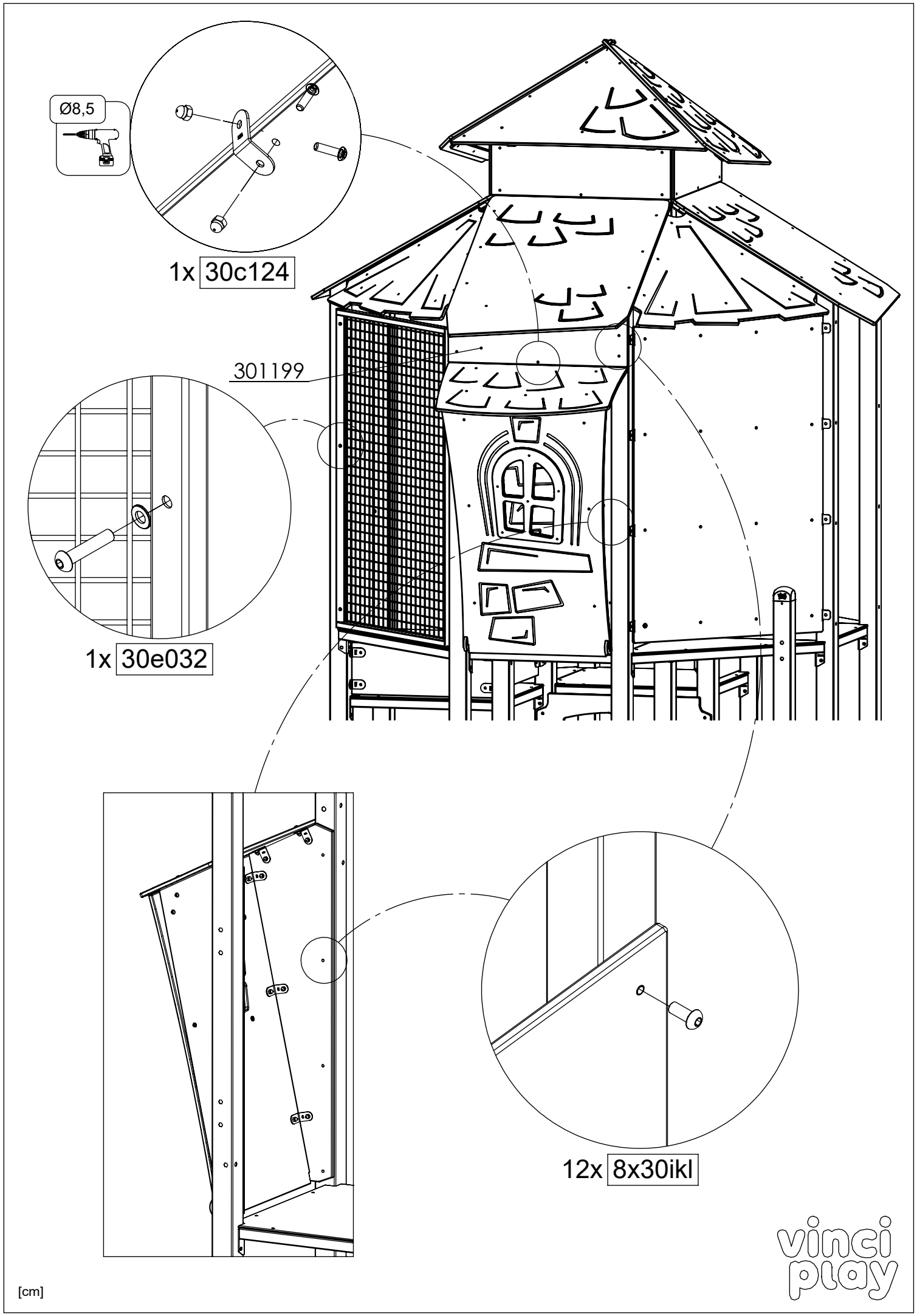
Ø8,5
1x 30c124
301199
1x 30e032
12x 8x30ikl
vinci play
[cm]

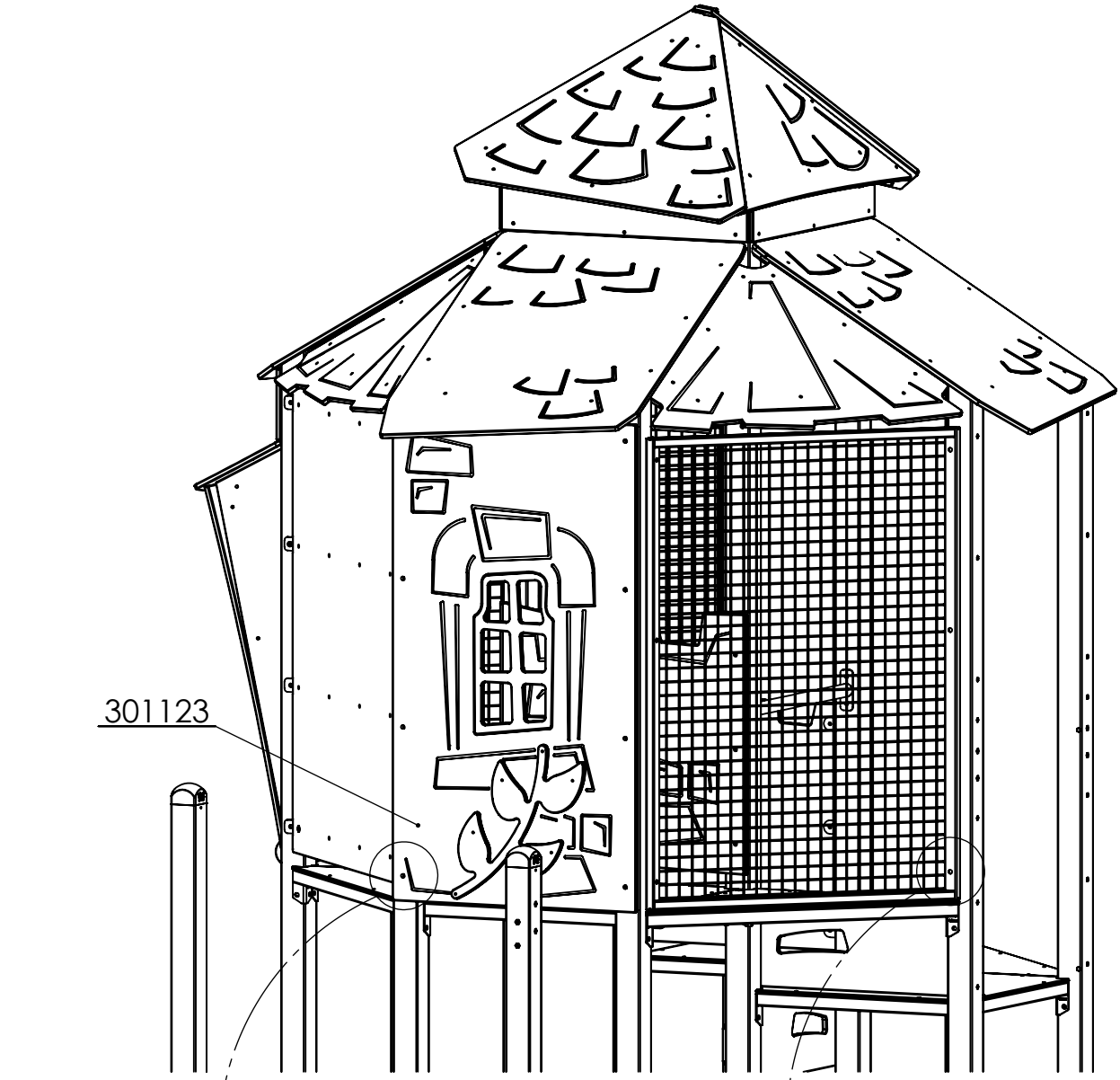

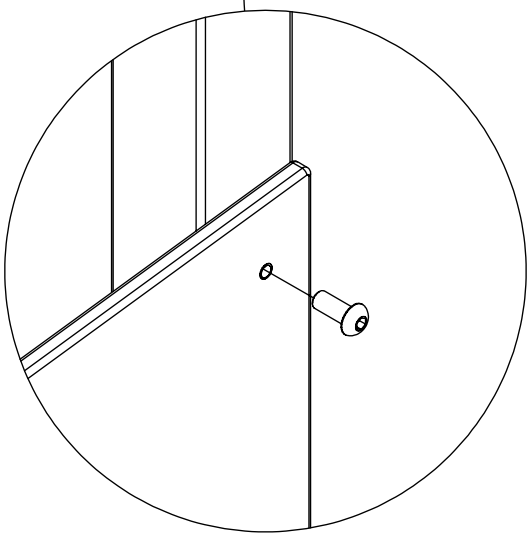

8x 8x30ikl

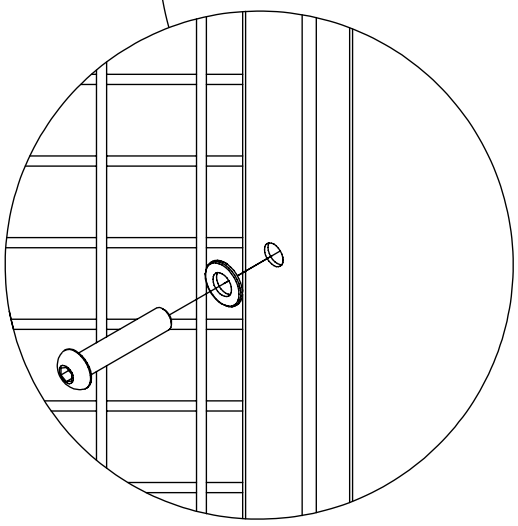

1x 30e032

[cm]

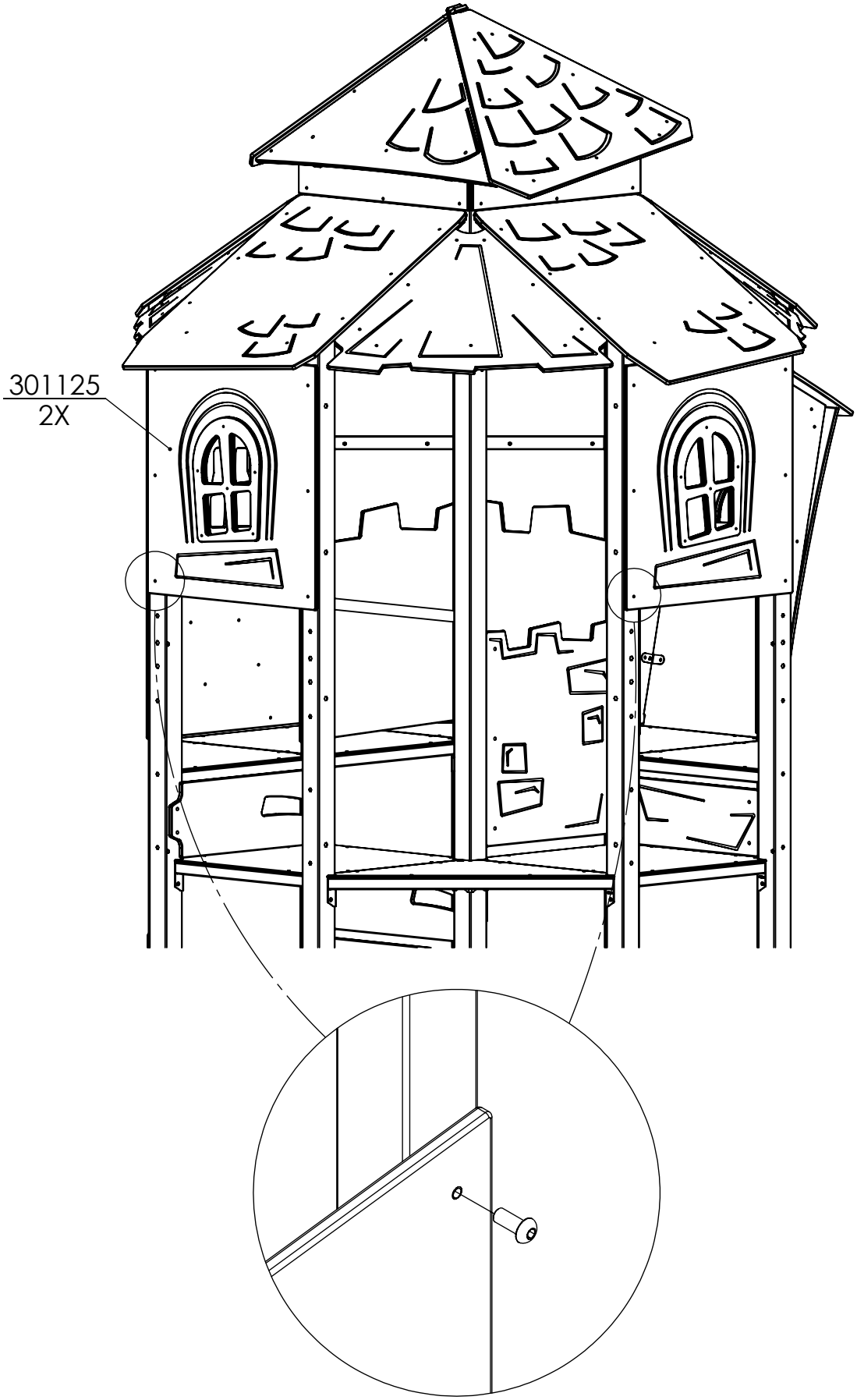

[cm]

vinci play

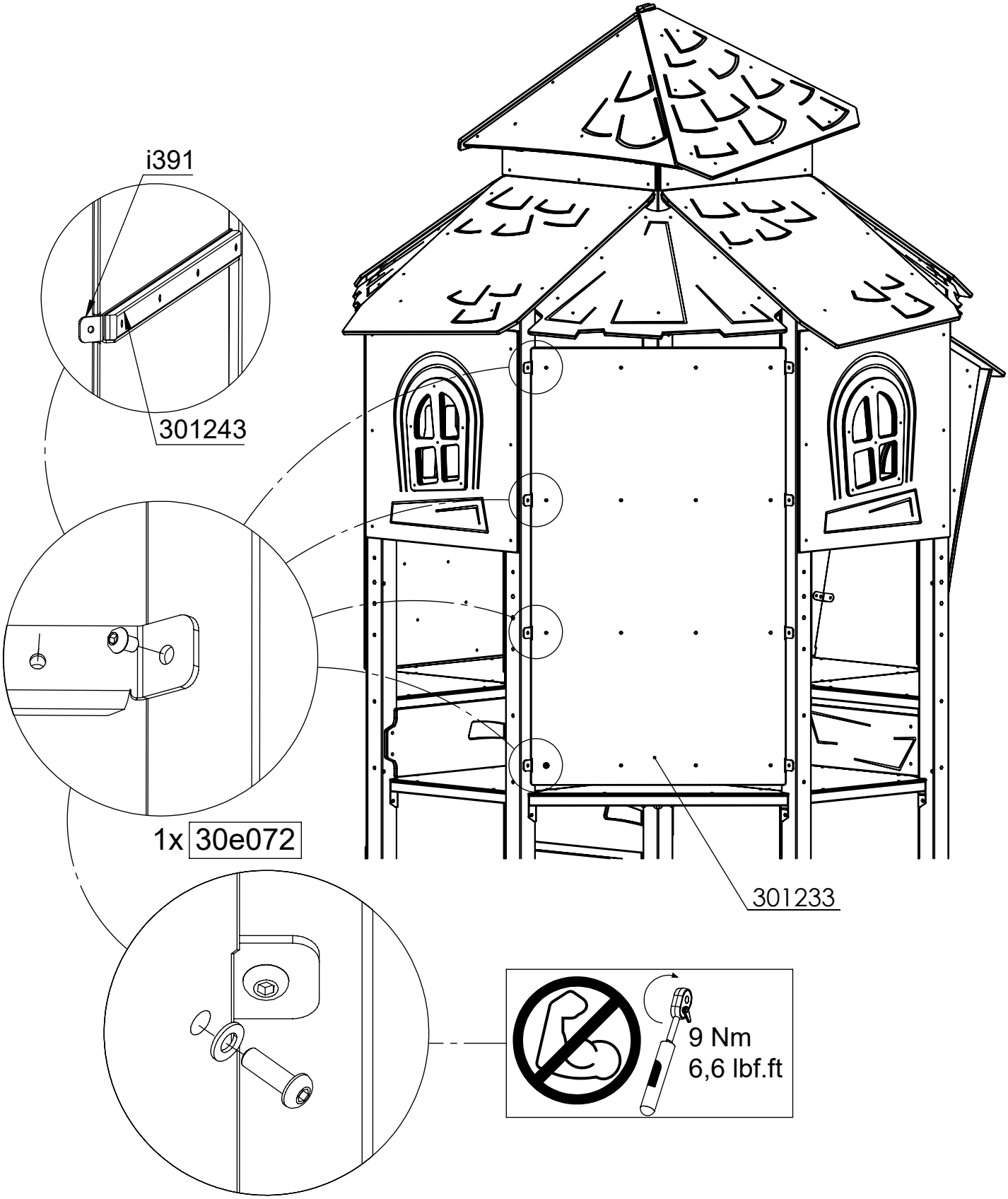

[cm]

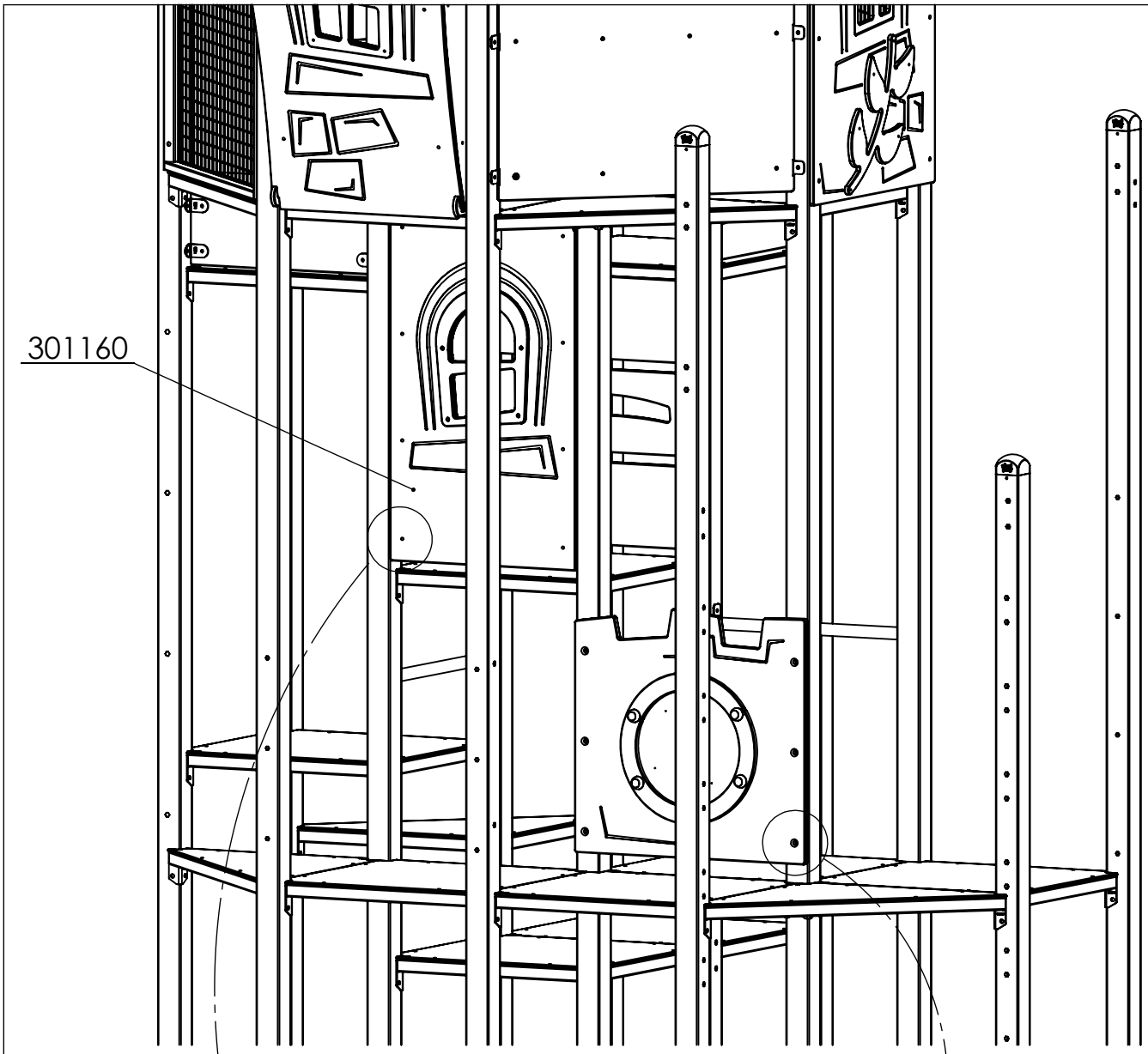

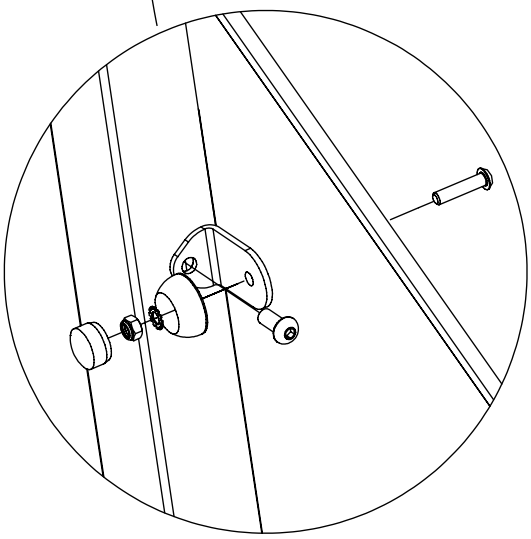

2x 30e056

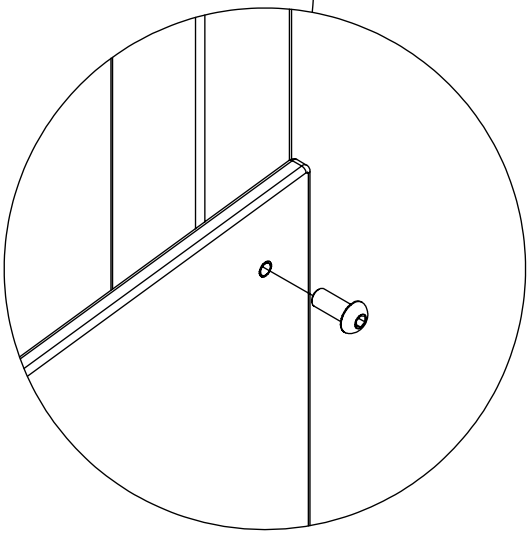

6x 8x30ikl

[cm]

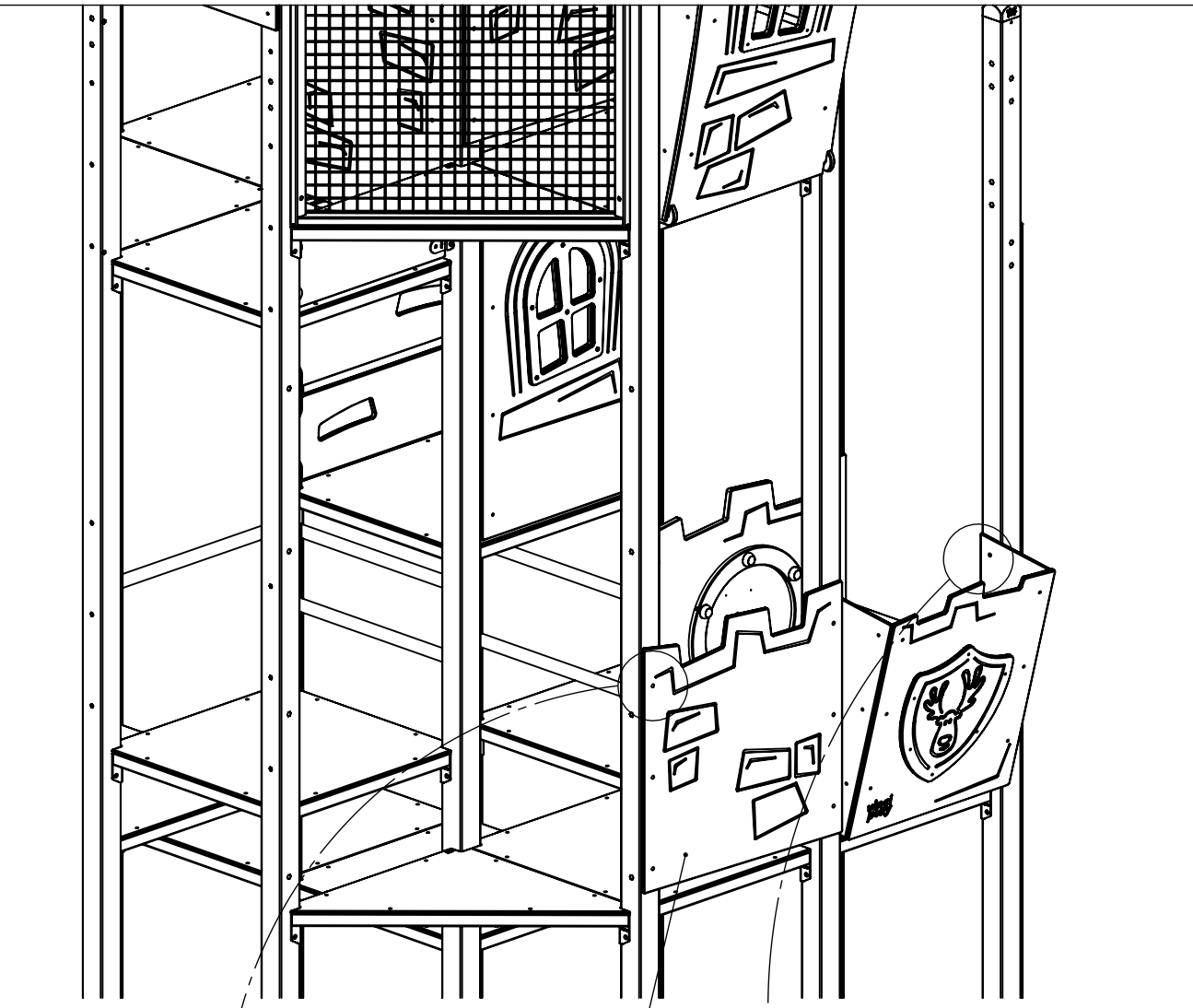

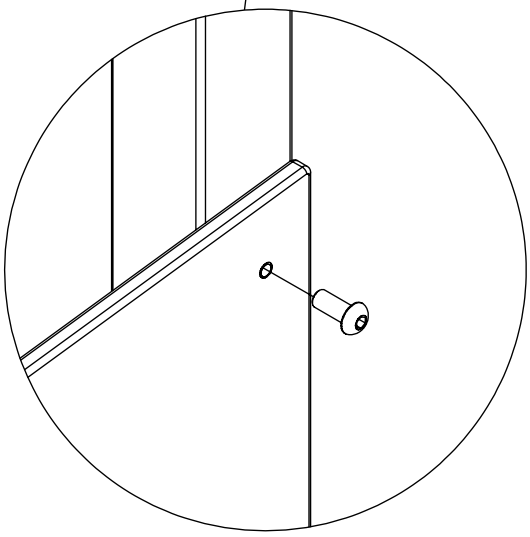

6x 8x25ikl

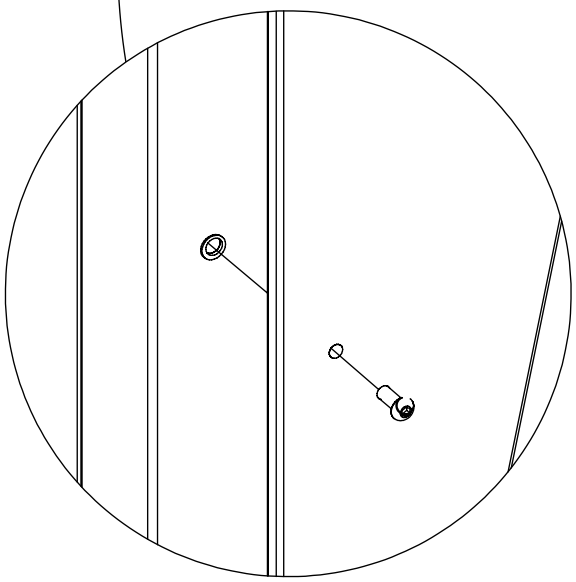

4x 10x25ikl

[cm]

vinci play

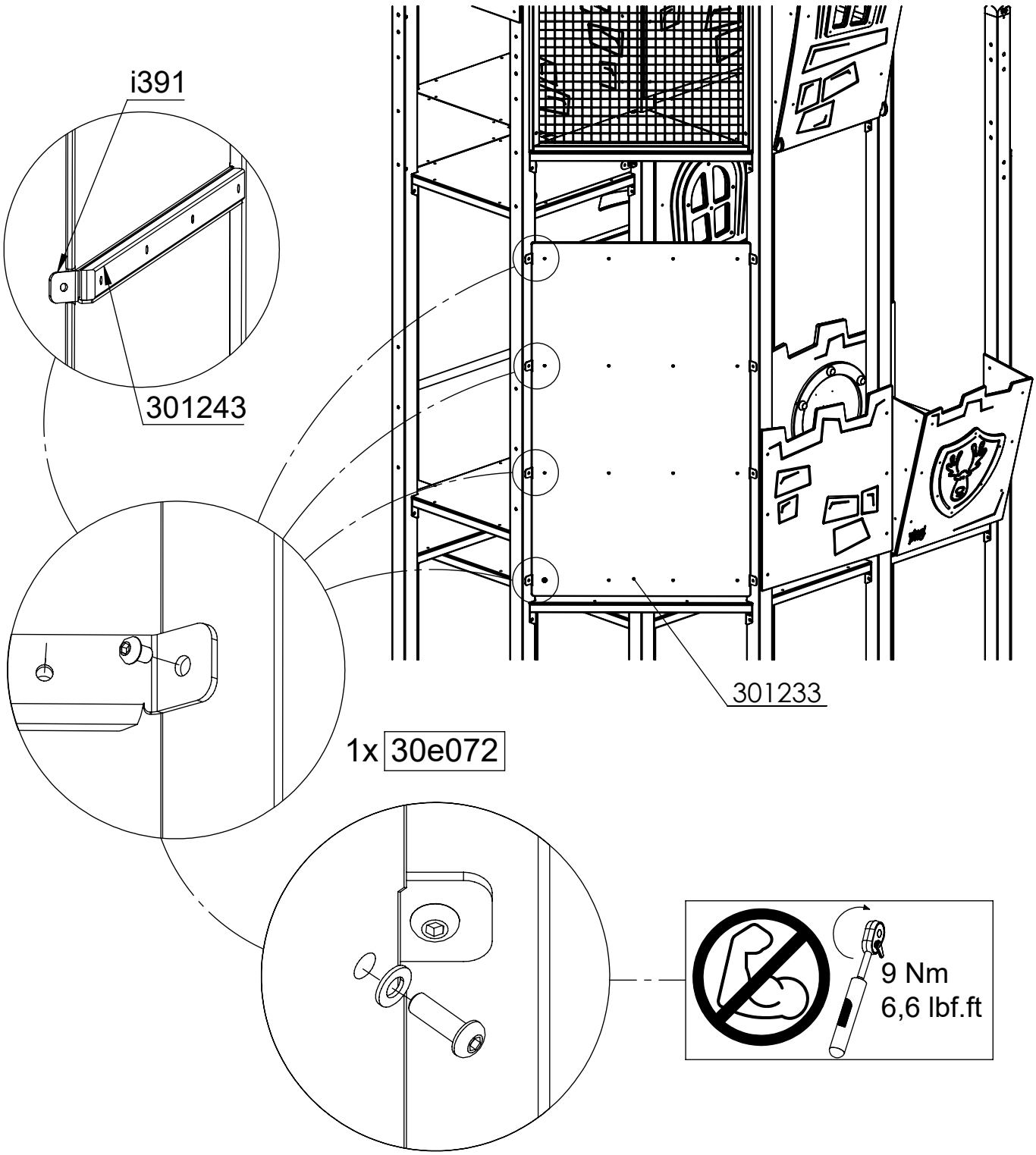

[cm]

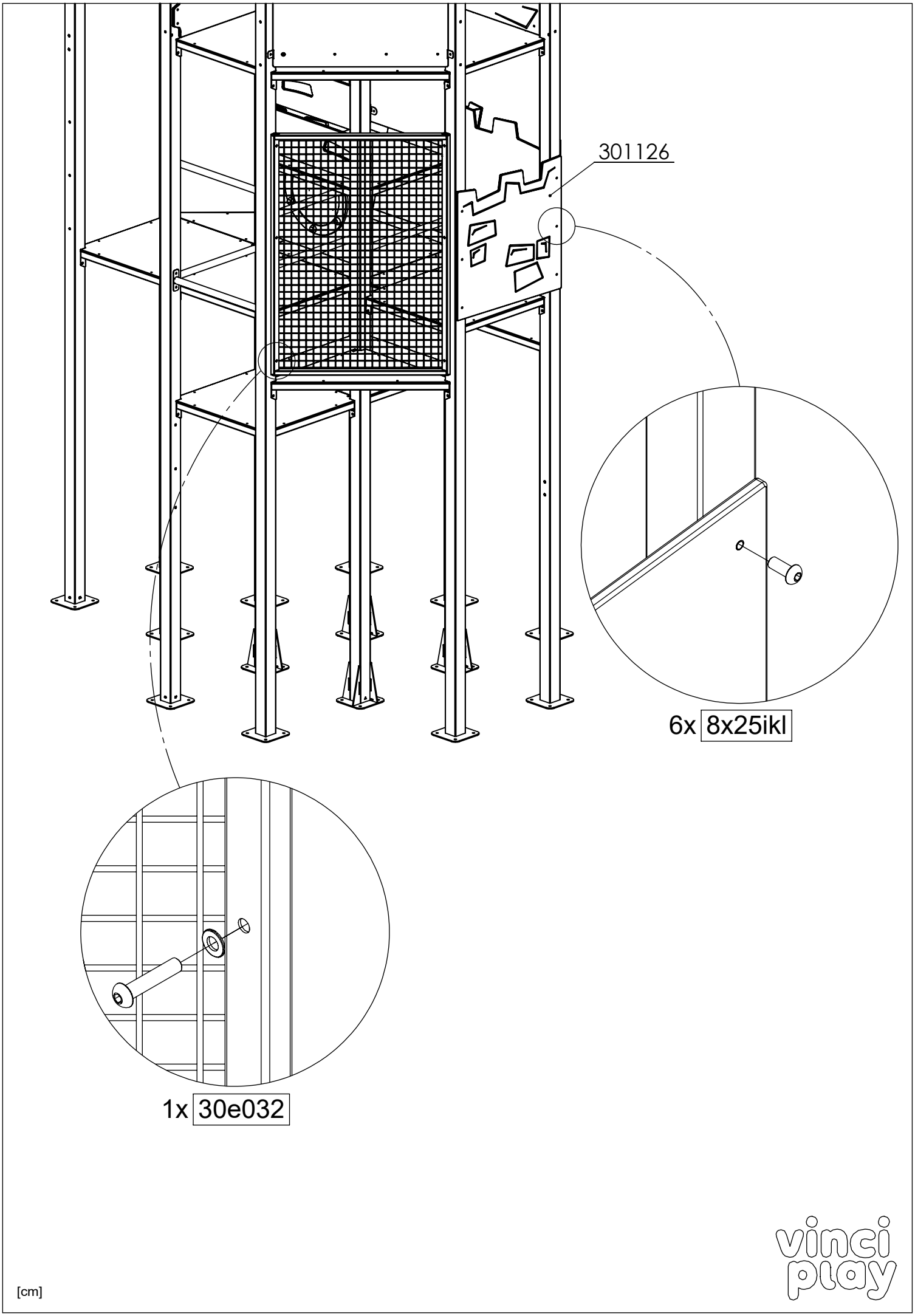
301126
6x 8x25ikl
1x 30e032
[cm]
vinci play

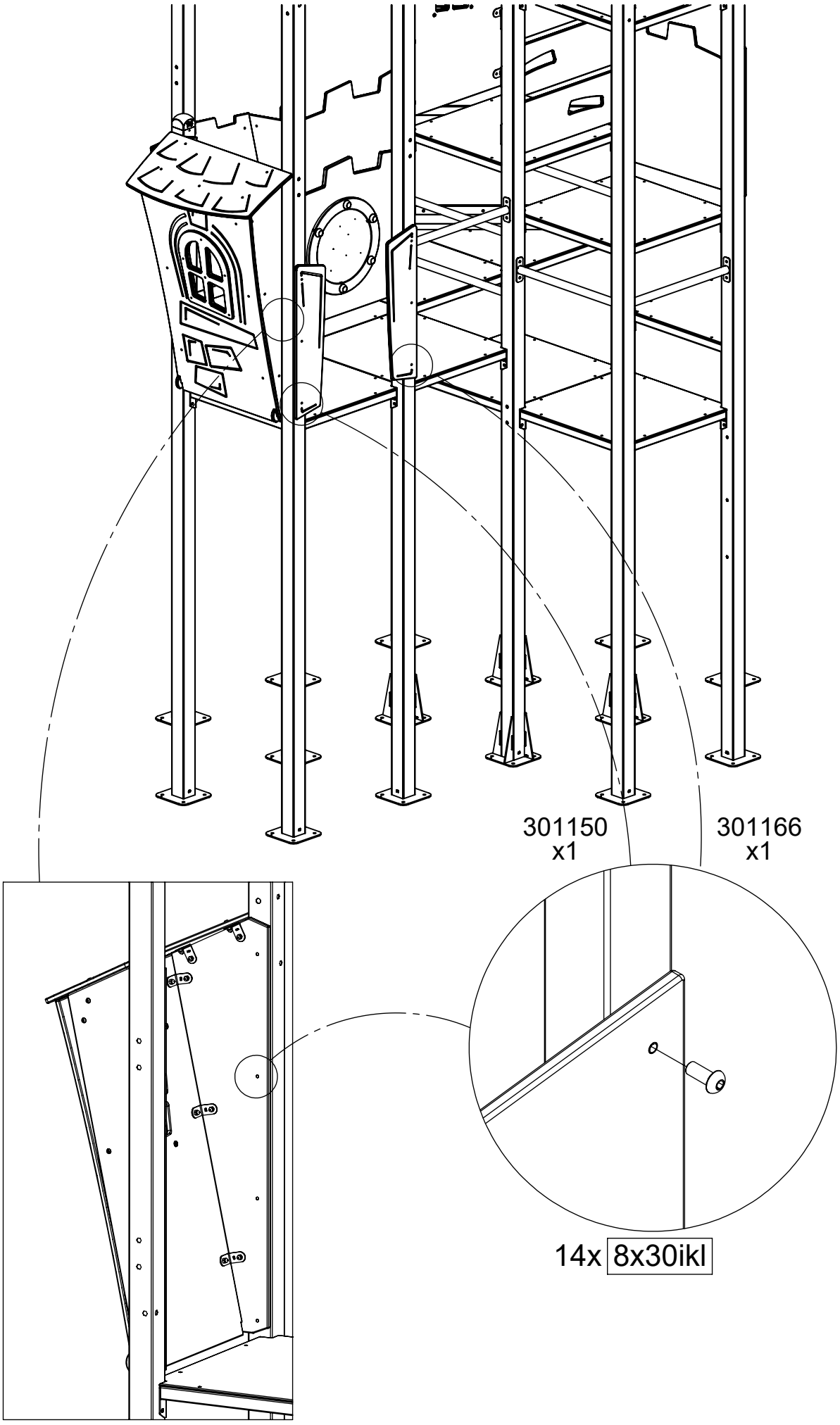

[cm]

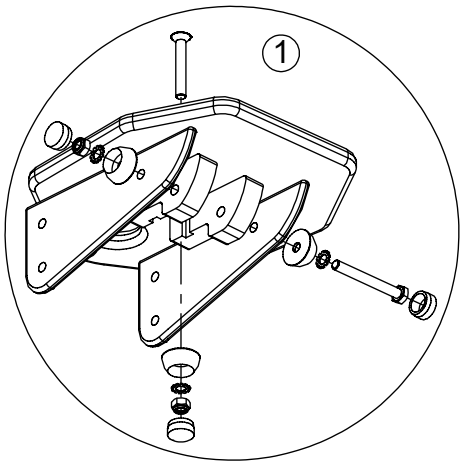

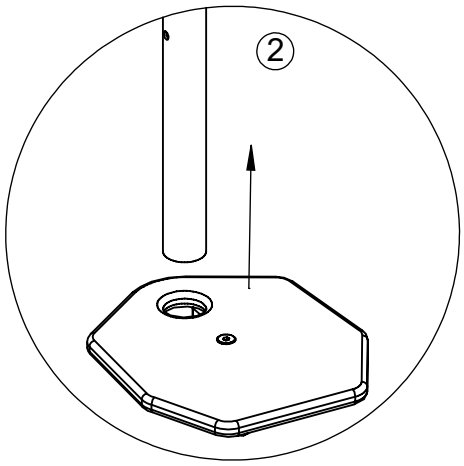

4x WD67

4x WD68

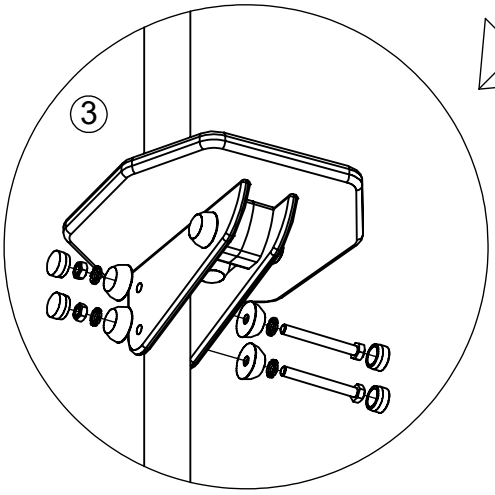

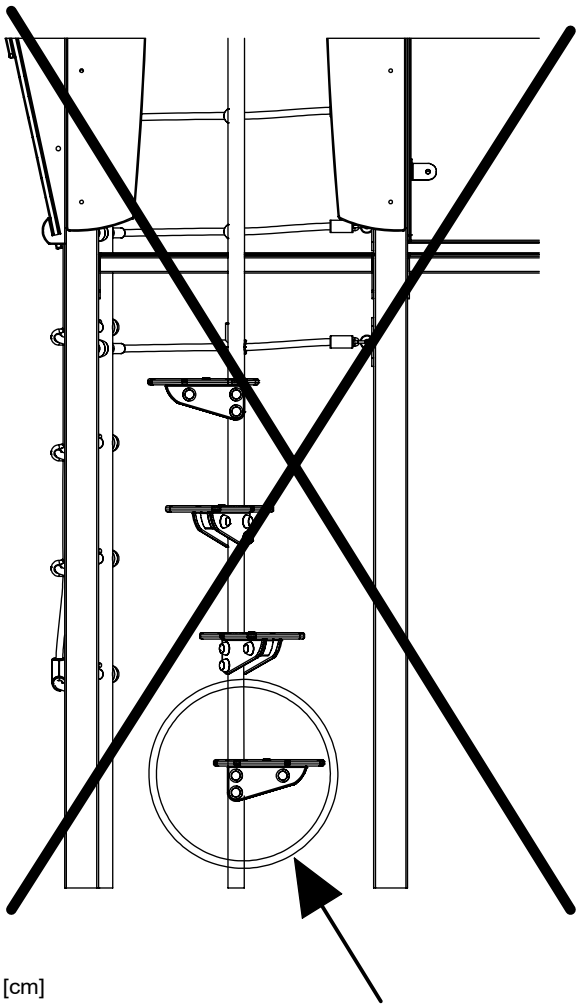

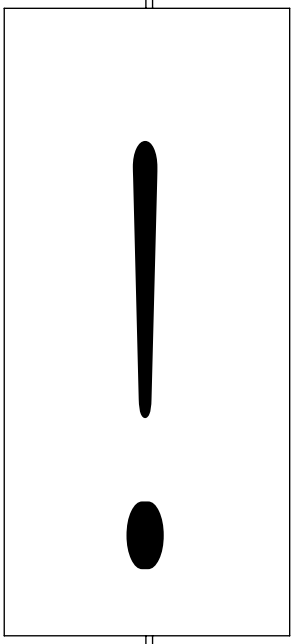

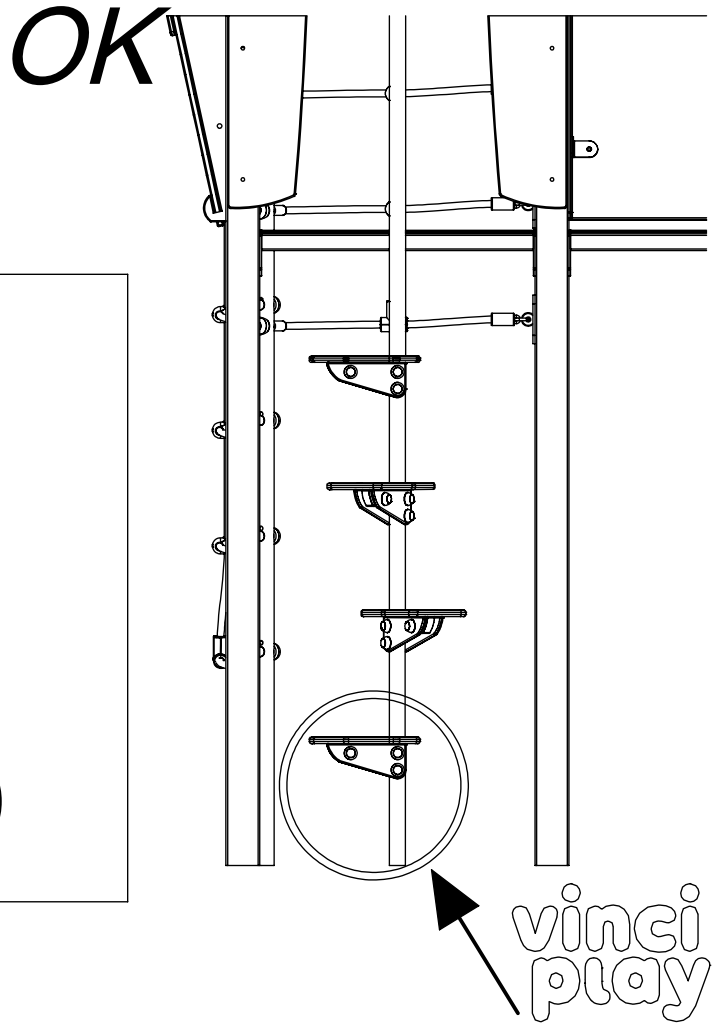

[cm]

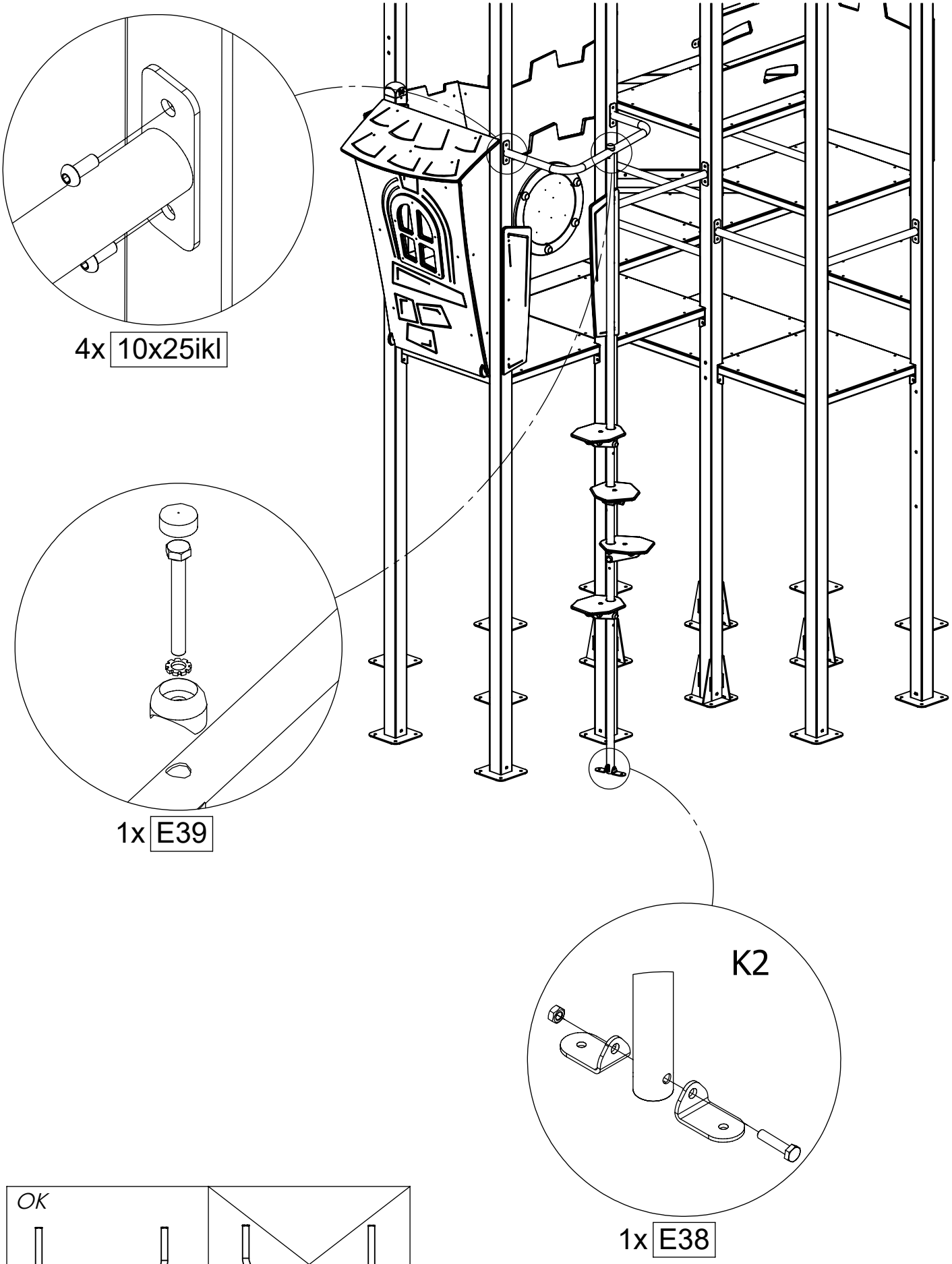

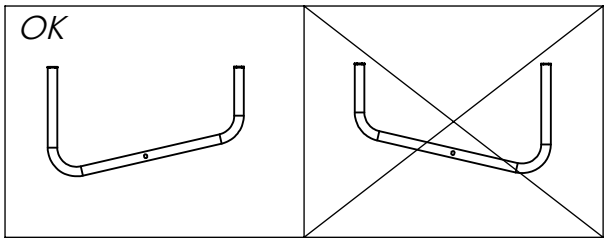

[cm]

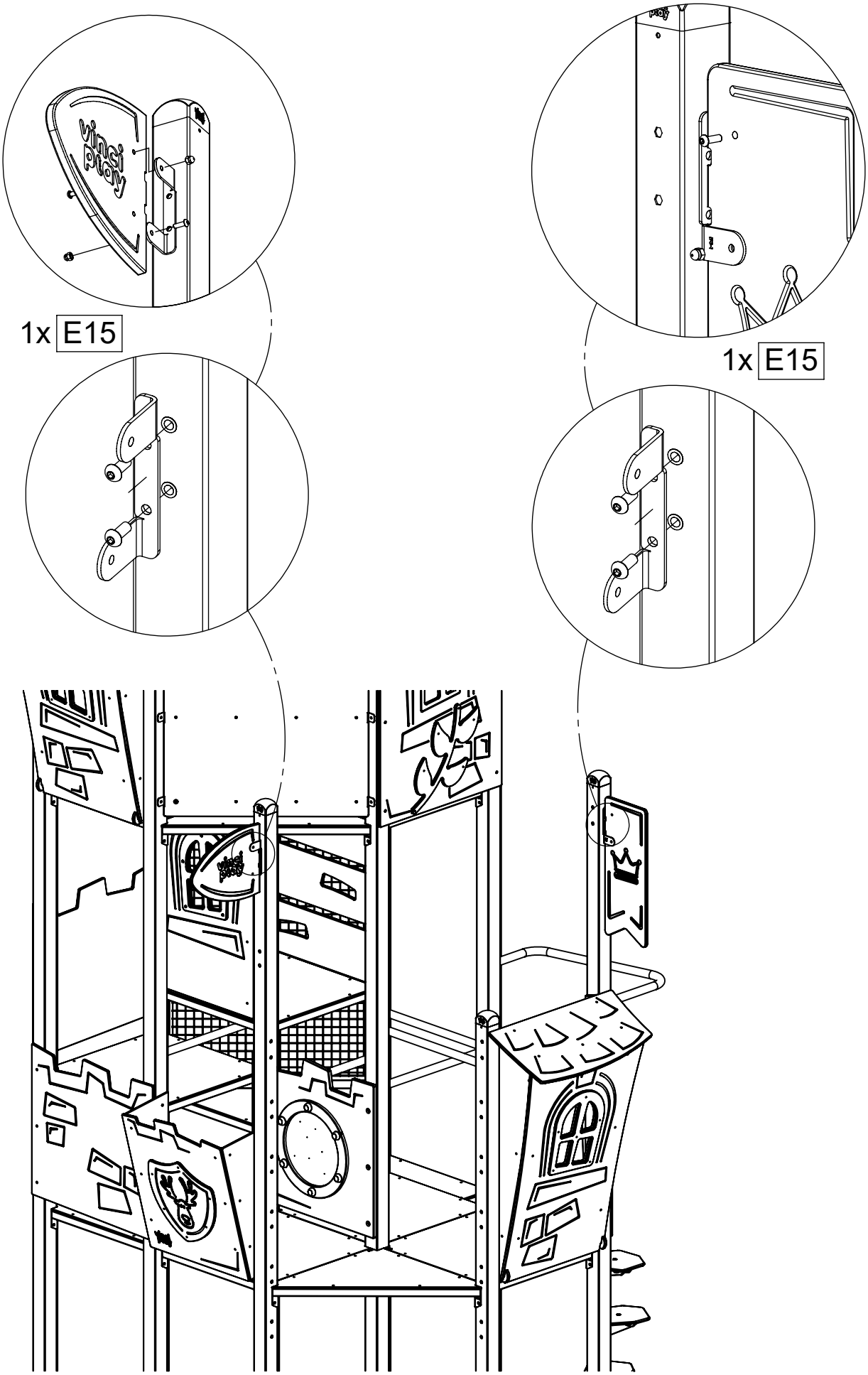

[cm]

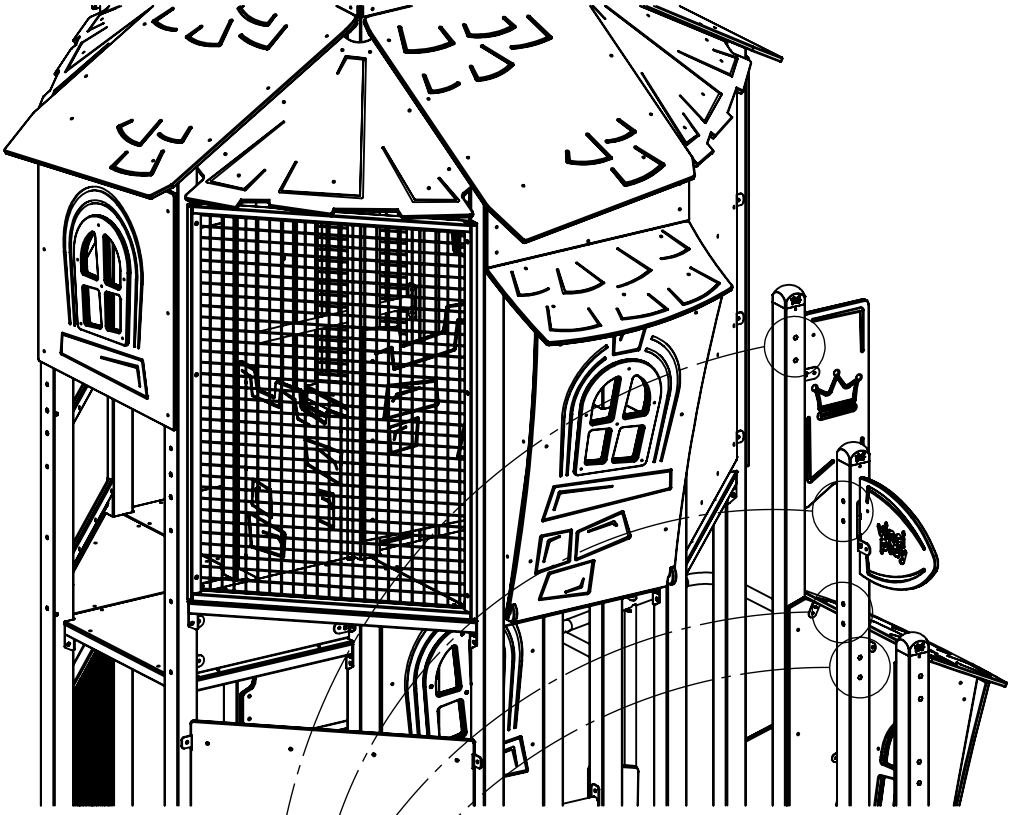

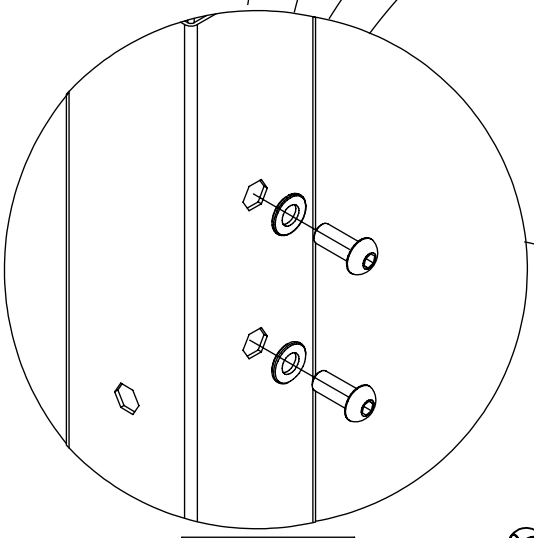

10x 10x25ikl

10x 10pp

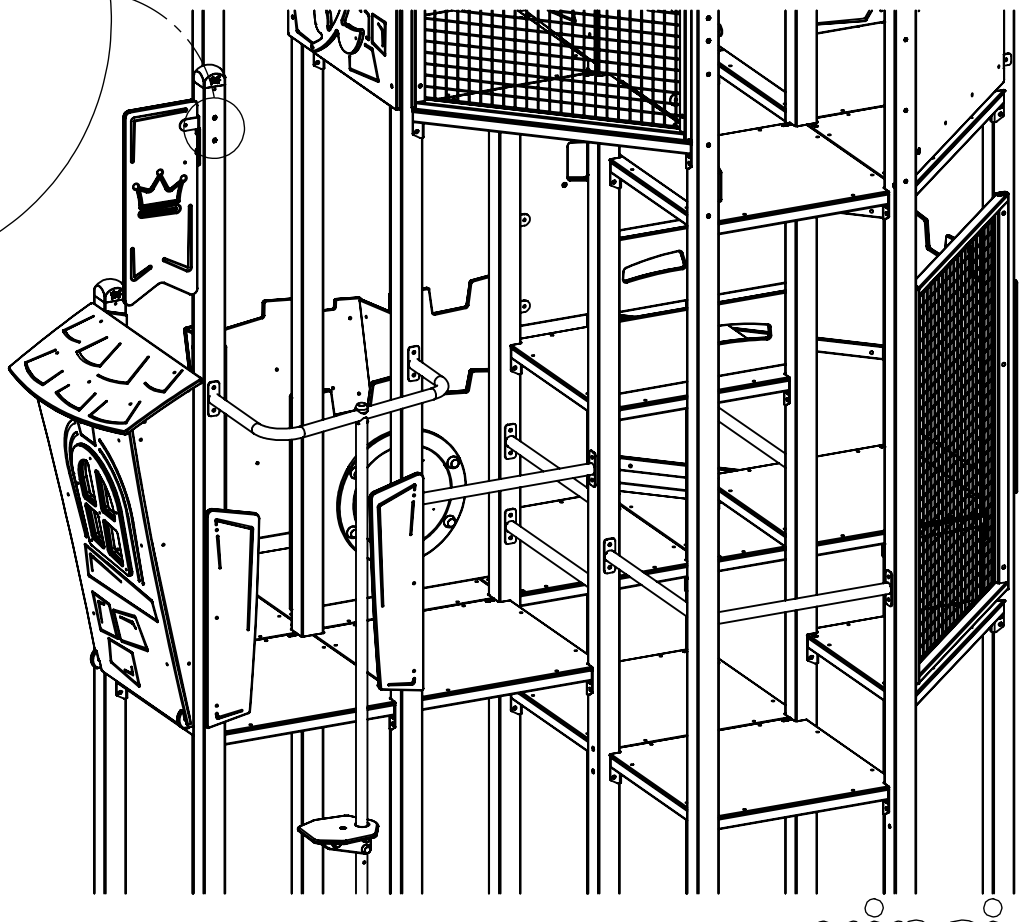

[cm]

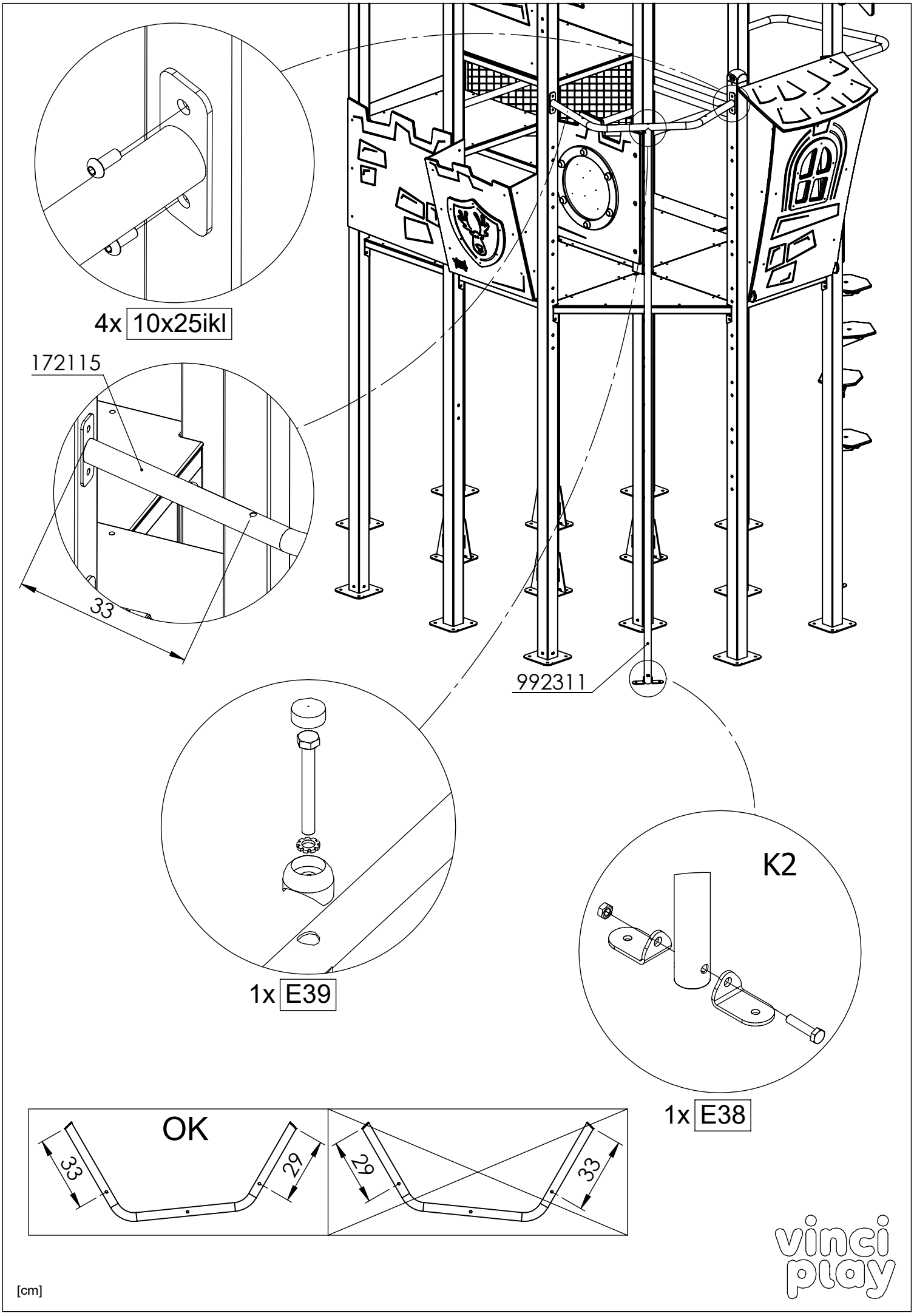
4x 10x25ikl
172115
33
992311
1x E39
K2
1x E38
OK
33
29
29
33
[cm]
vinci play

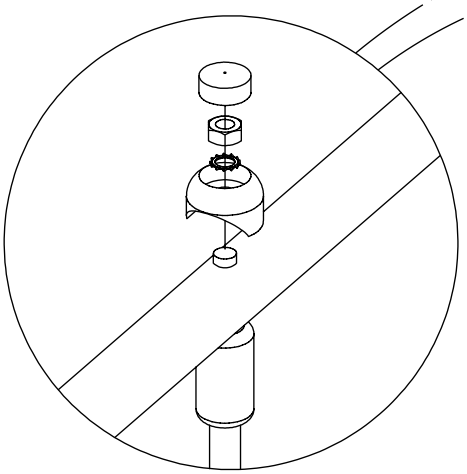

1x 30e016
1x 30e019

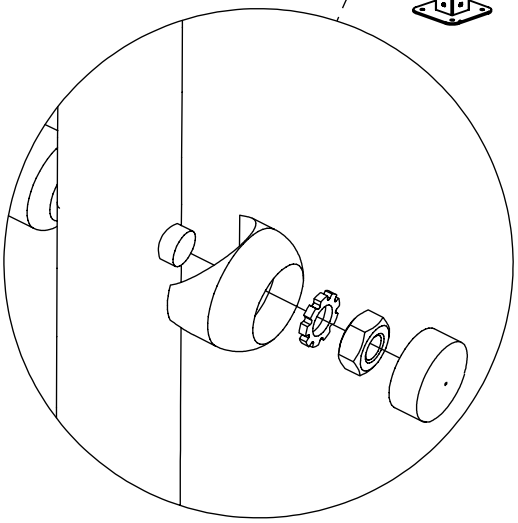

30e016
30e019

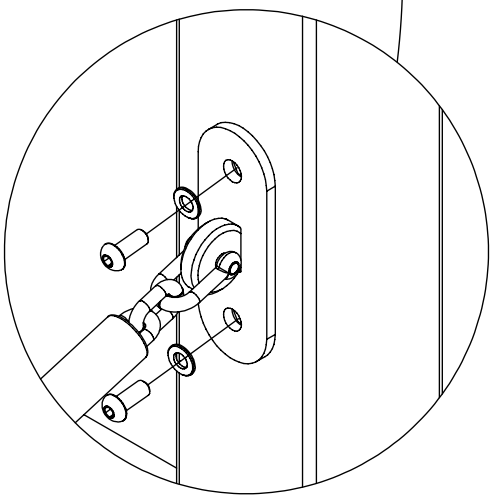

1x 30e075
26x 10x25ikl
26x 10pp

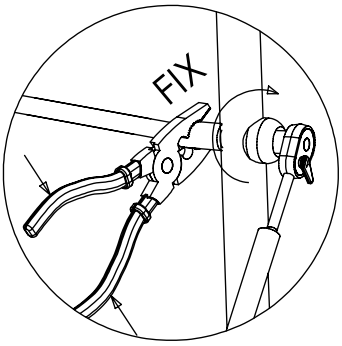

[cm]

vinci play

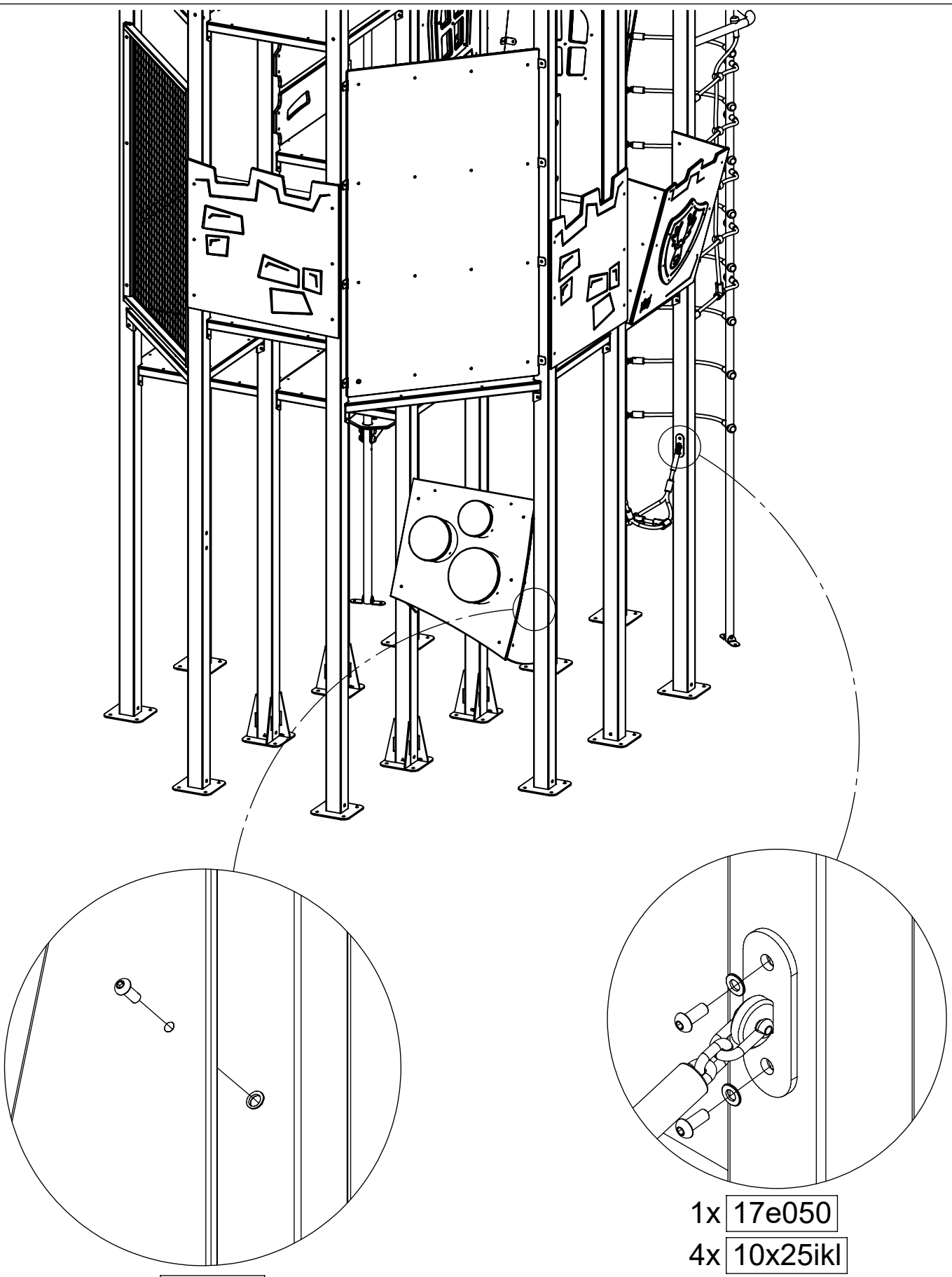

6x 8x25ikl

1x 17e050

4x 10x25ikl

4x 10pp

[cm]

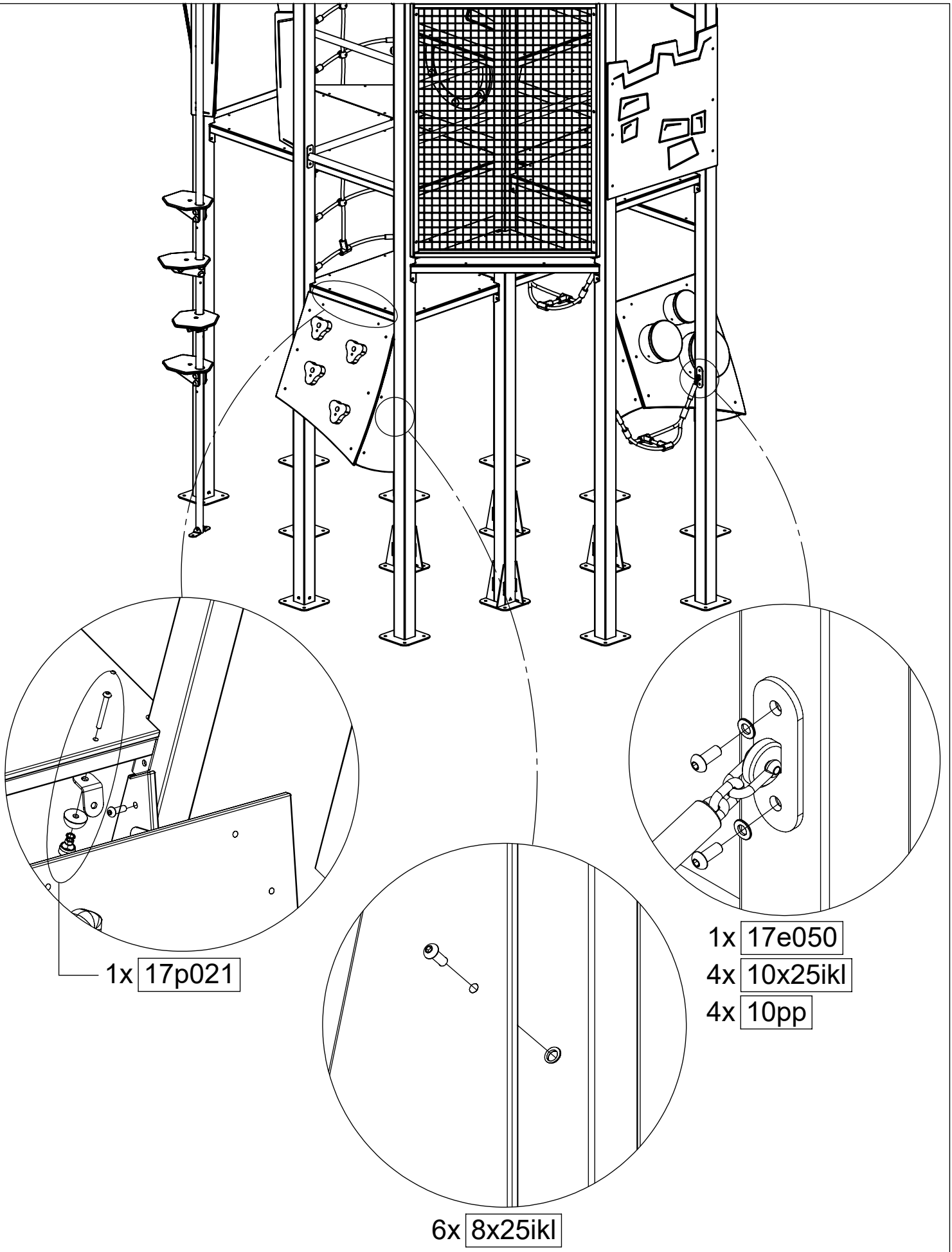

[cm]

vinci play

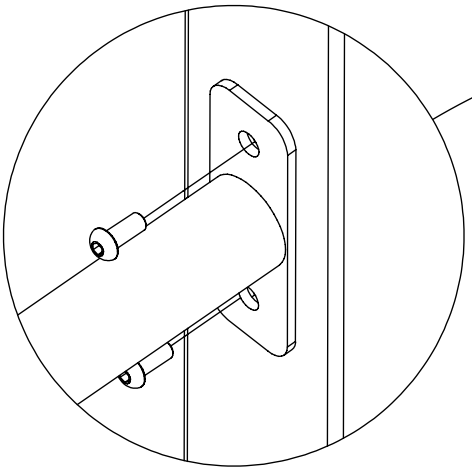

4x 10x25ikl

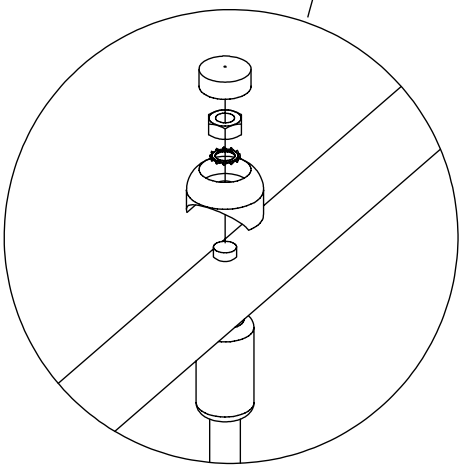

1x WD14-1

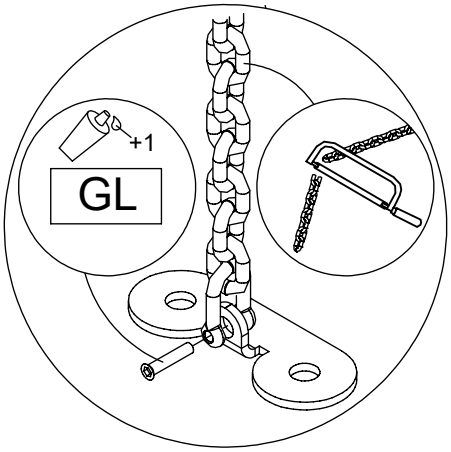

1x WD52

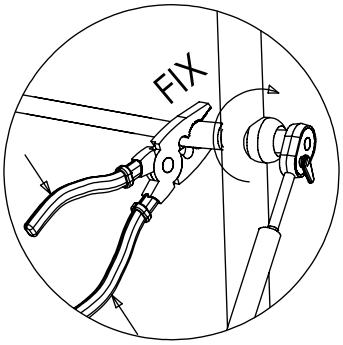

[cm]

3060-1.06

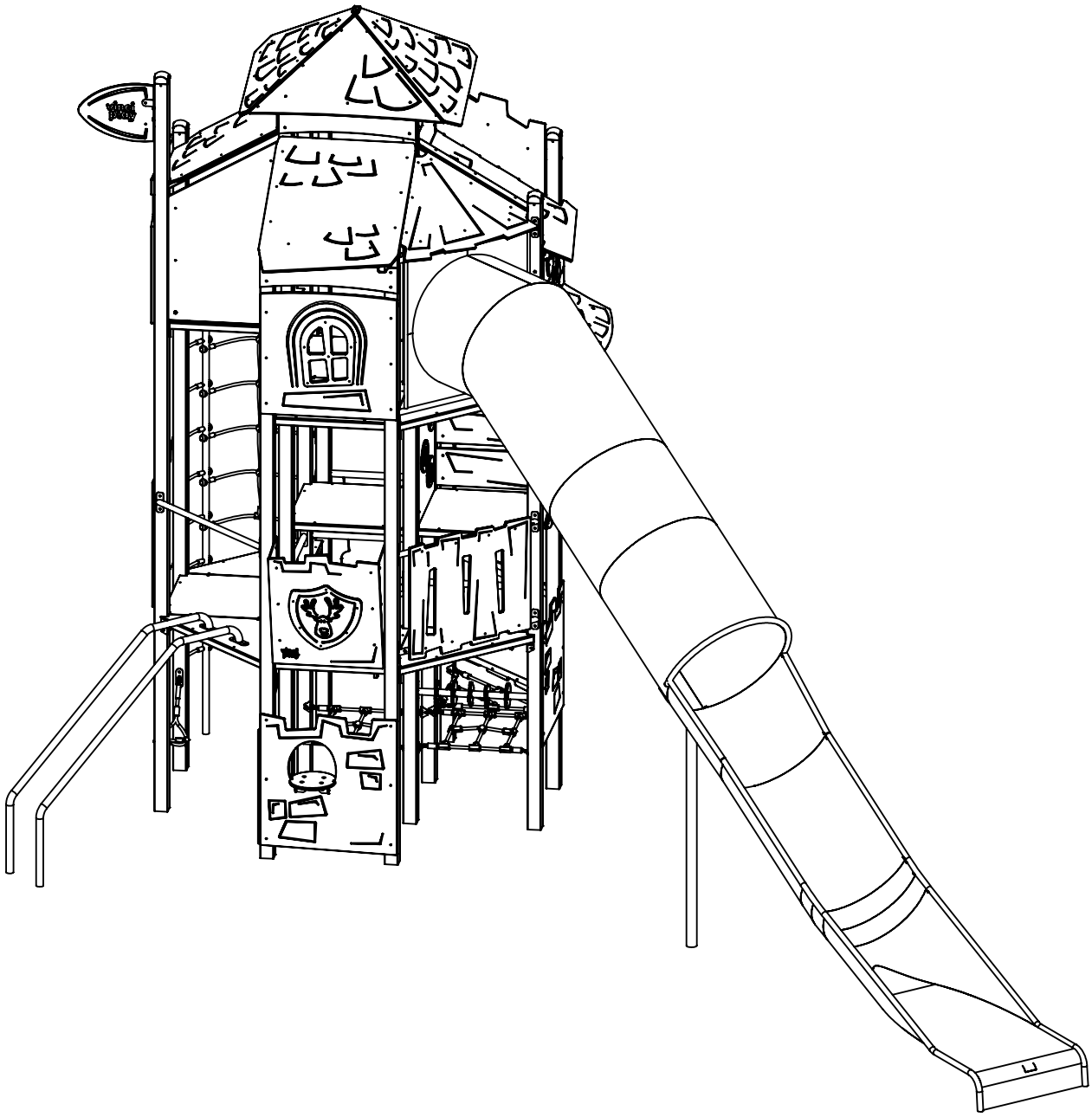

[cm]

vinci play

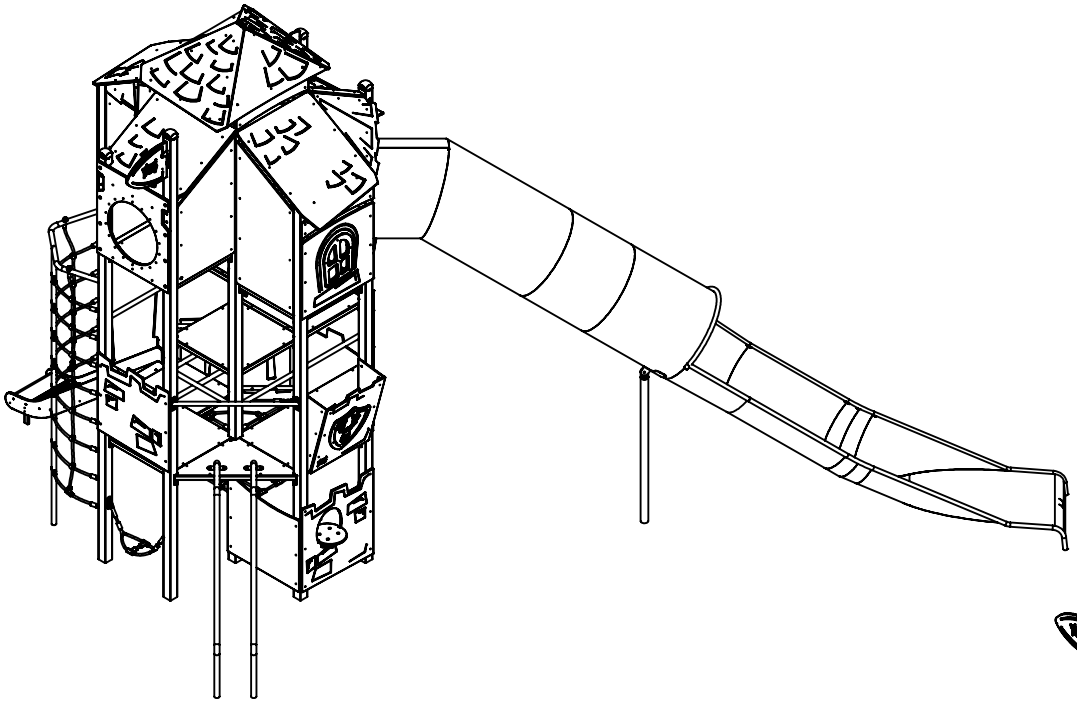

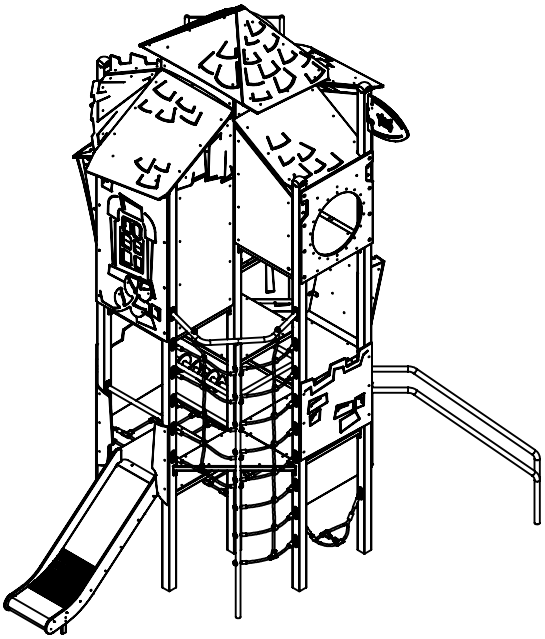

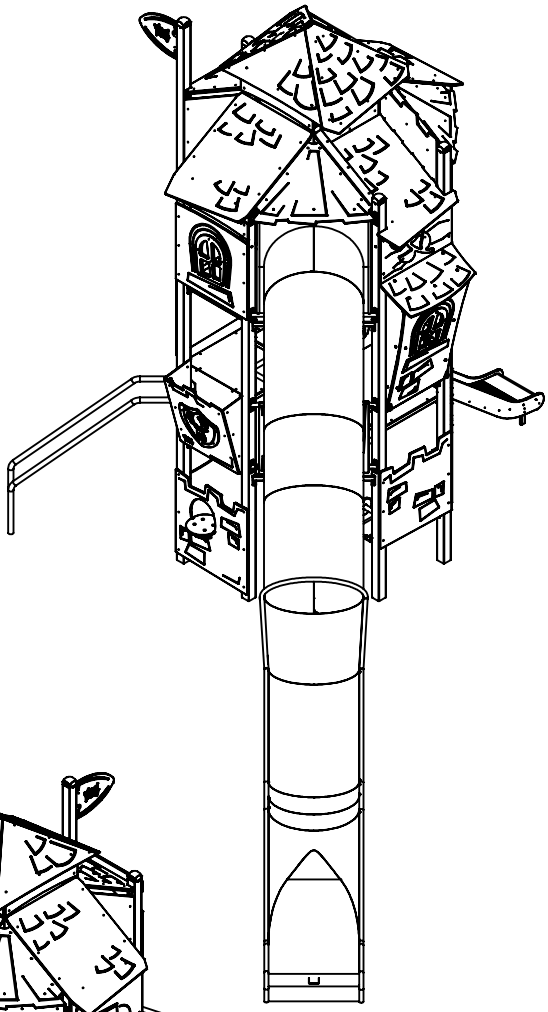

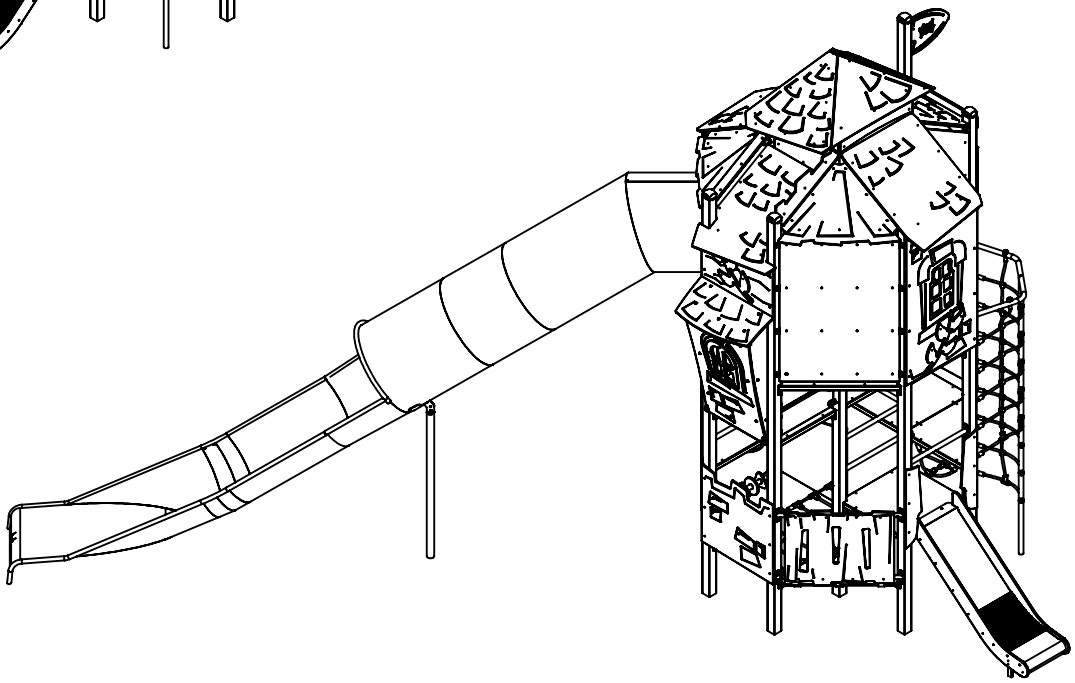

[cm]

vinci play

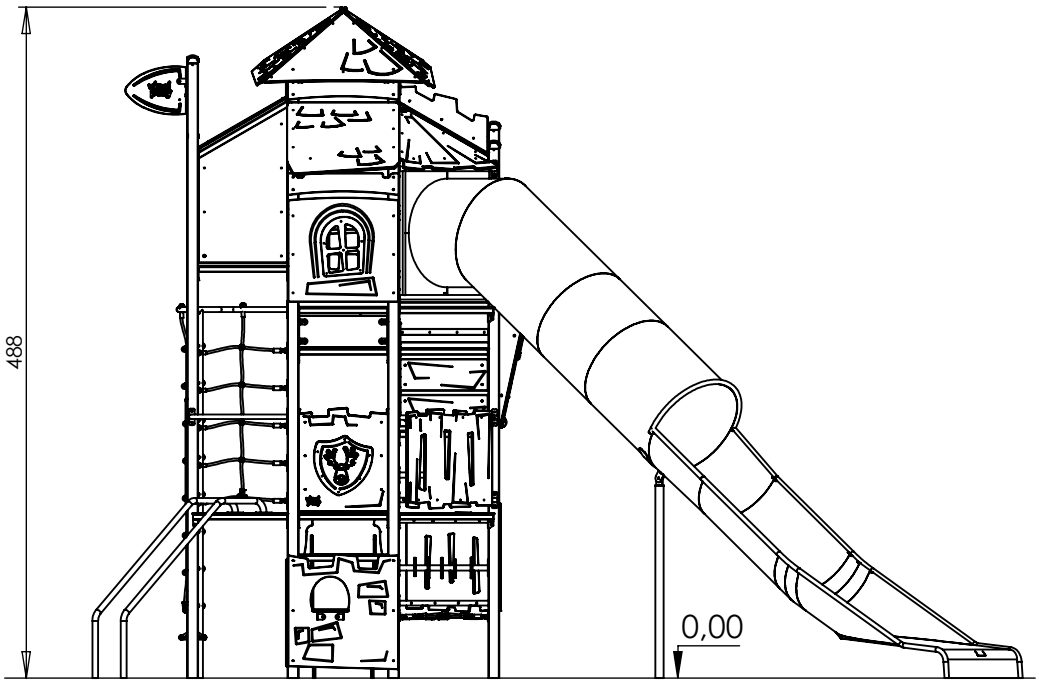

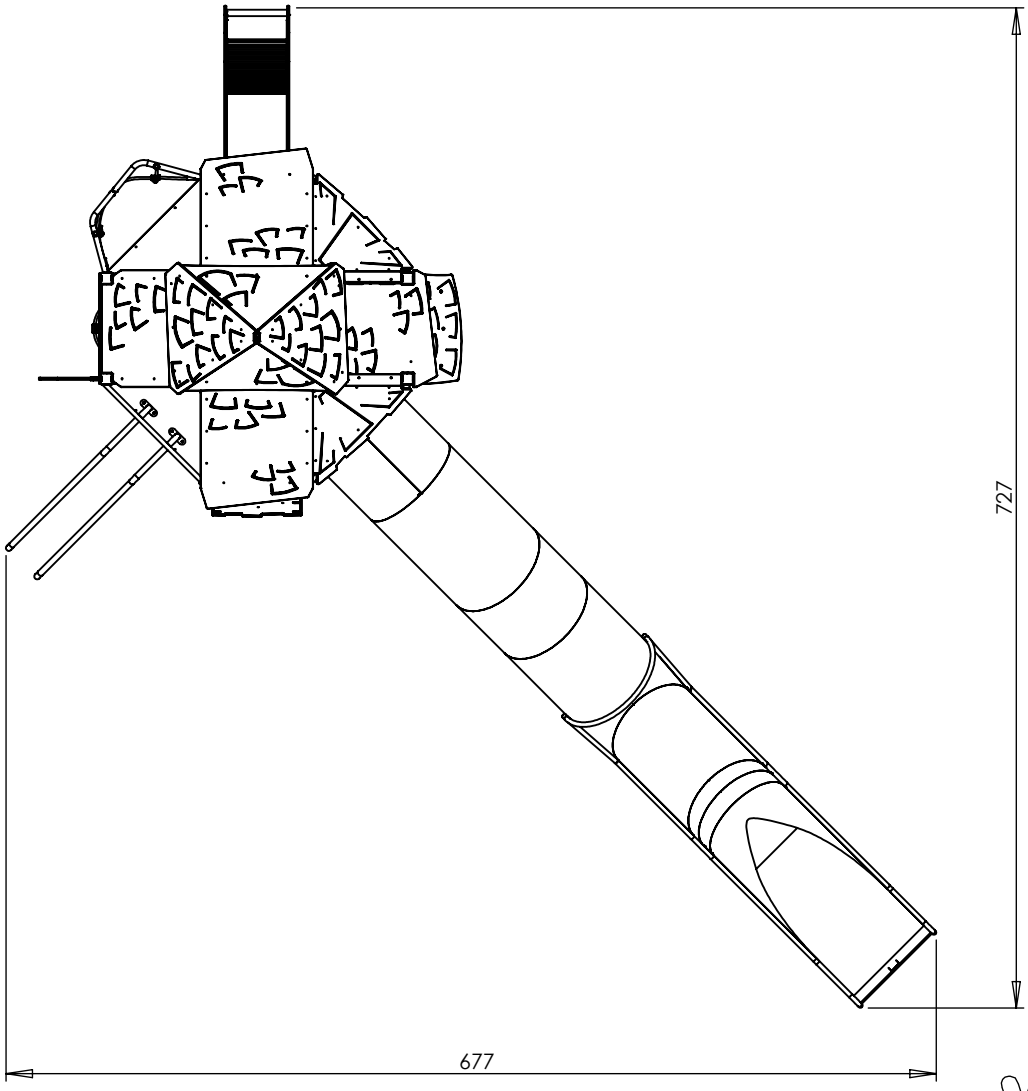

[cm]

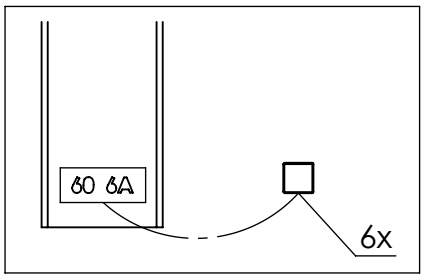
60 6A
6x

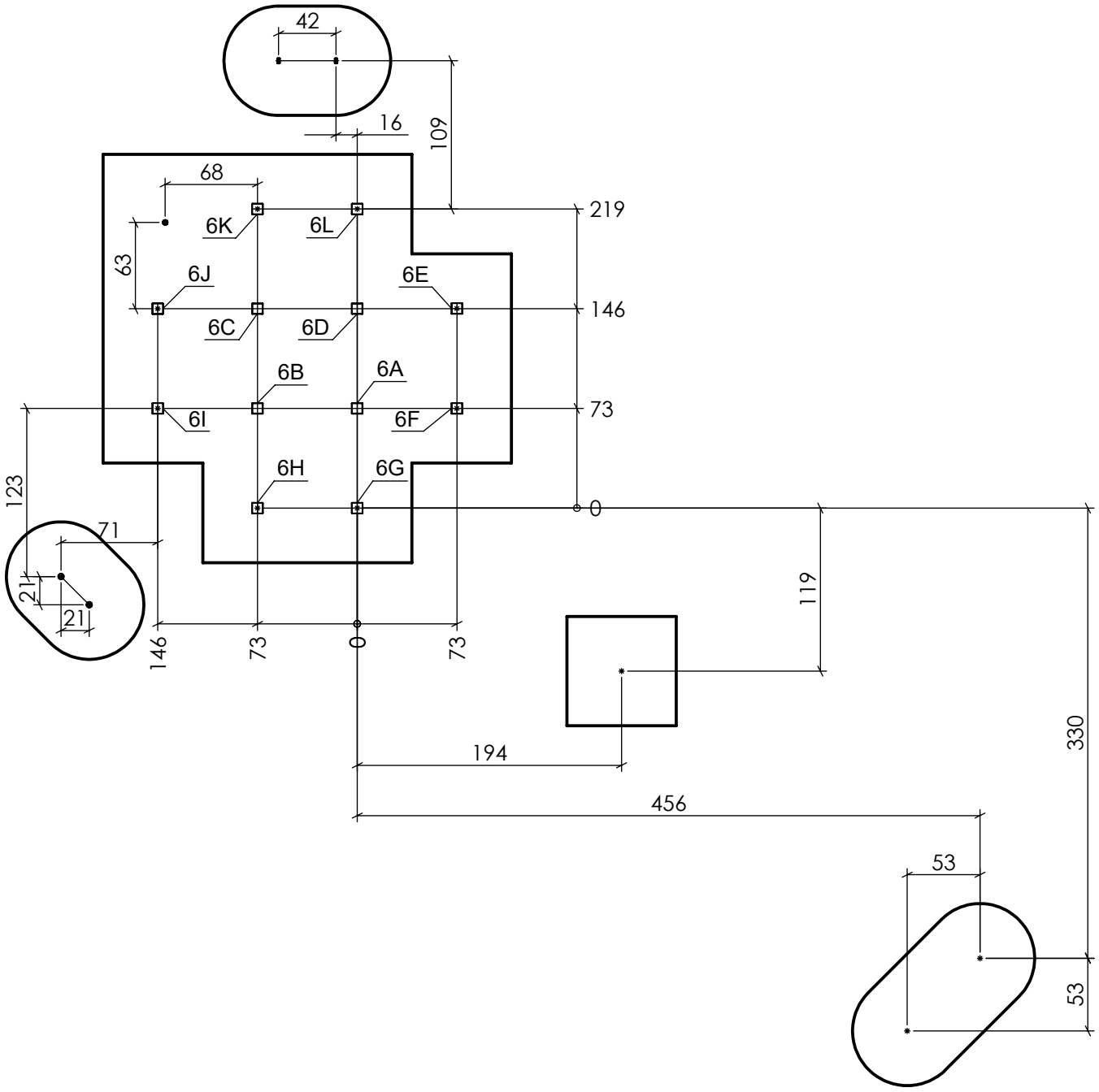
42
16
109
68
219
6K
6L
63
6J
6E
146
6C
6D
6B
6A
73
6I
6F
123
6H
6G
0
71
21
21
119
146
73
0
73
330
194
456
53
53

[cm]

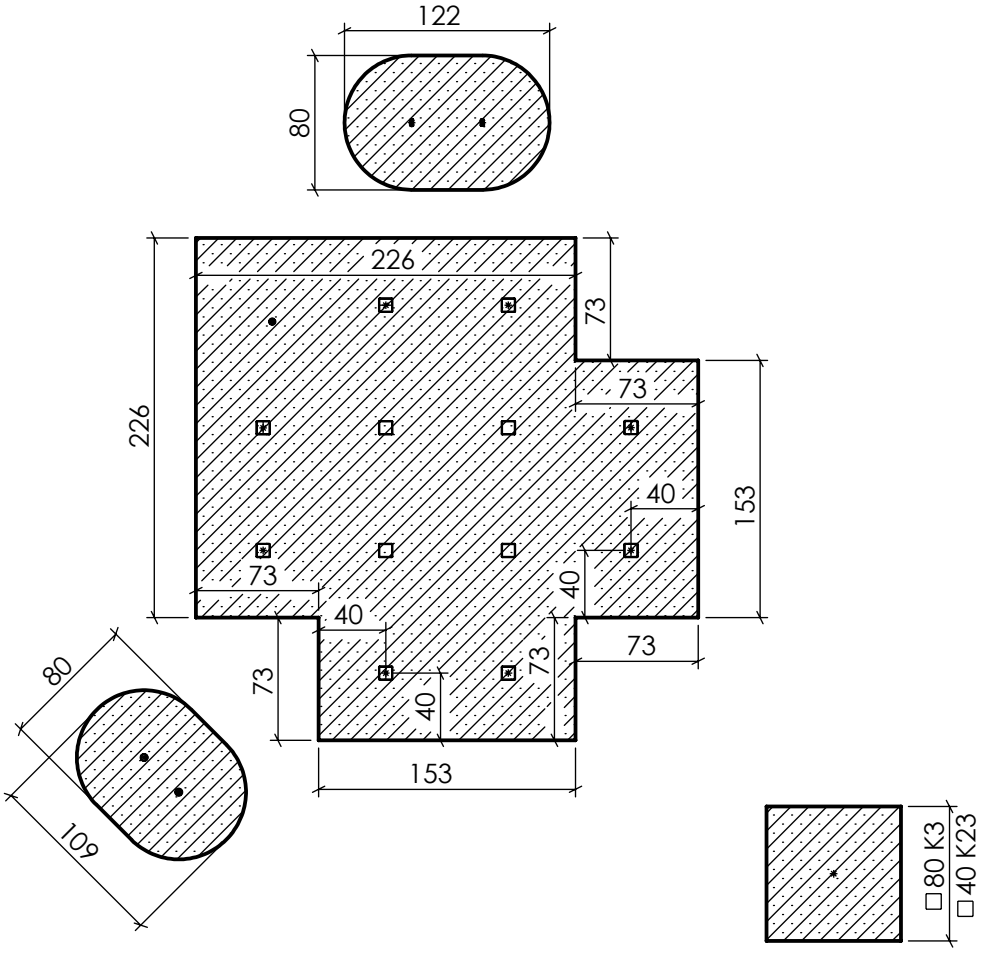
122
80
226
73
73
226
153
40
73
40
40
73
73
73
40
153
80
109
□80 K3
□40 K23

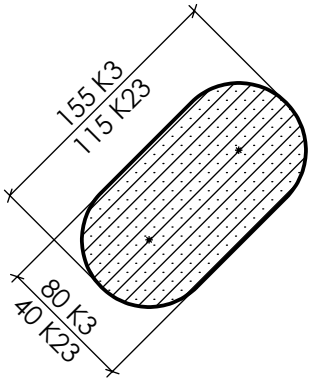
155 K3
115 K23
80 K3
40 K23

[cm]

3060-1.06S2

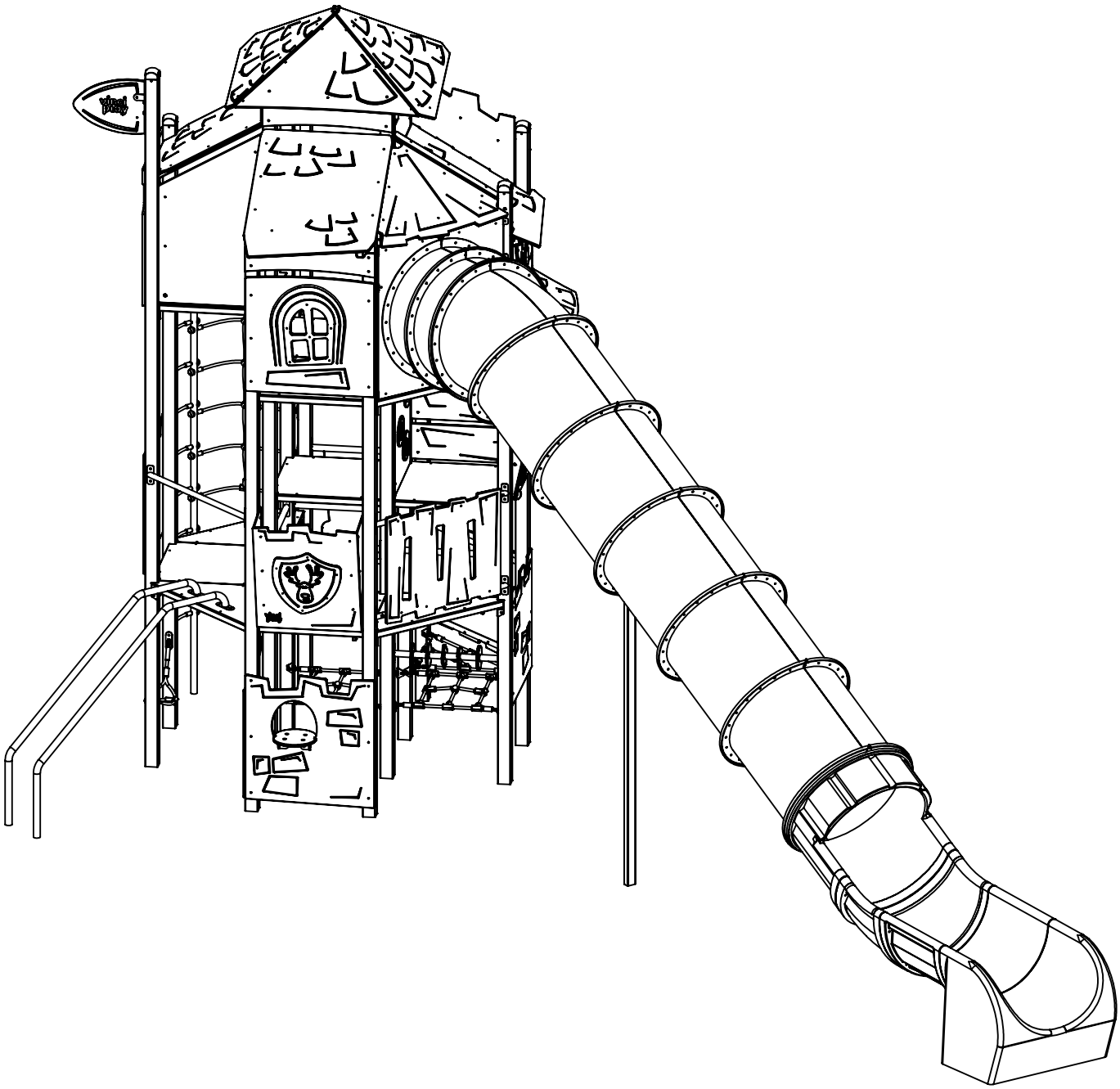

[cm]

3060-1.06S2

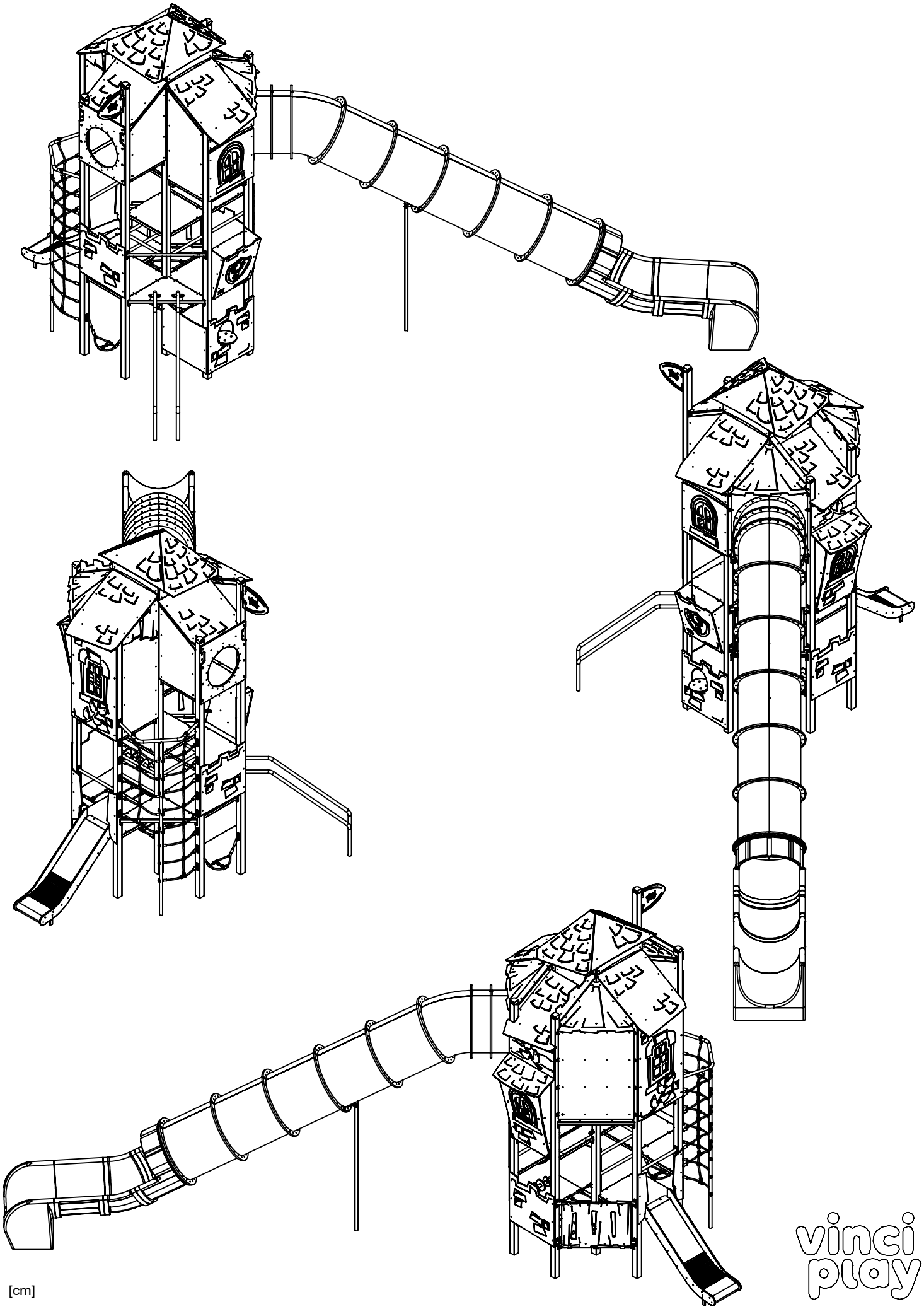

[cm]

vinci play

3060-1.06S2

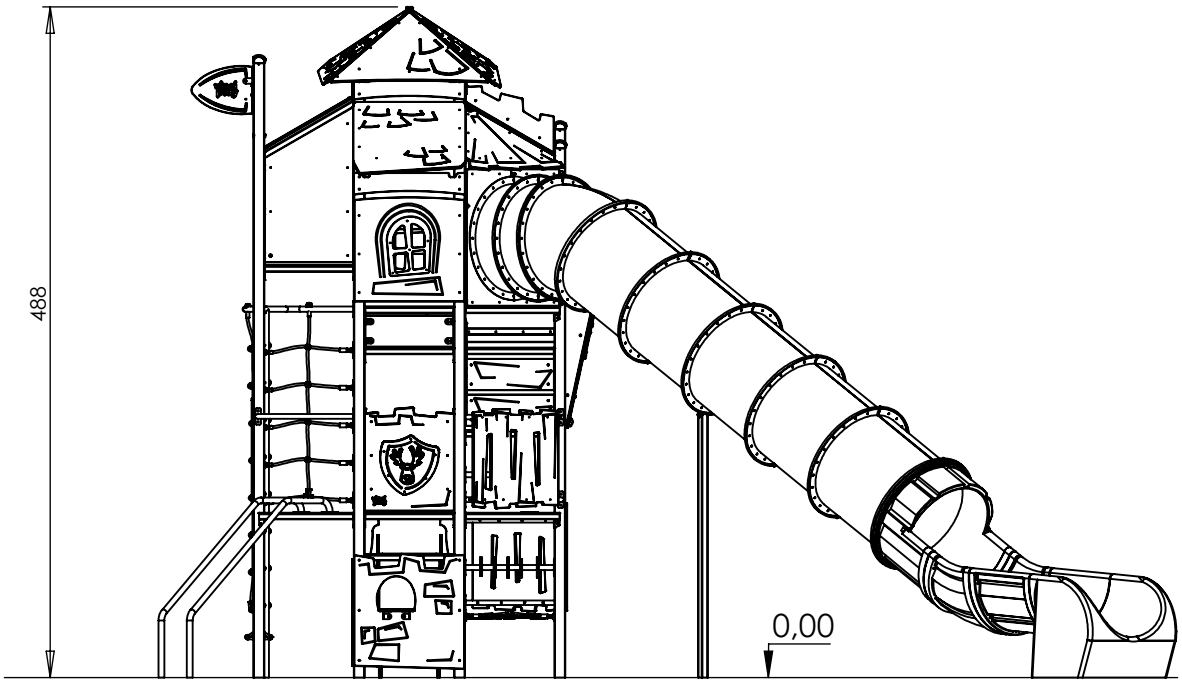

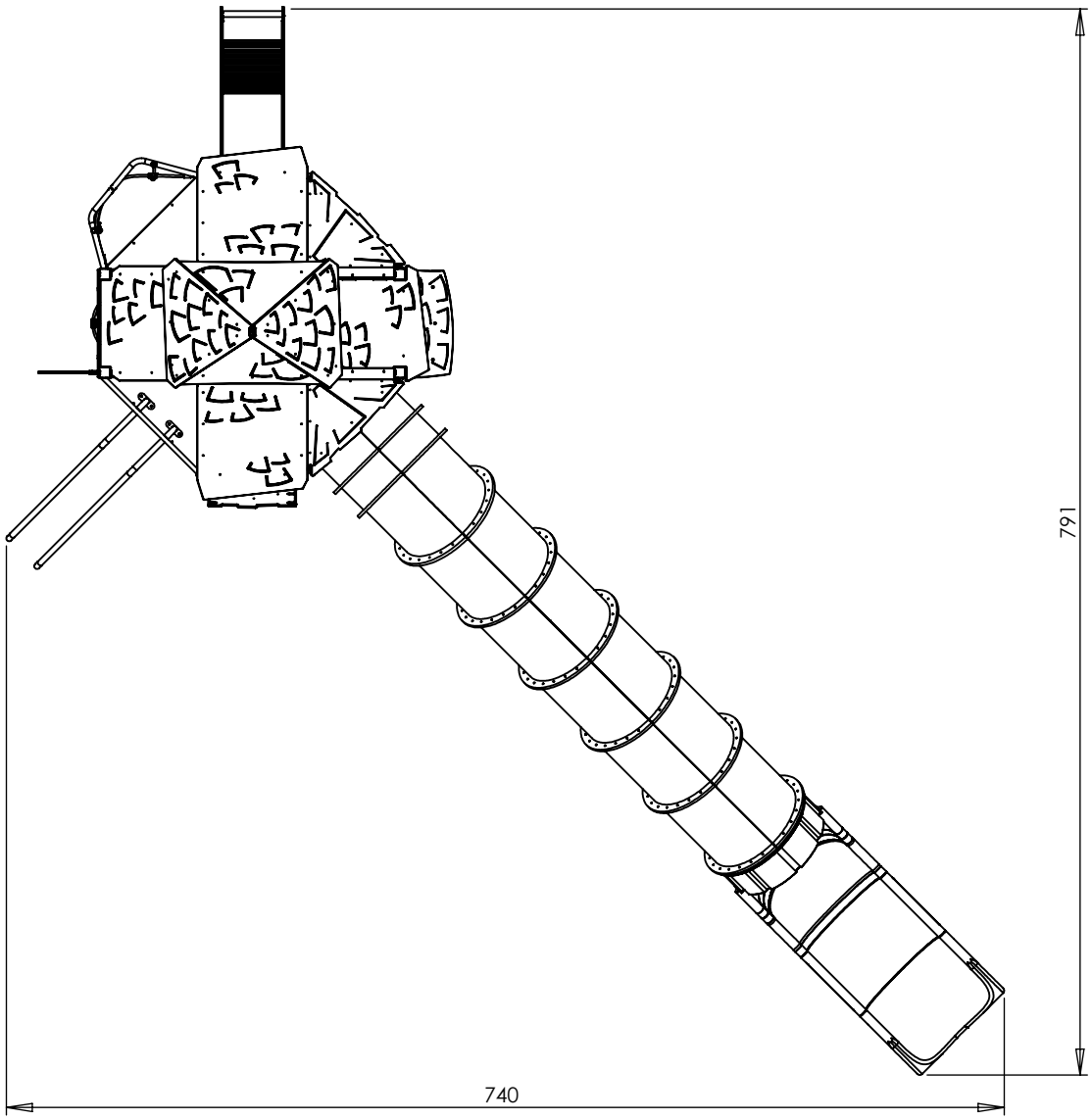

[cm]

3060-1.06S2

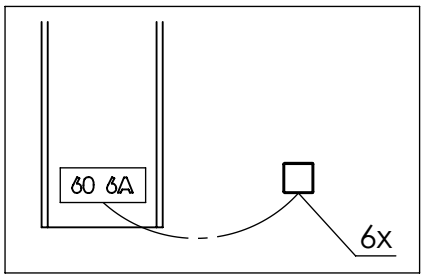

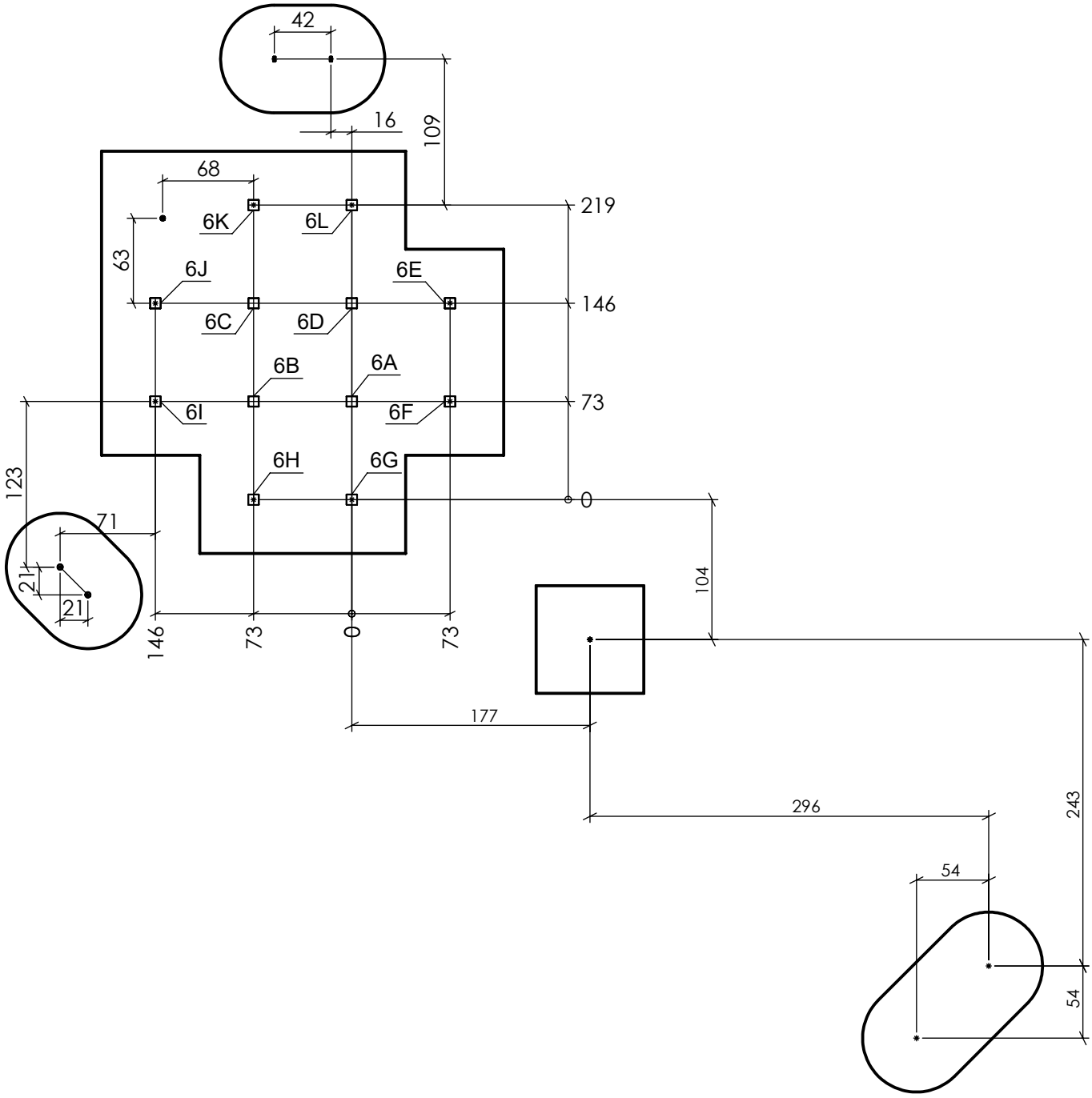

[cm]

3060-1.06S2

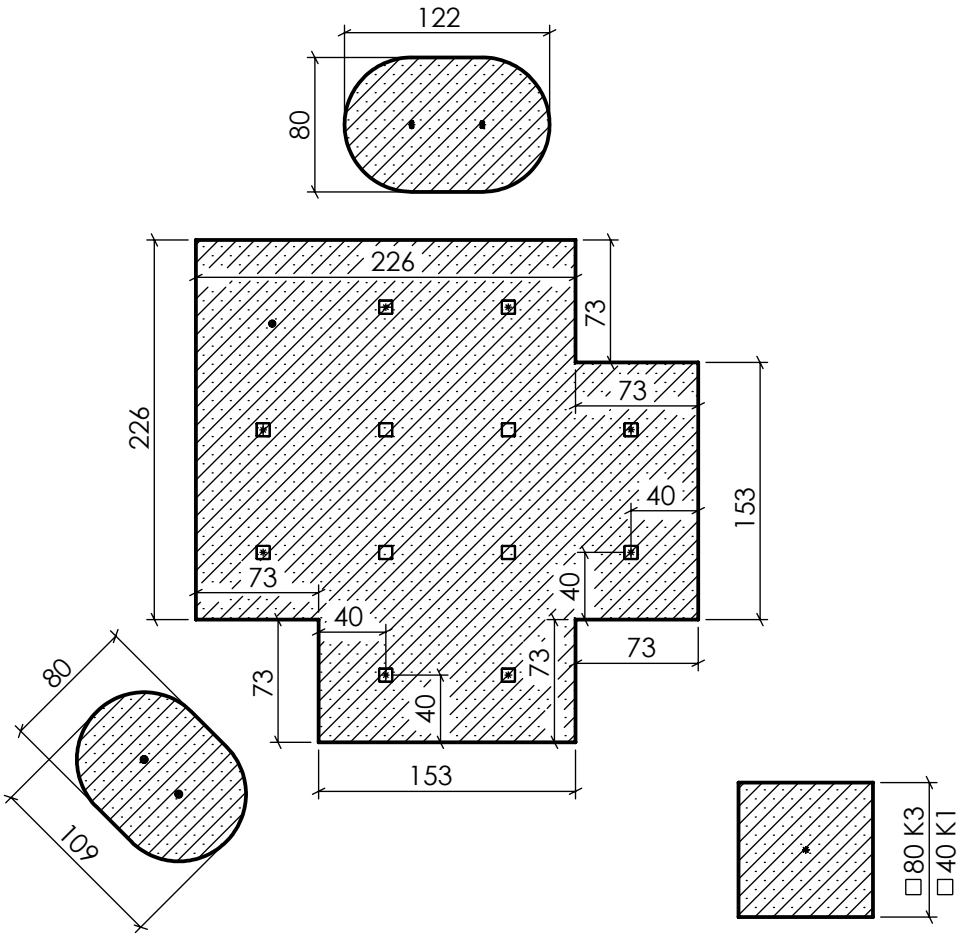

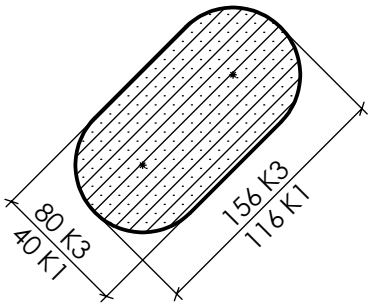

[cm]

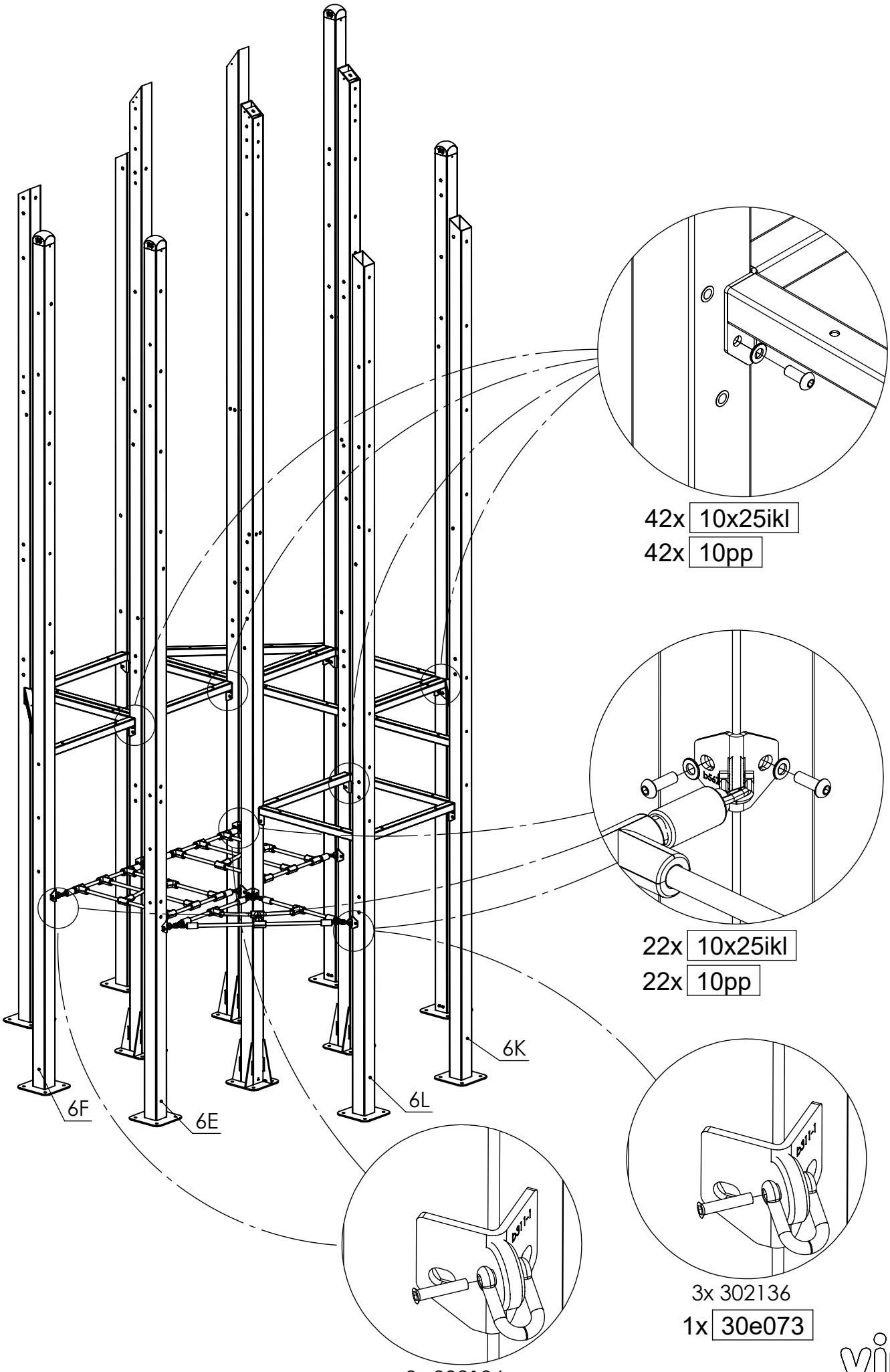

[cm]

vinci play

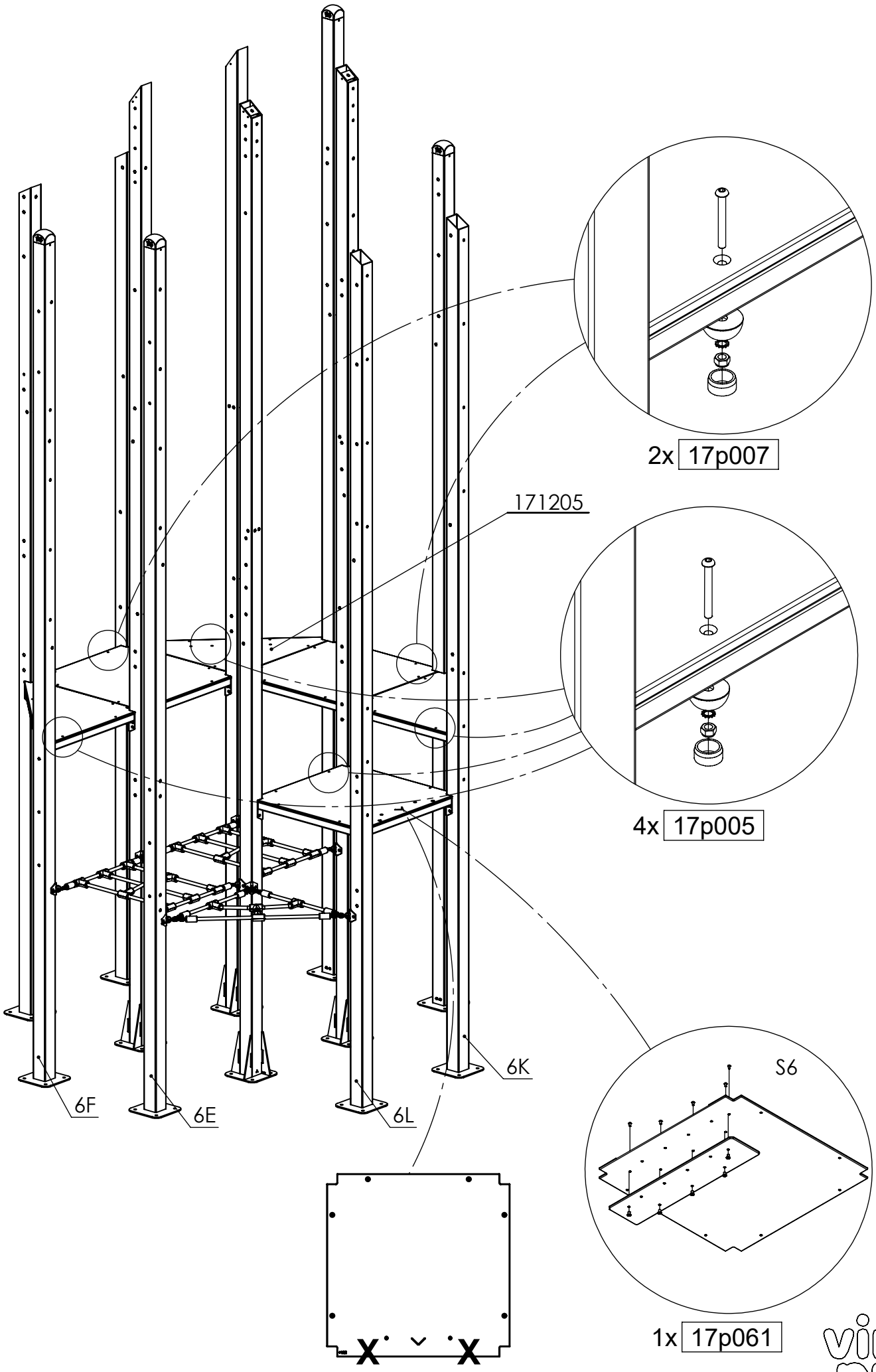
2x 17p007
171205
4x 17p005
6K
6F
6E
6L
S6
1x 17p061
[cm]

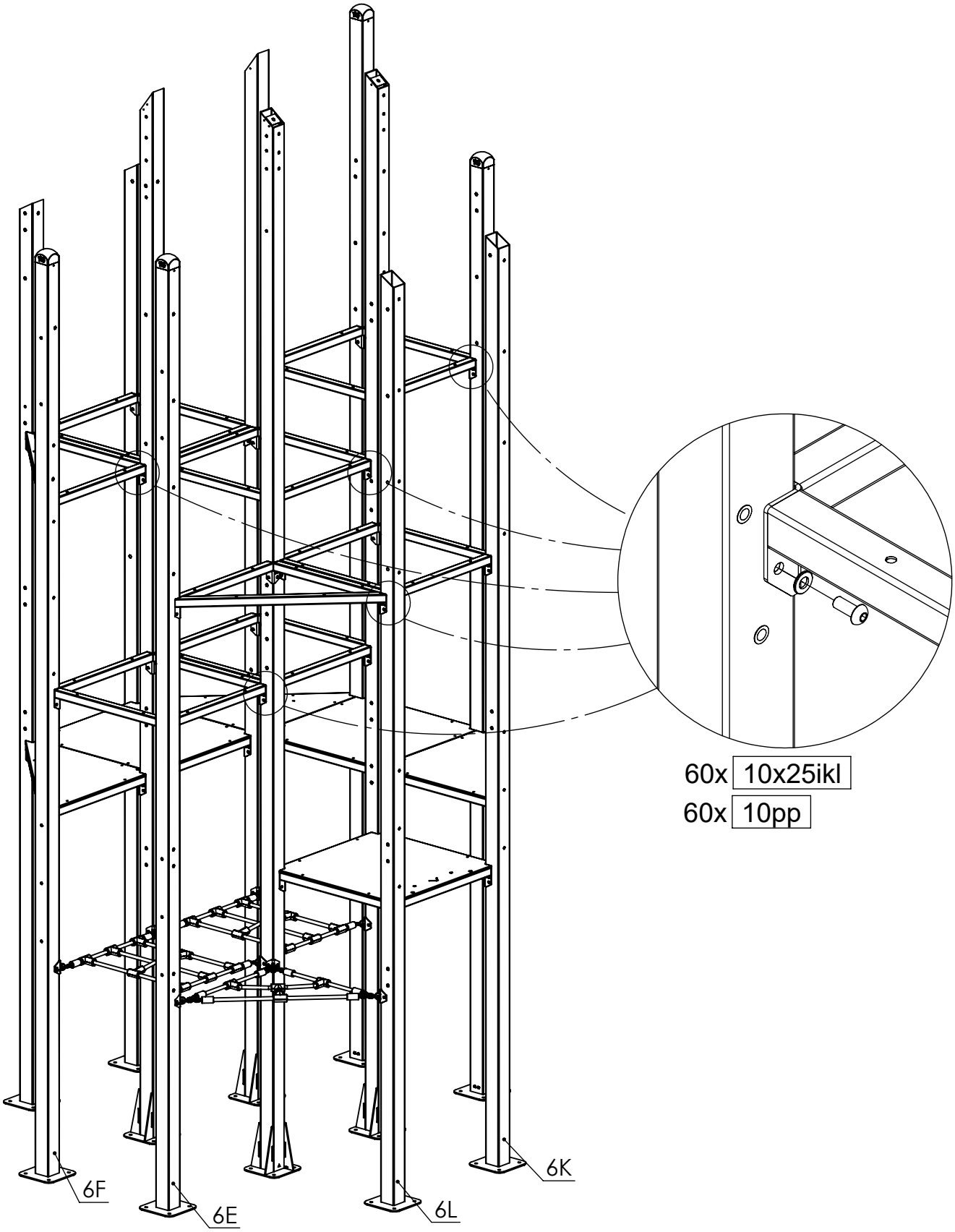

[cm]

vinci play

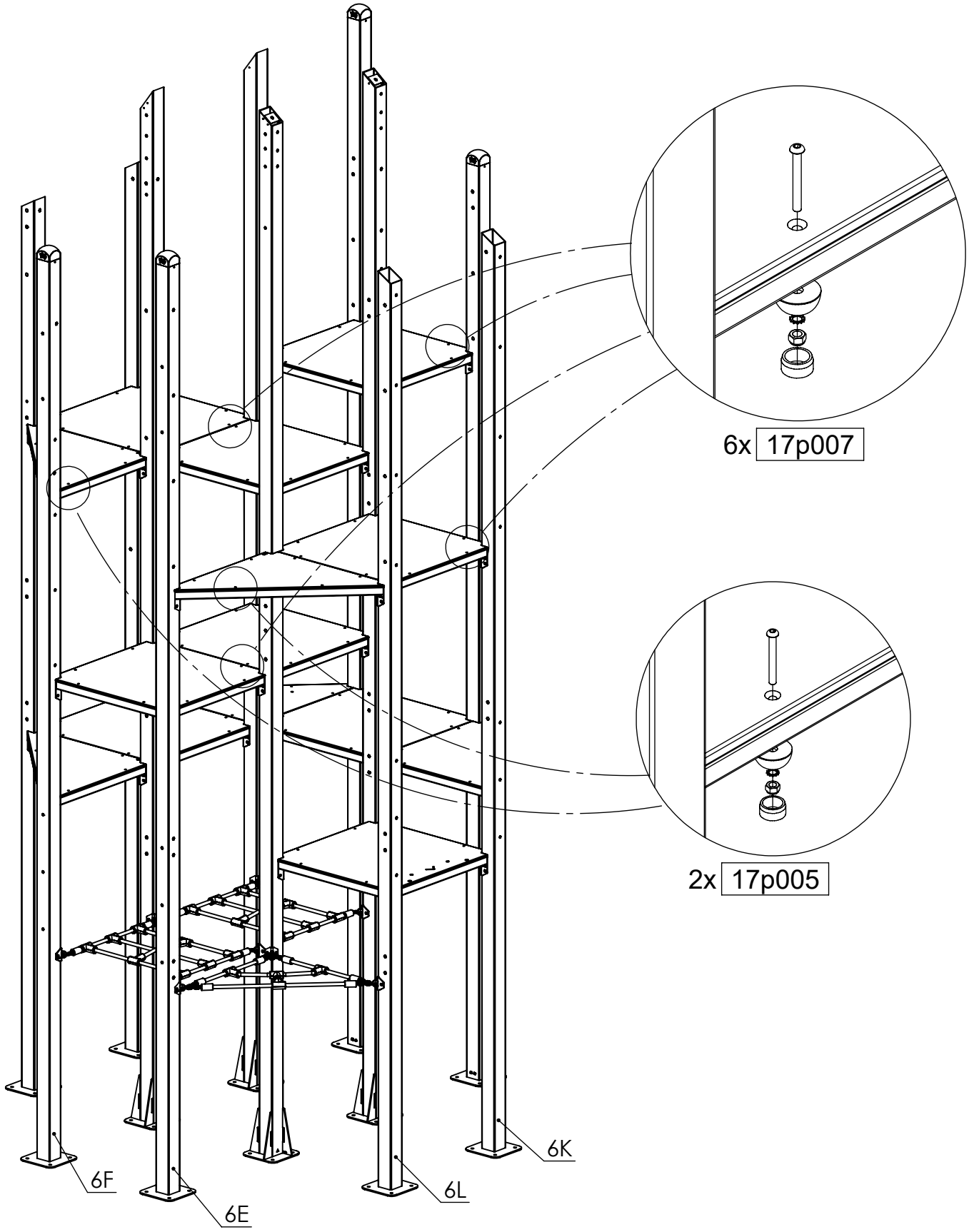

[cm]

vinci play

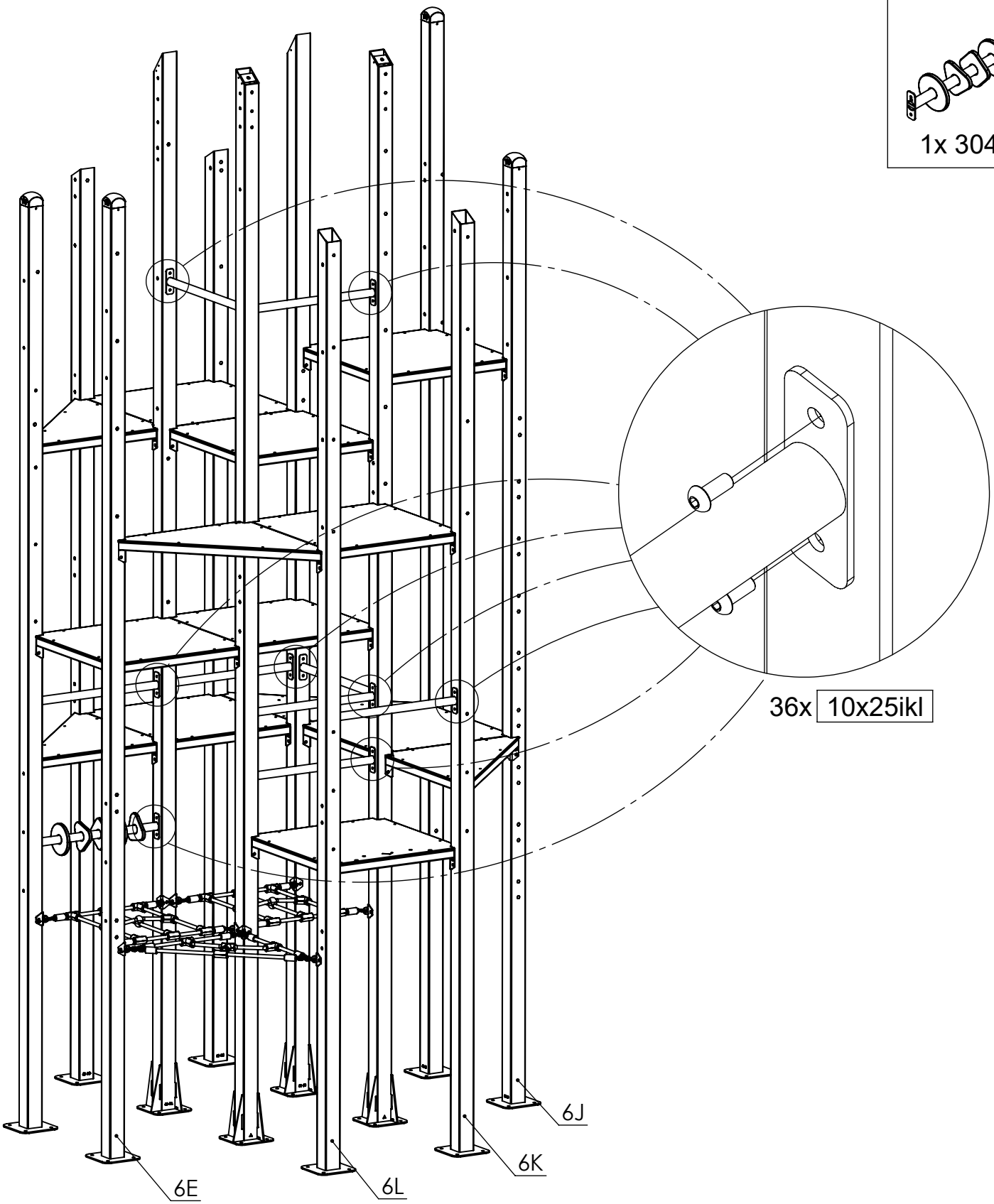

[cm]

vinci play

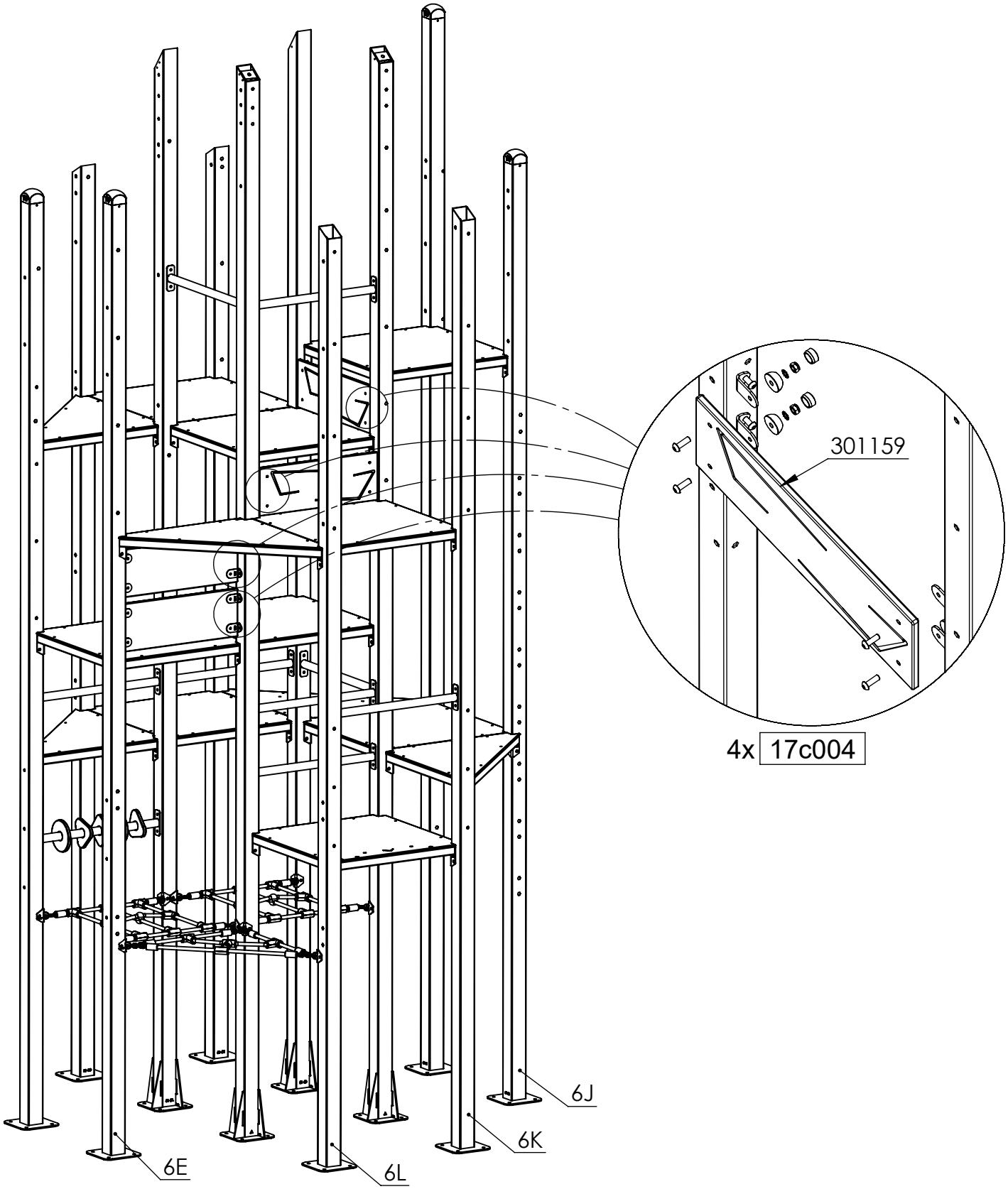

[cm]

vinci play

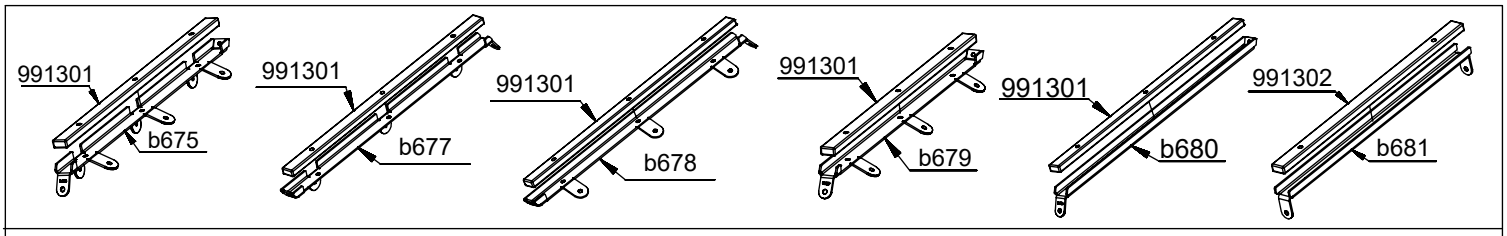

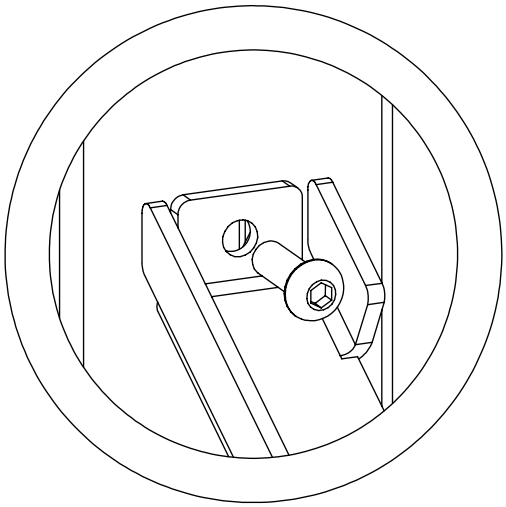

10x 8x25ikl

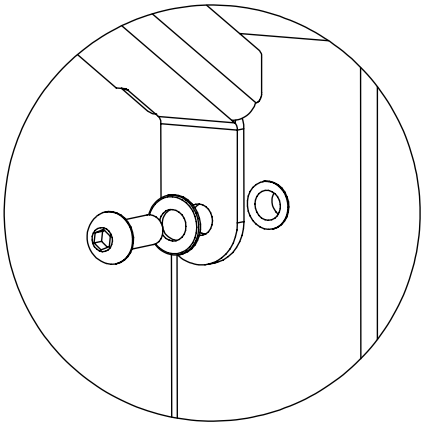

16x 10x25ikl
16x 10pp

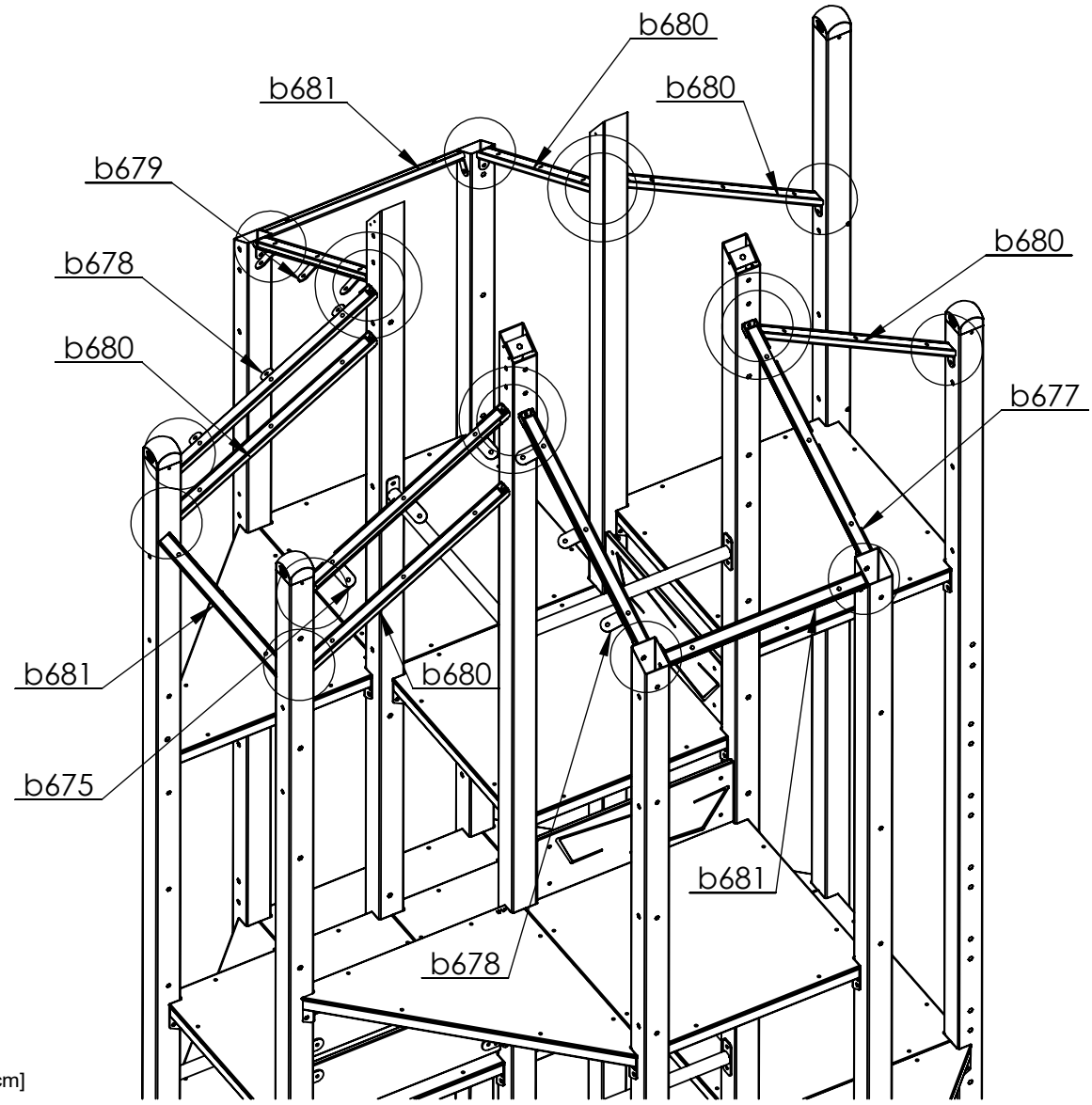

[cm]

vinci play

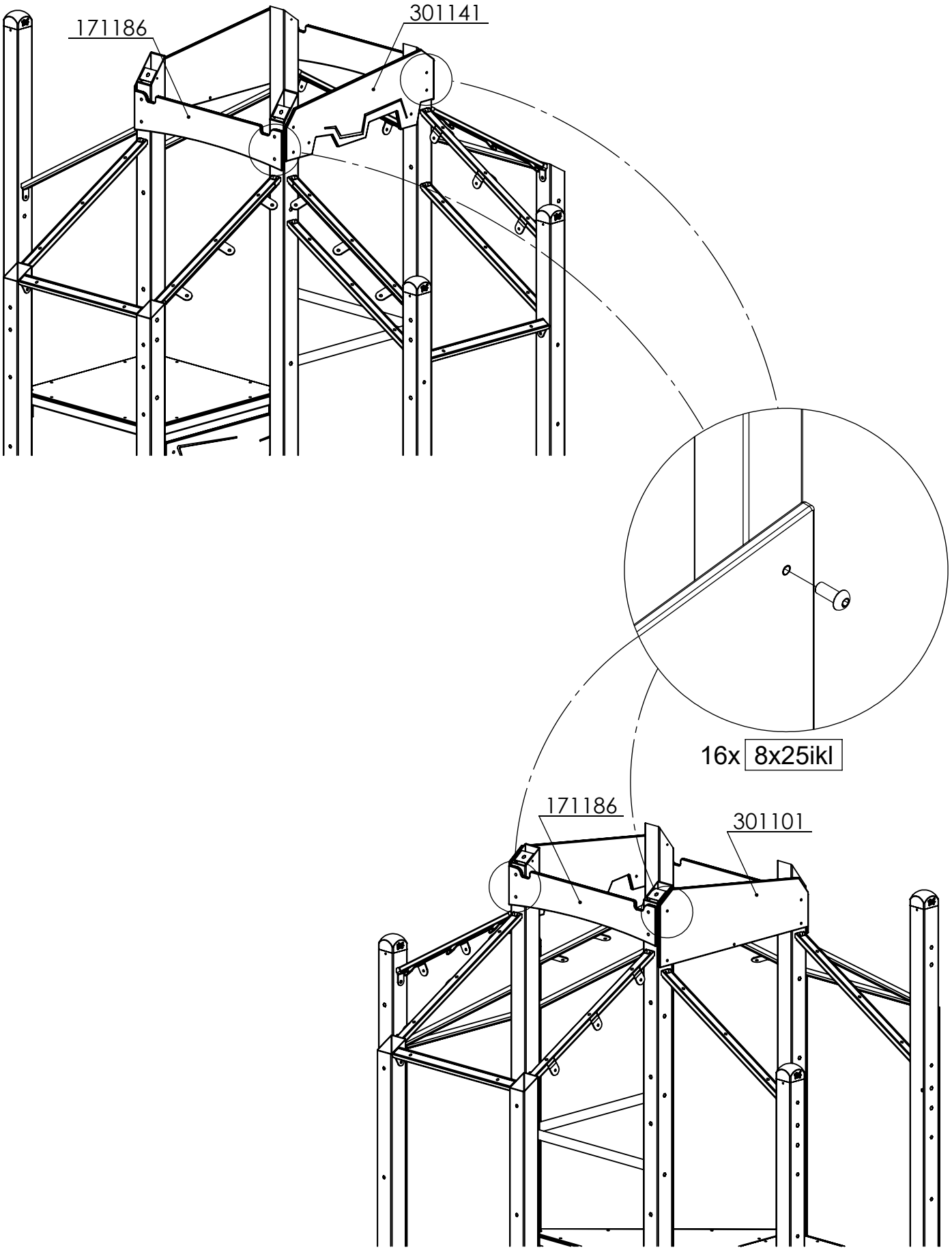

[cm]

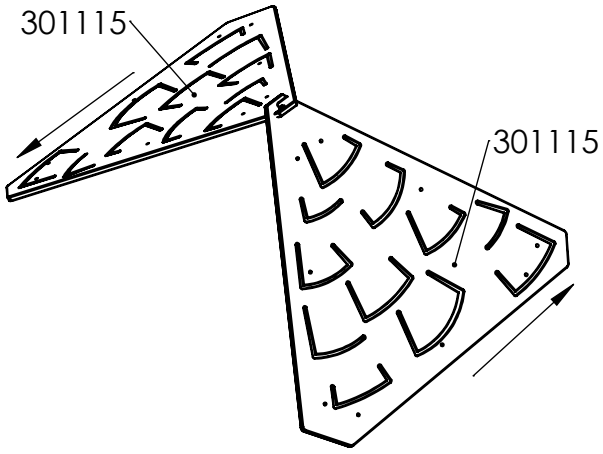

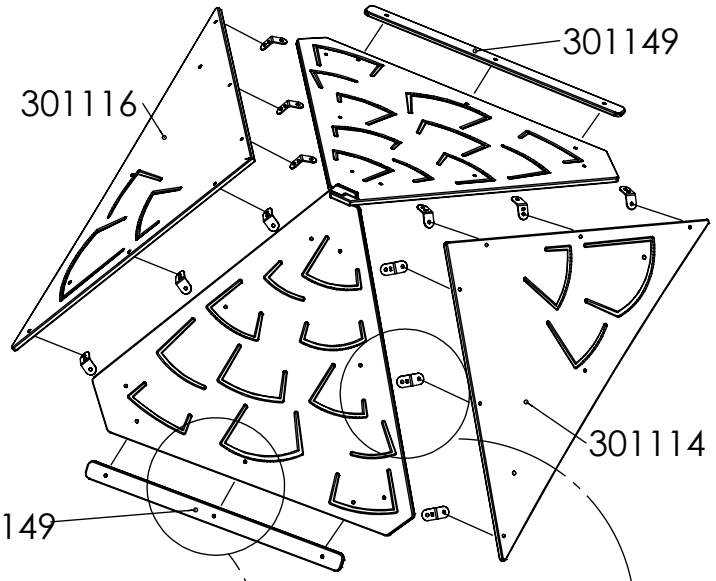

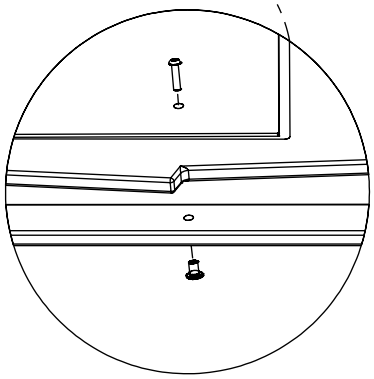

2x 30c152

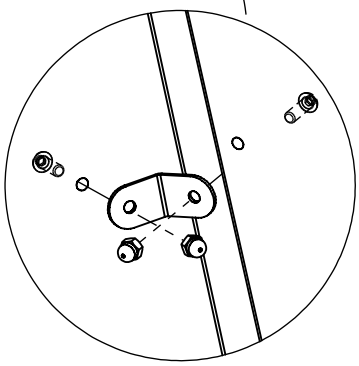

1x 30c058

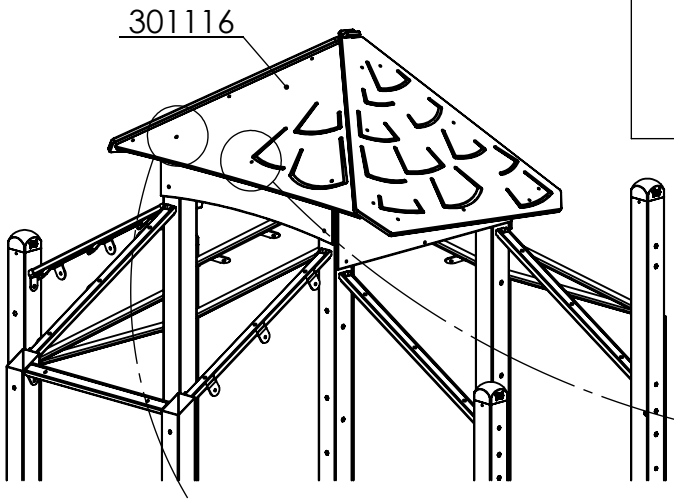

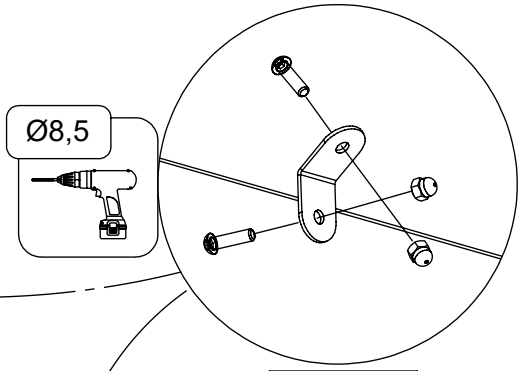

1x 30c154

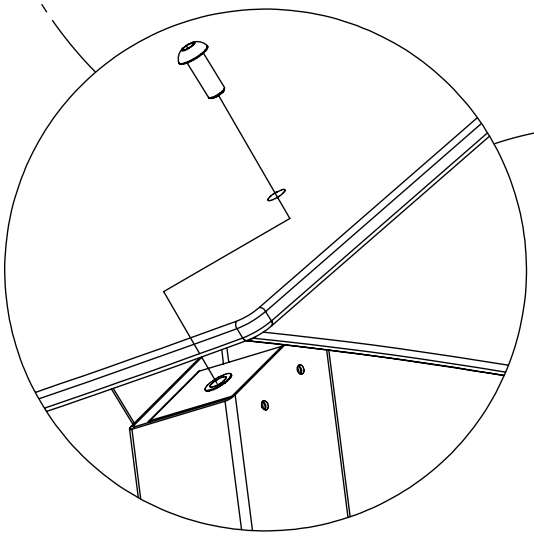

4x 10x30ikl

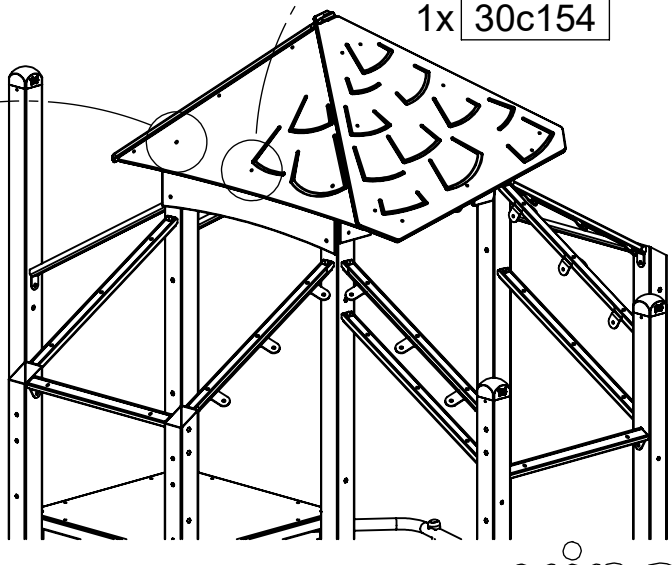

[cm]

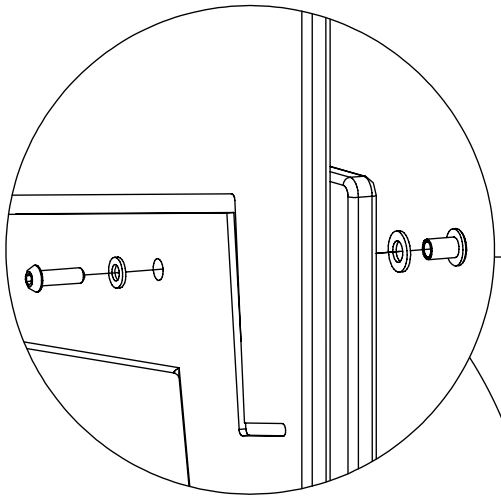

1x 30c108

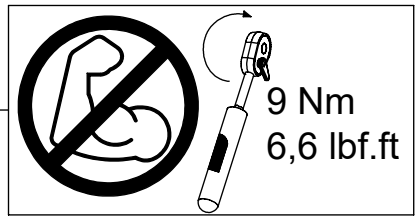

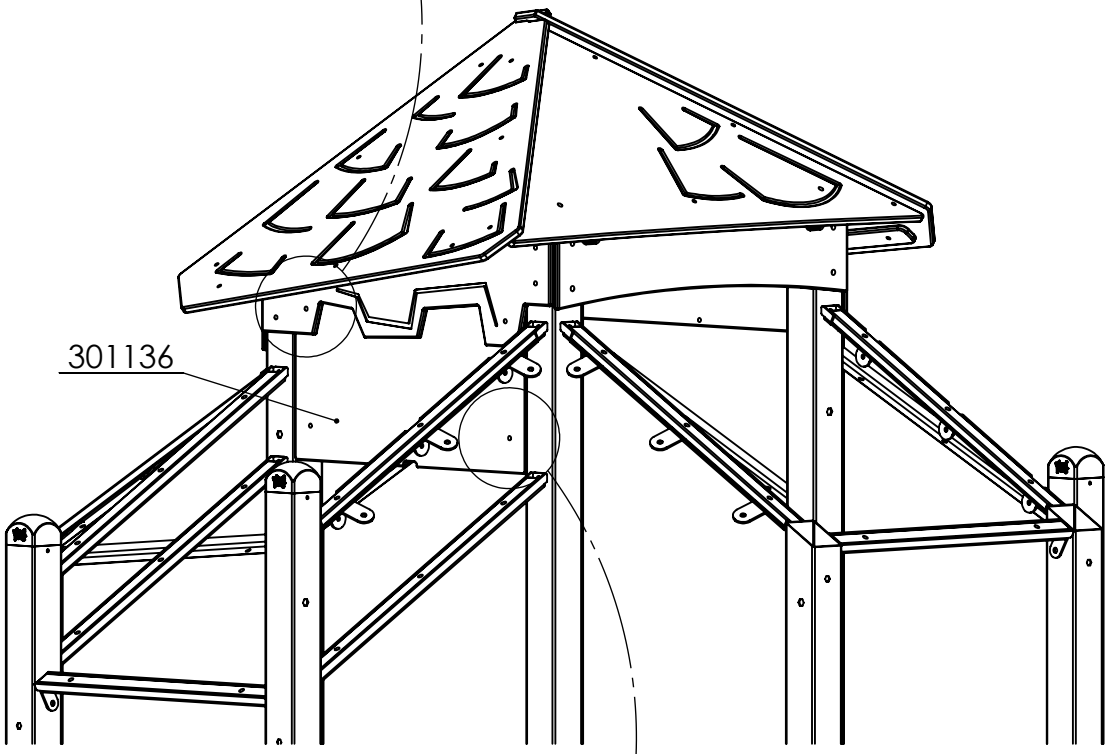

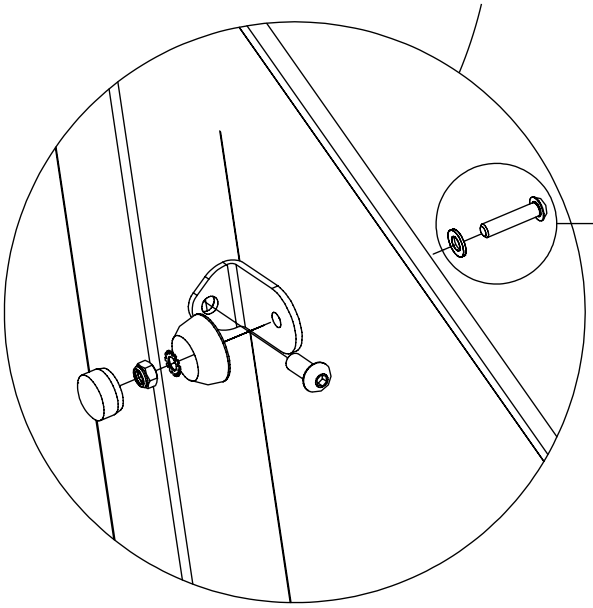

1x 30e058

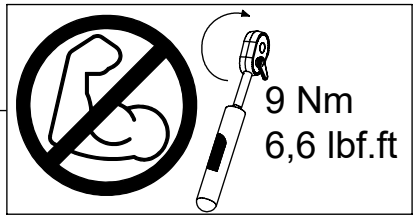

[cm]

vinci play

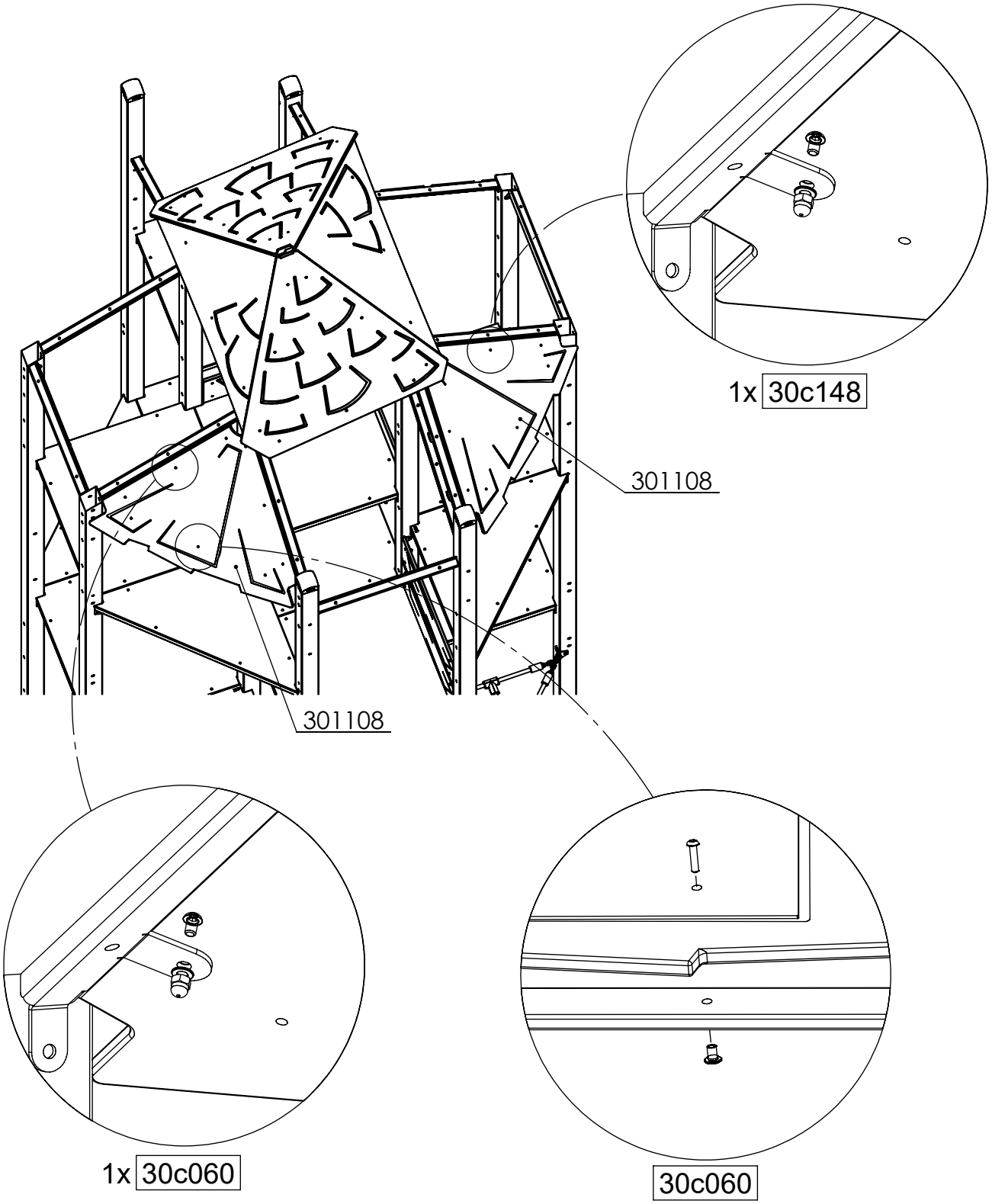

[cm]

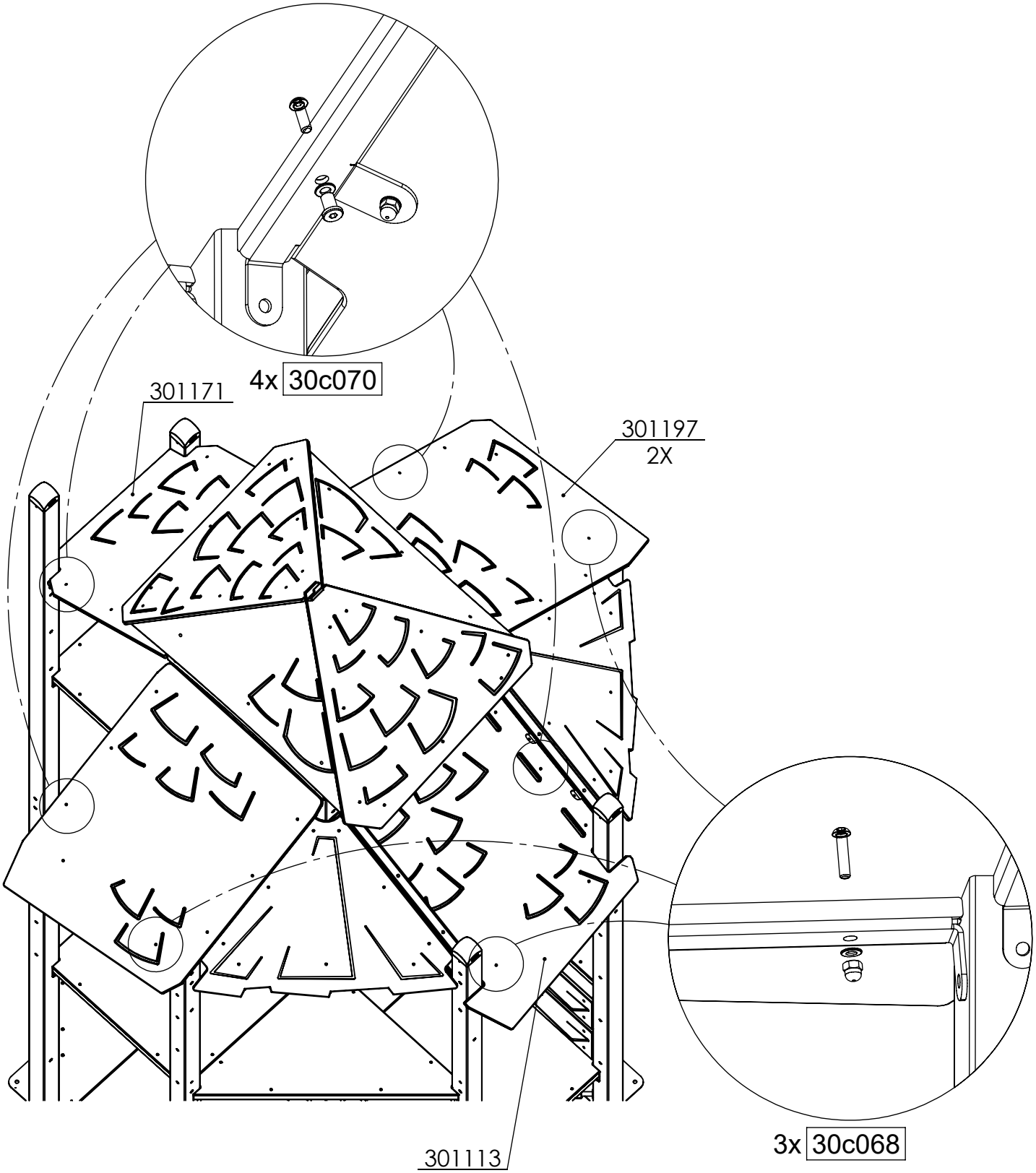

[cm]

vinci play

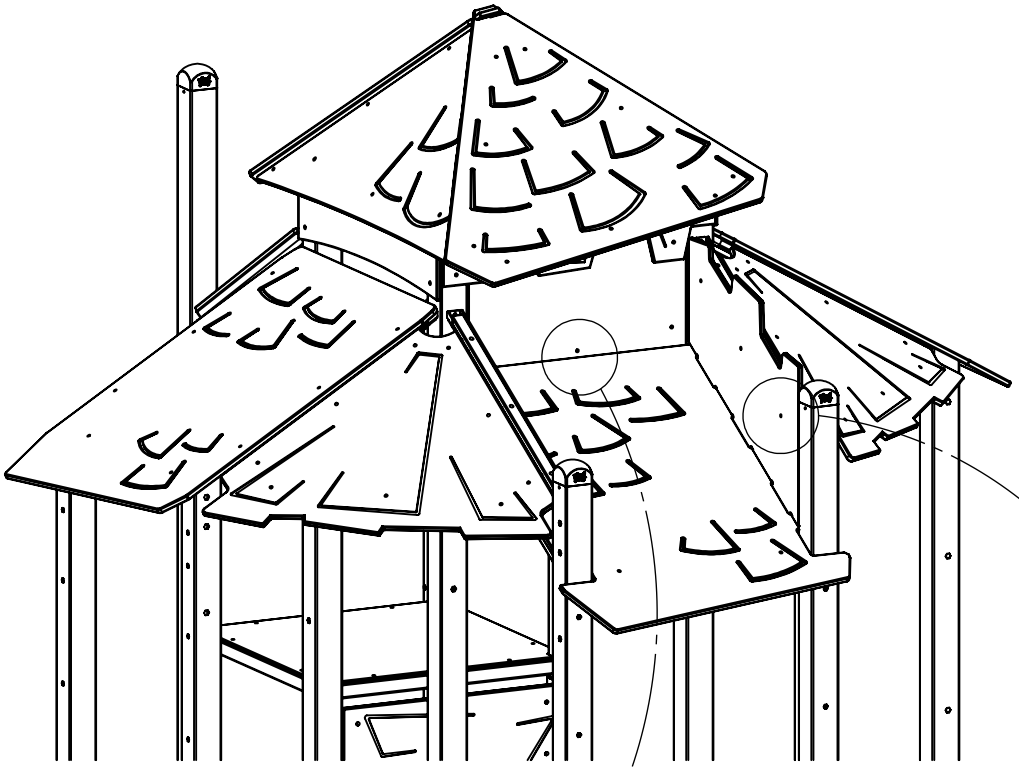

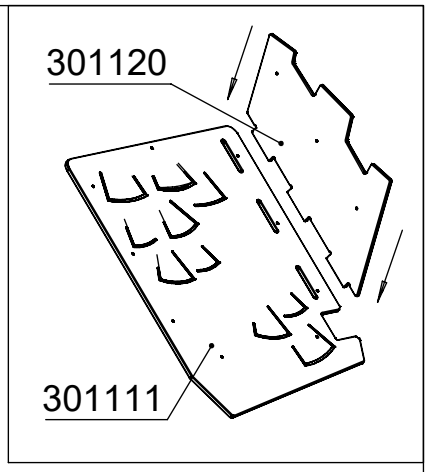

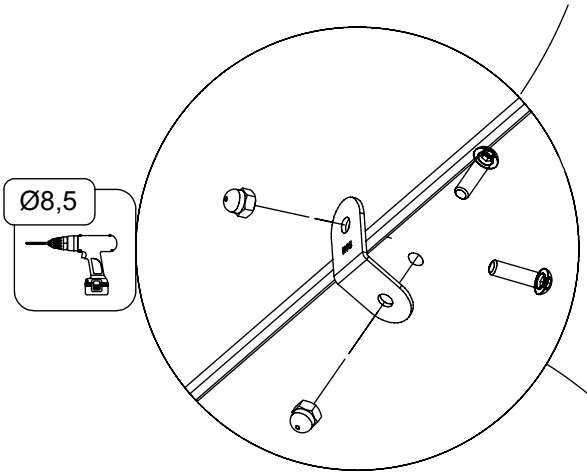

2x 30c124

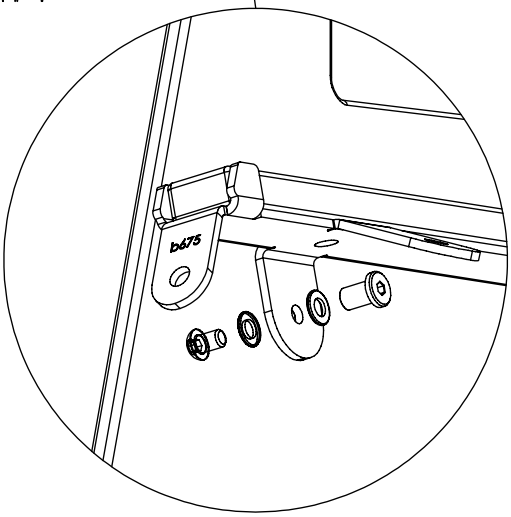

1x 30c106

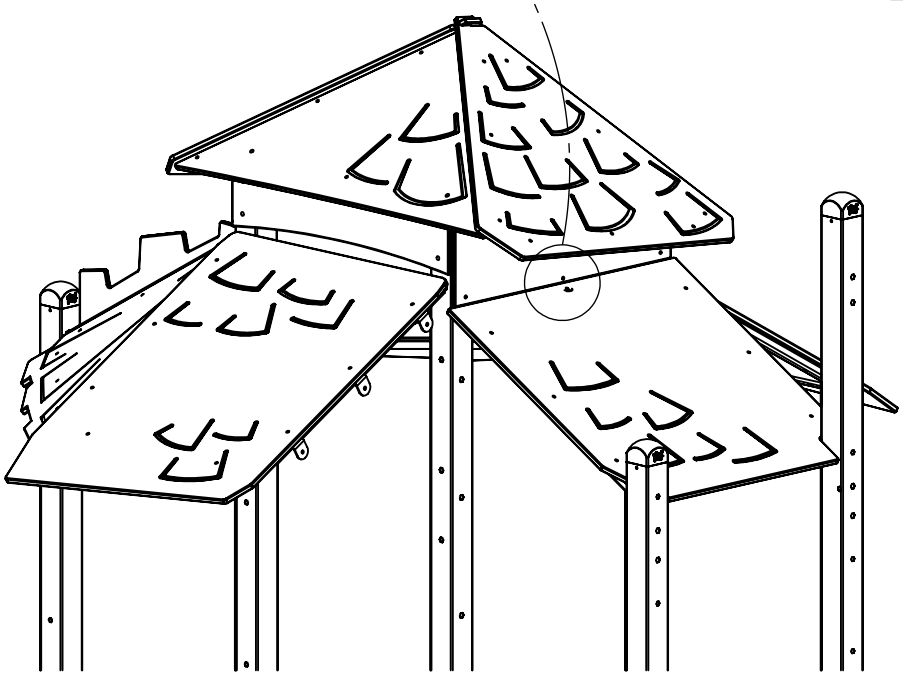

[cm]

vinci play

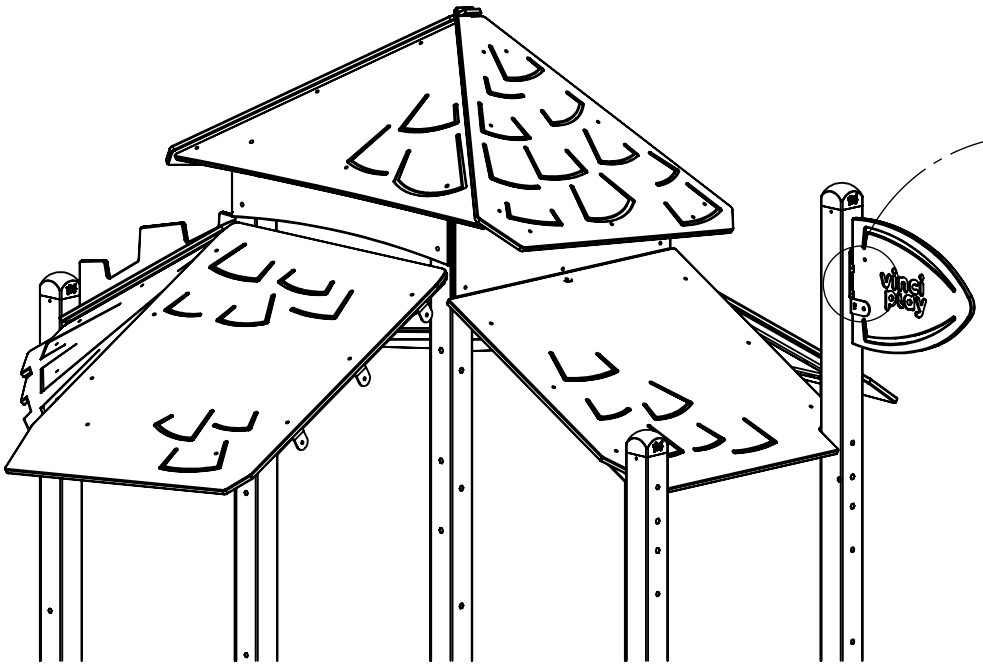

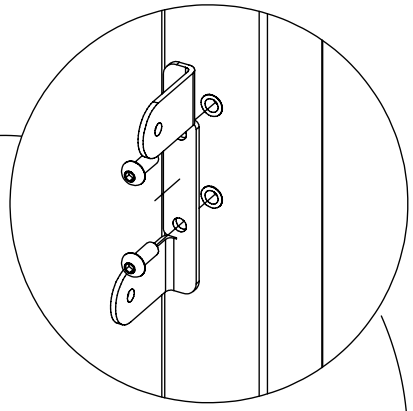

1x E15

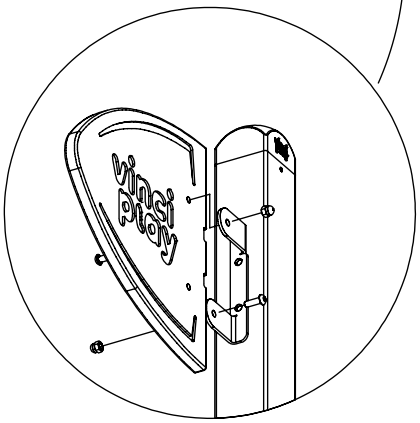

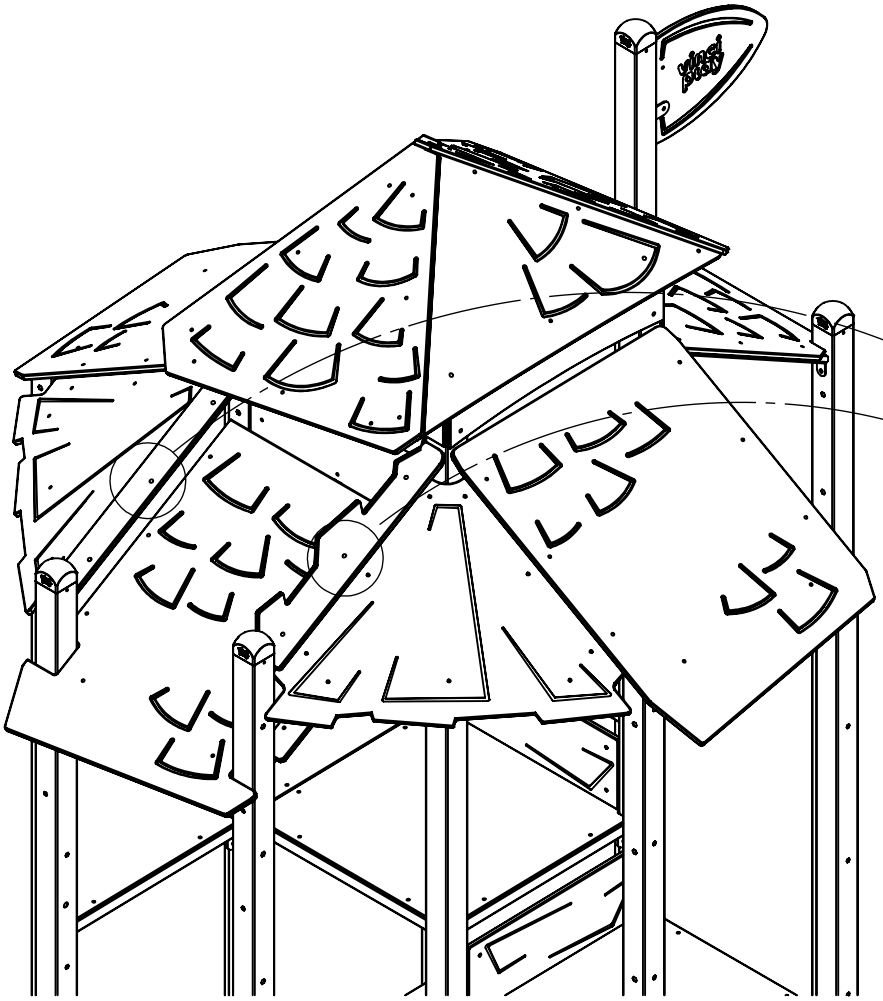

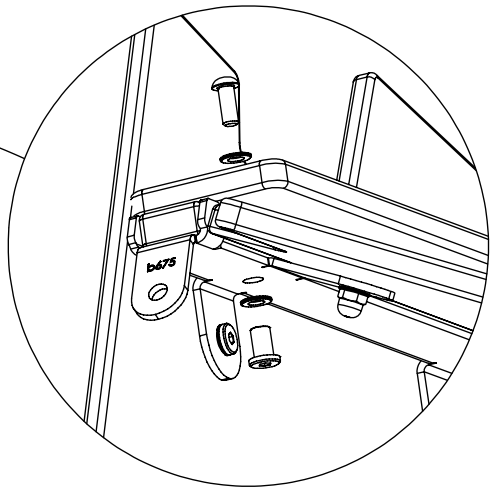

2x 30c110

[cm]

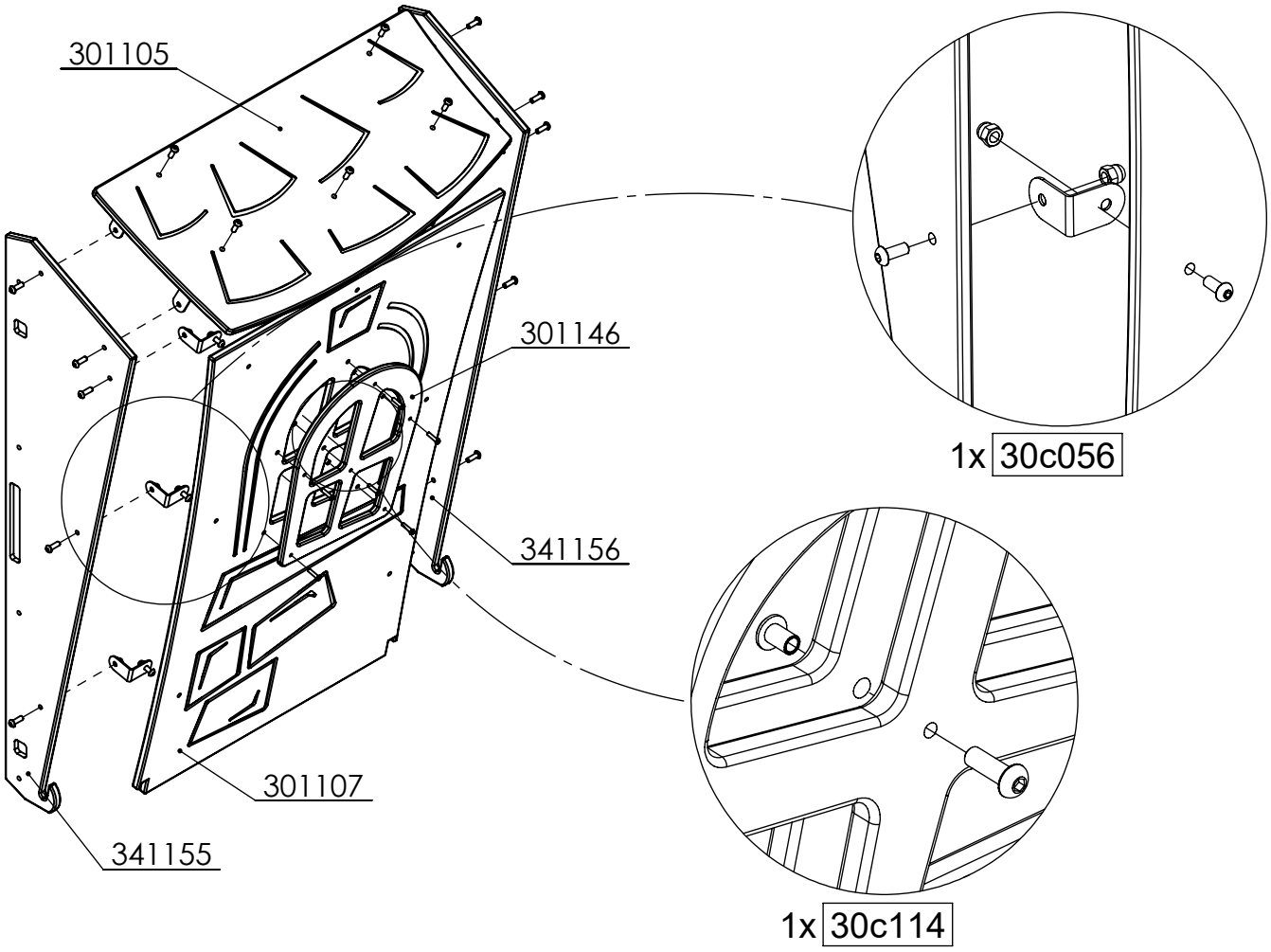
301105
301146
341156
301107
341155
1x 30c056
1x 30c114

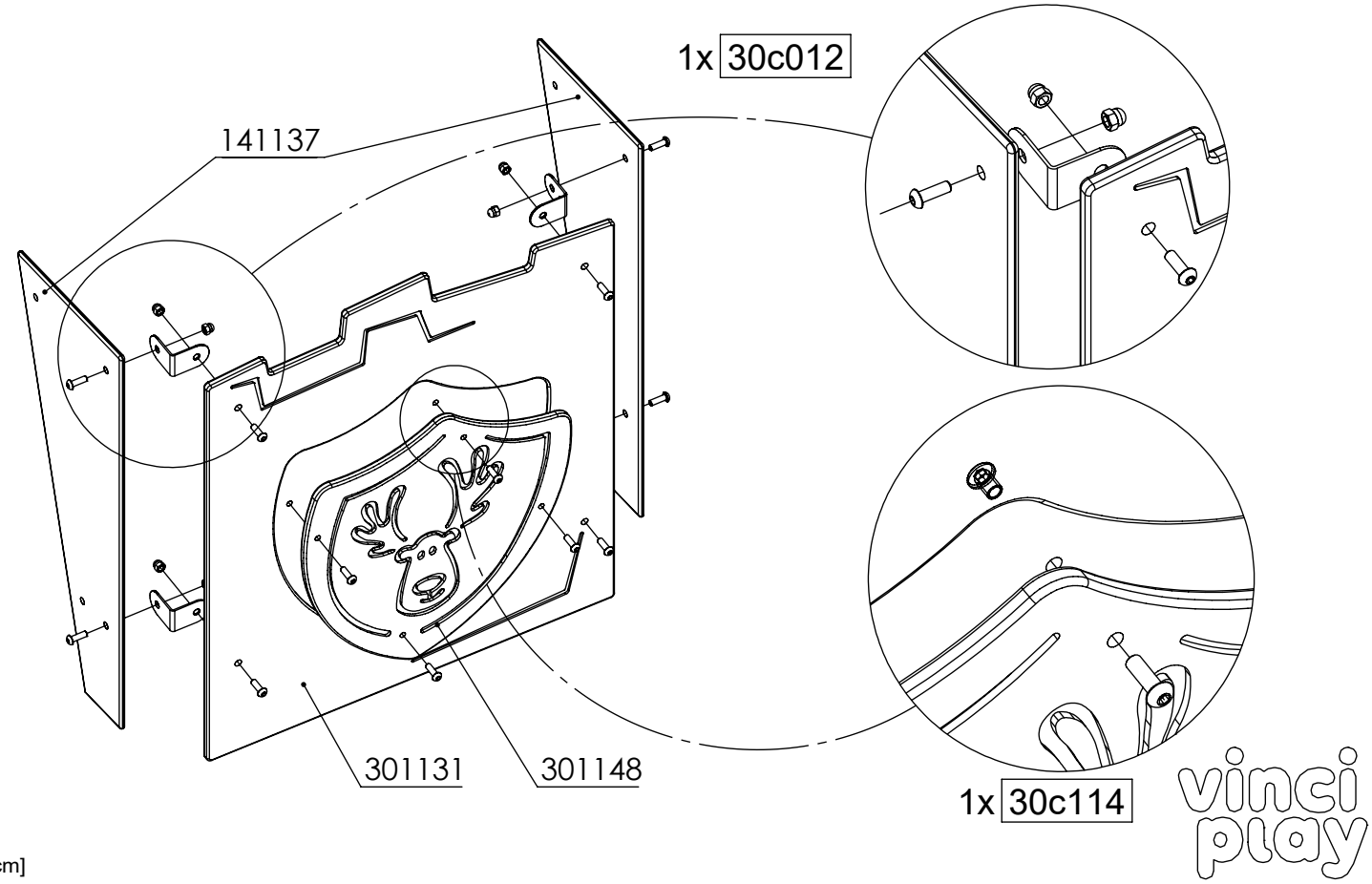
1x 30c012
141137
301131
301148
1x 30c114
vinci play
[cm]

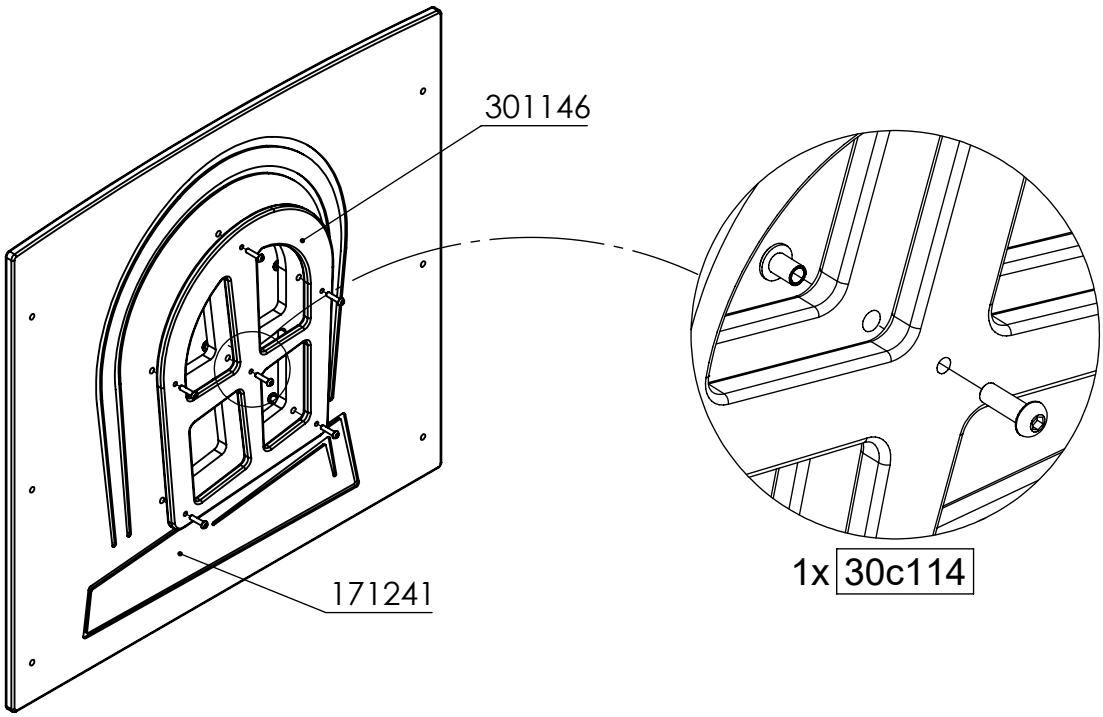

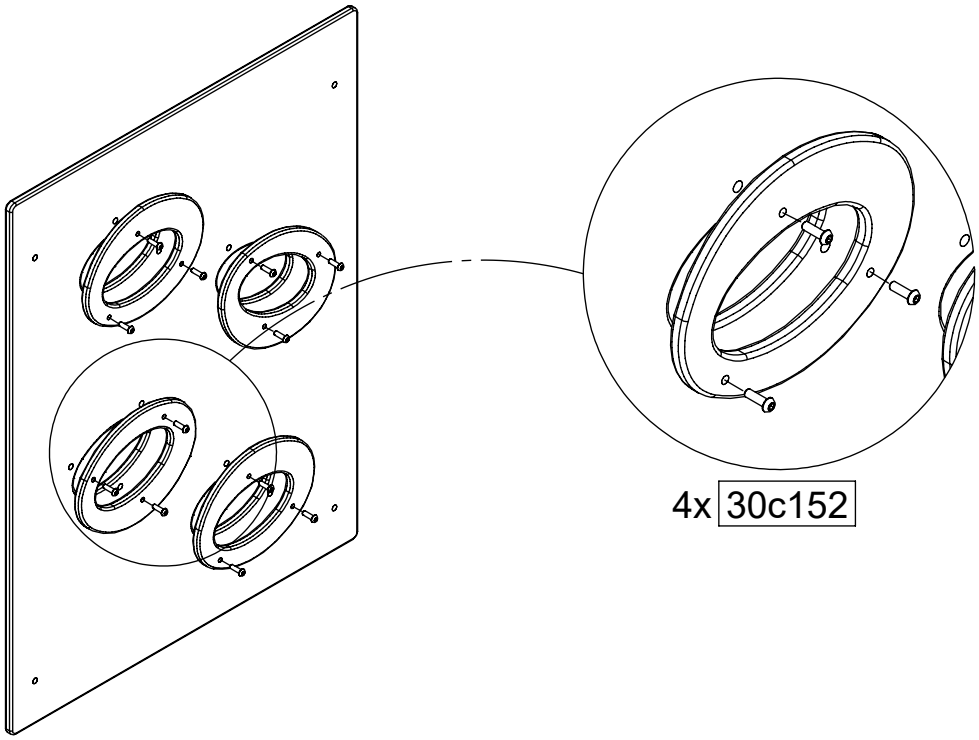

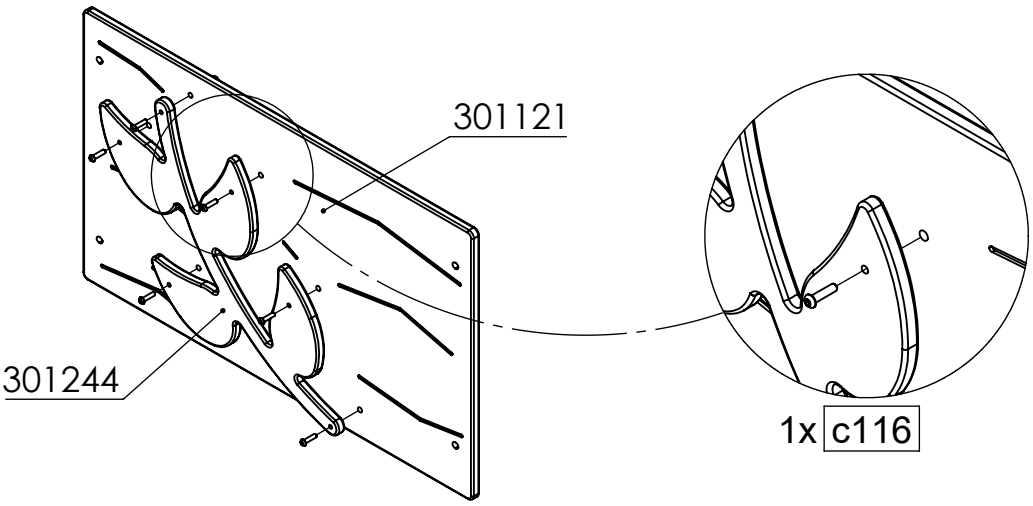

[cm]

vinci play

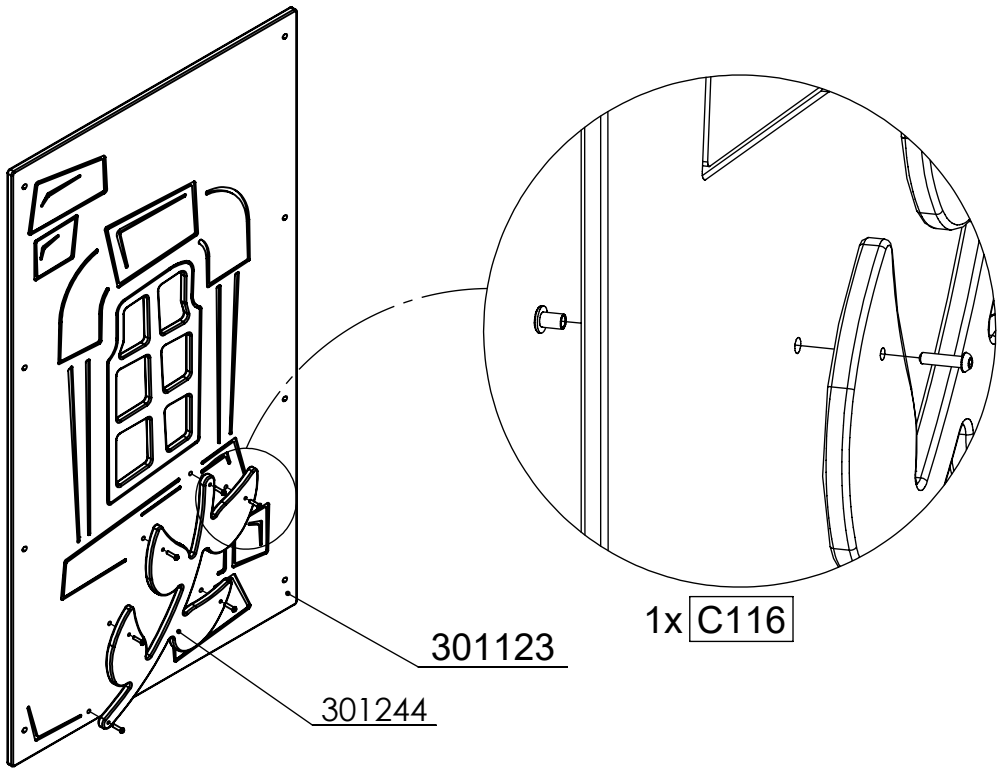

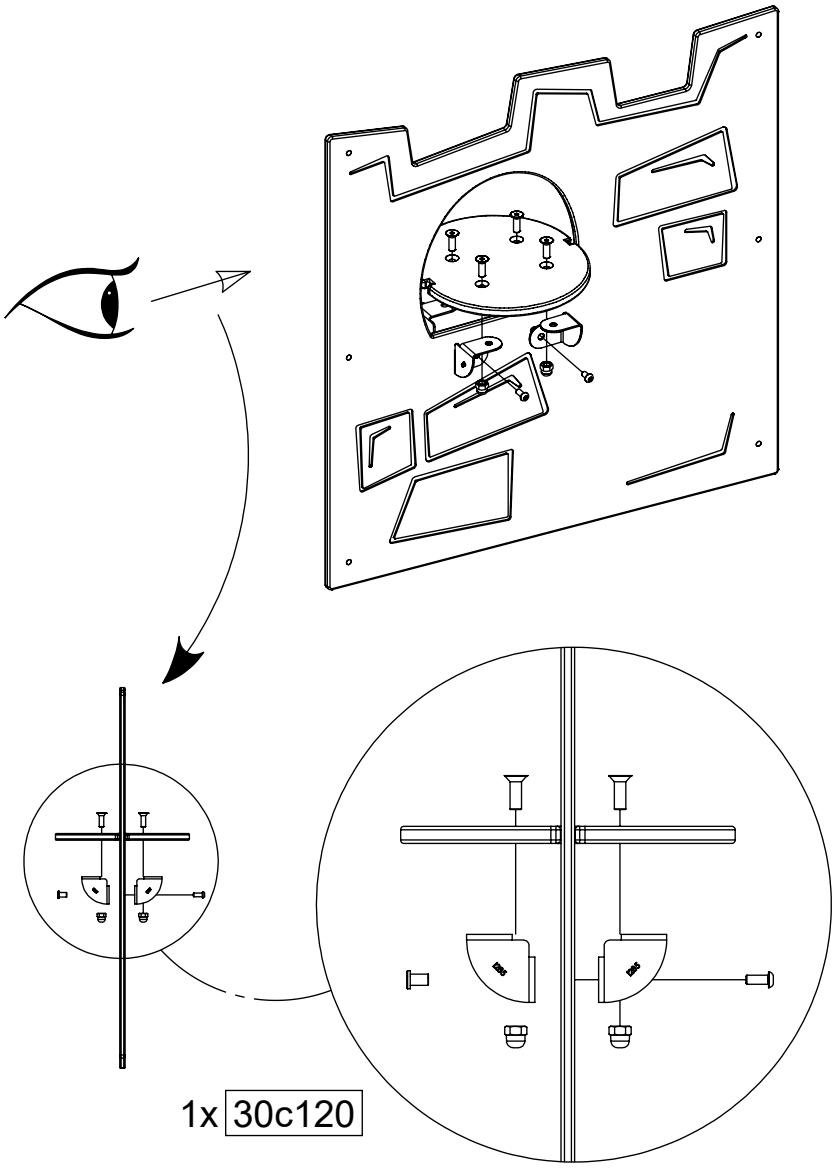

[cm]

vinci play

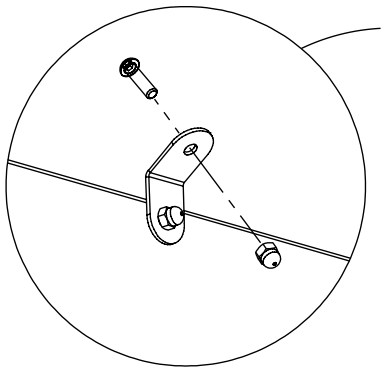

30c148

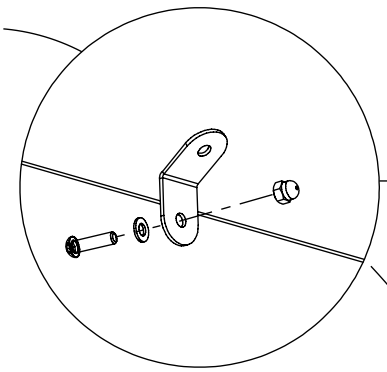

1x 30e080

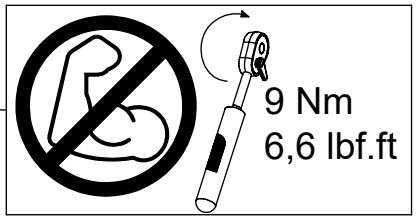

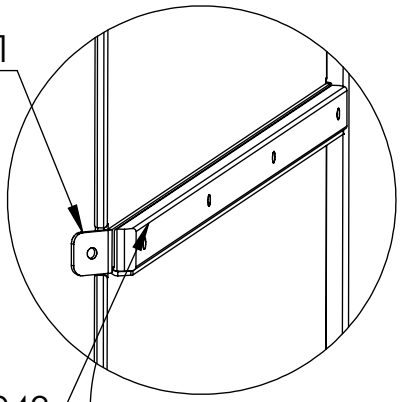

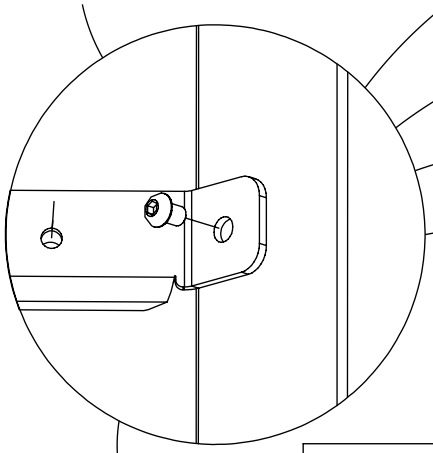

1x 30e072

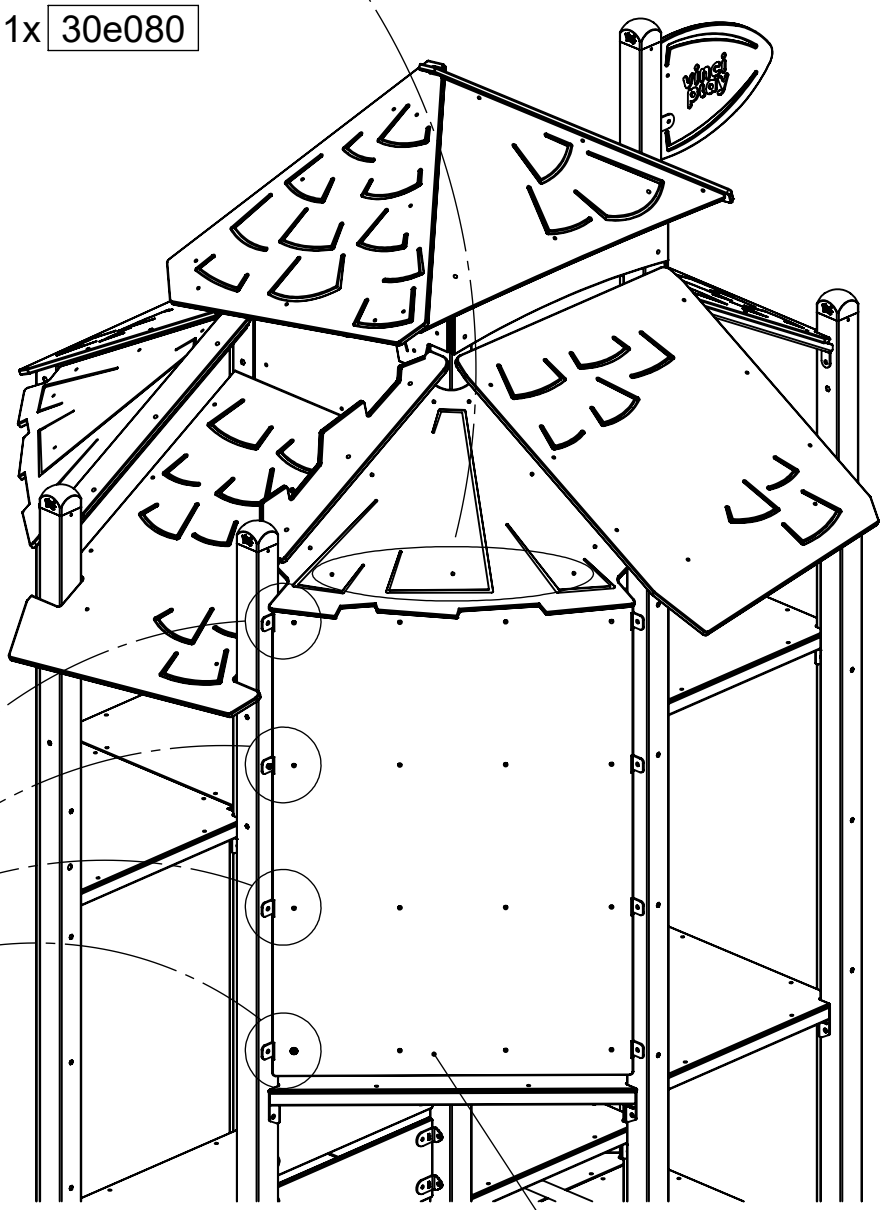

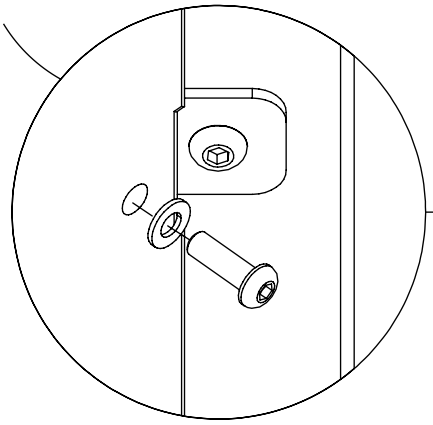

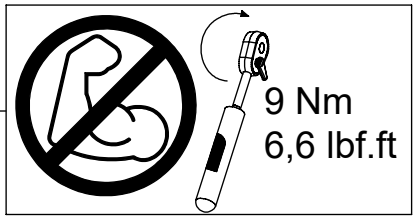

[cm]

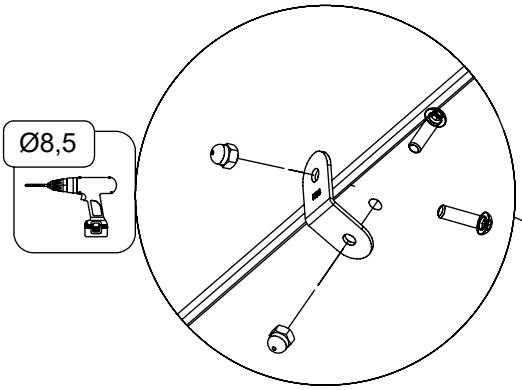

1x 30c124

301121

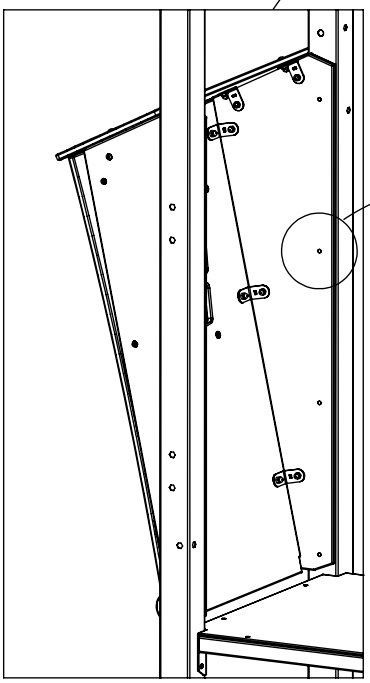

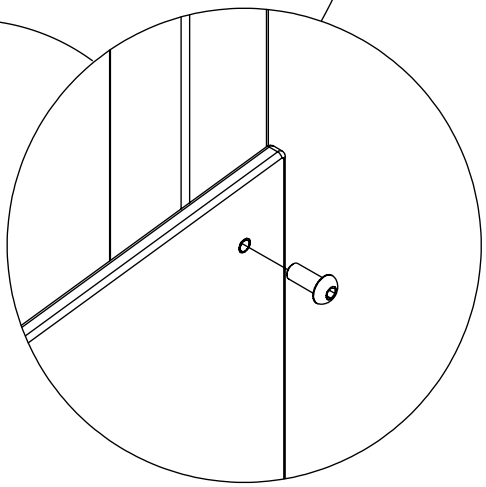

12x 8x30ikl

[cm]

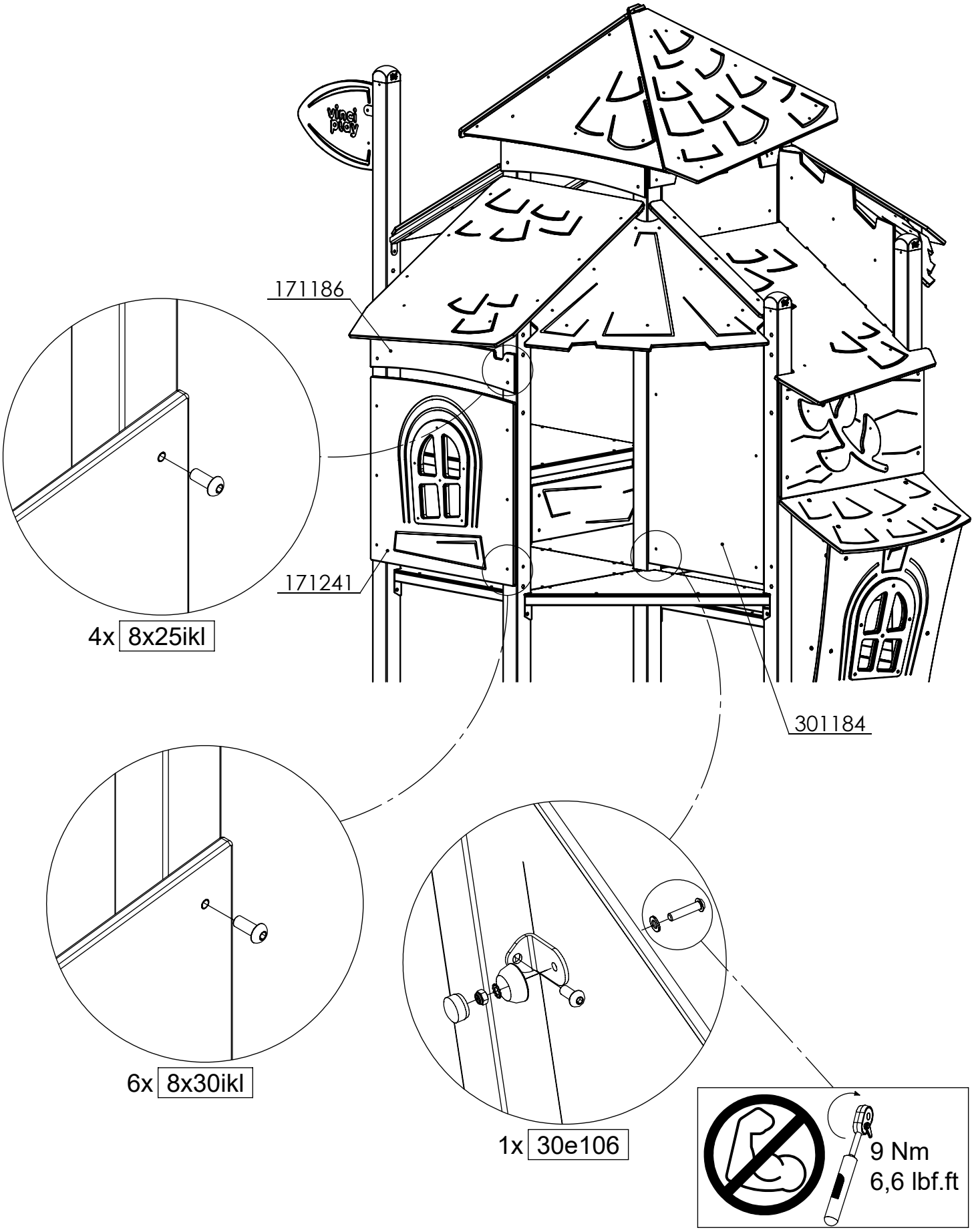
171186
171241
301184
4x 8x25ikl
6x 8x30ikl
1x 30e106
9 Nm
6,6 lbf.ft

[cm]

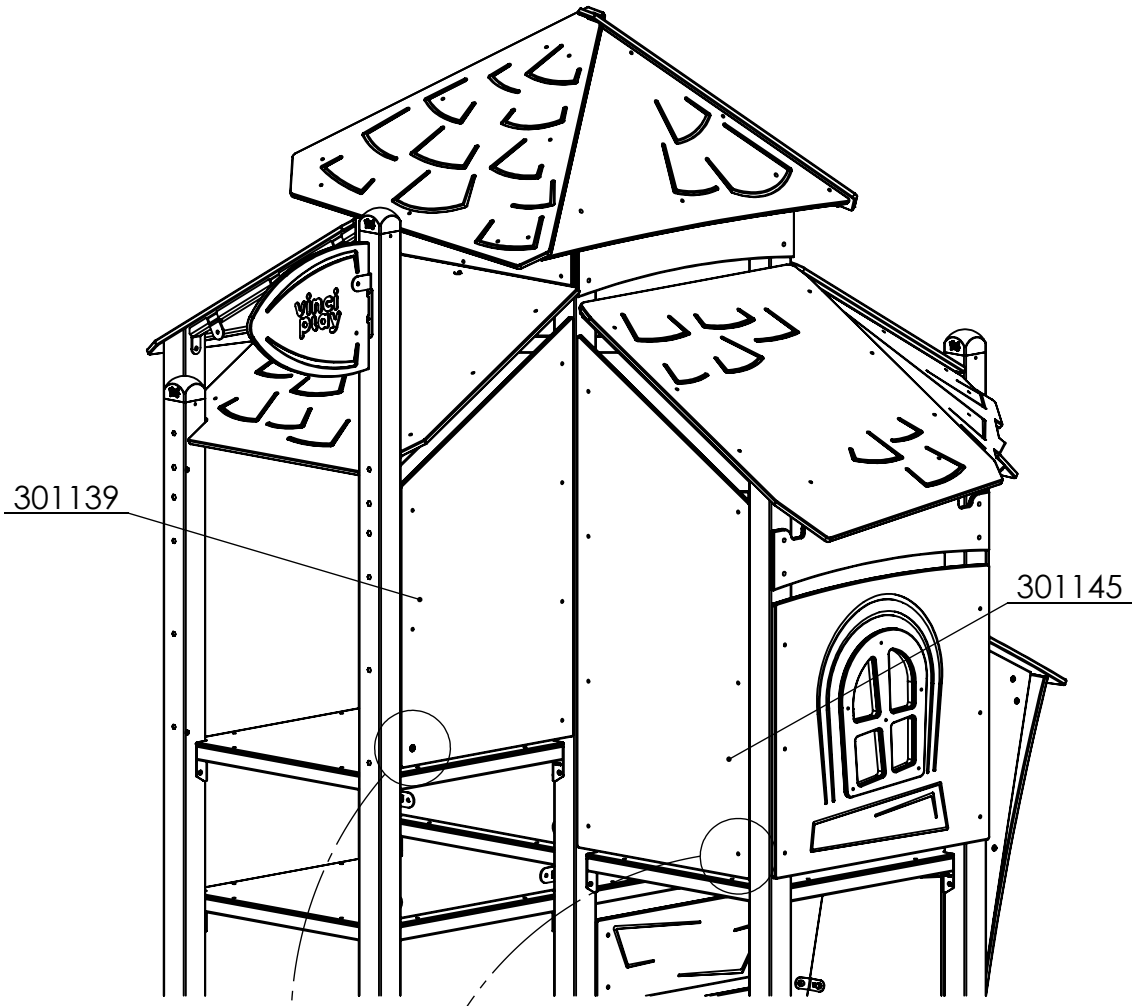

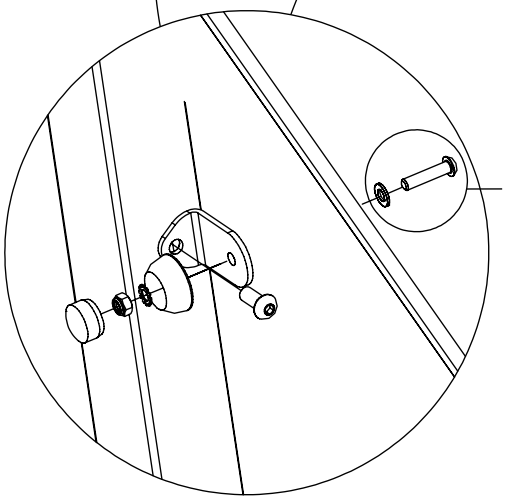

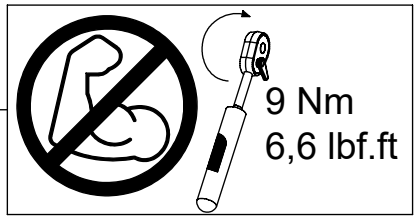

2x 30e067

[cm]

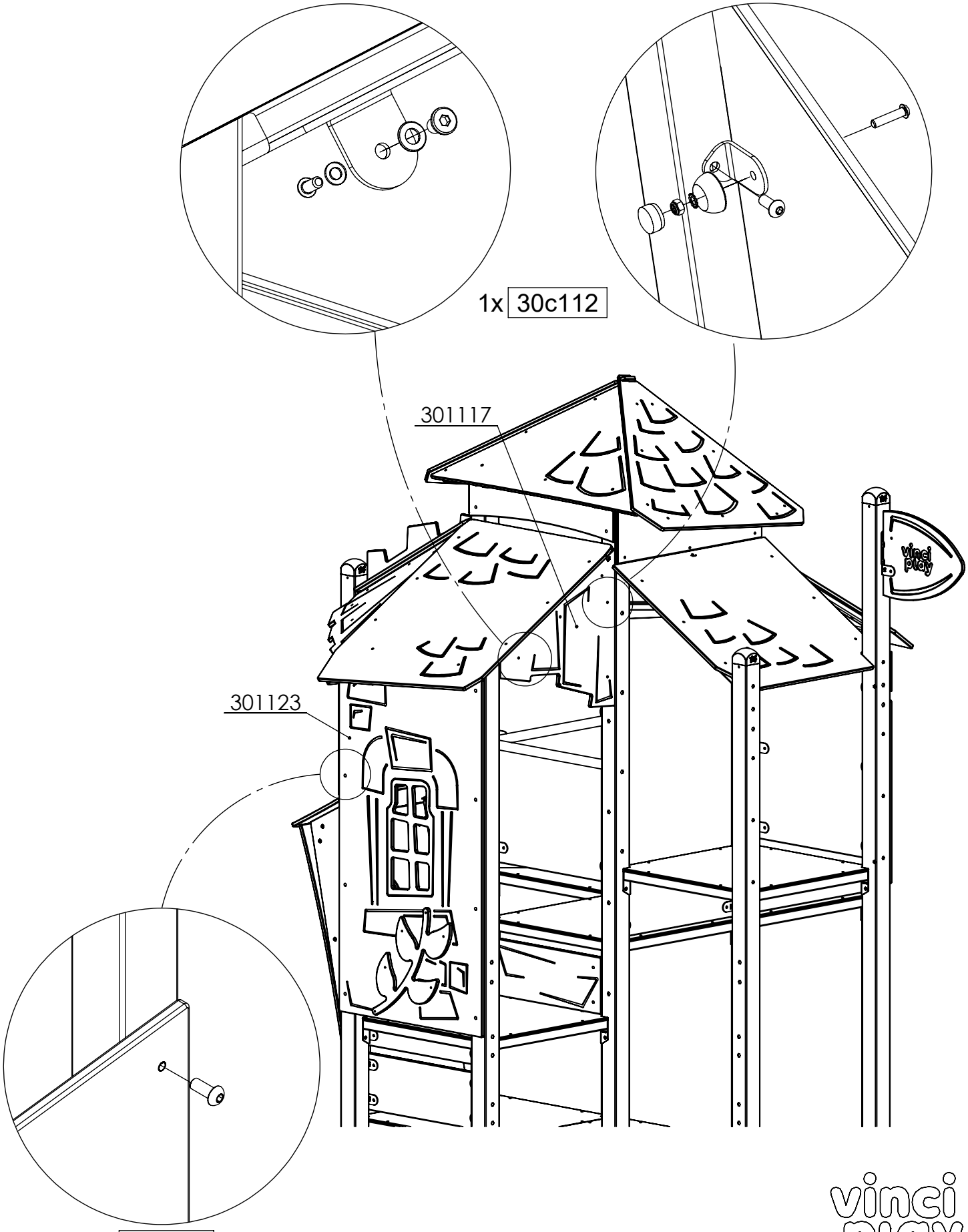
1x 30c112
301117
301123
8x 8x30ikl
[cm]
vinci play

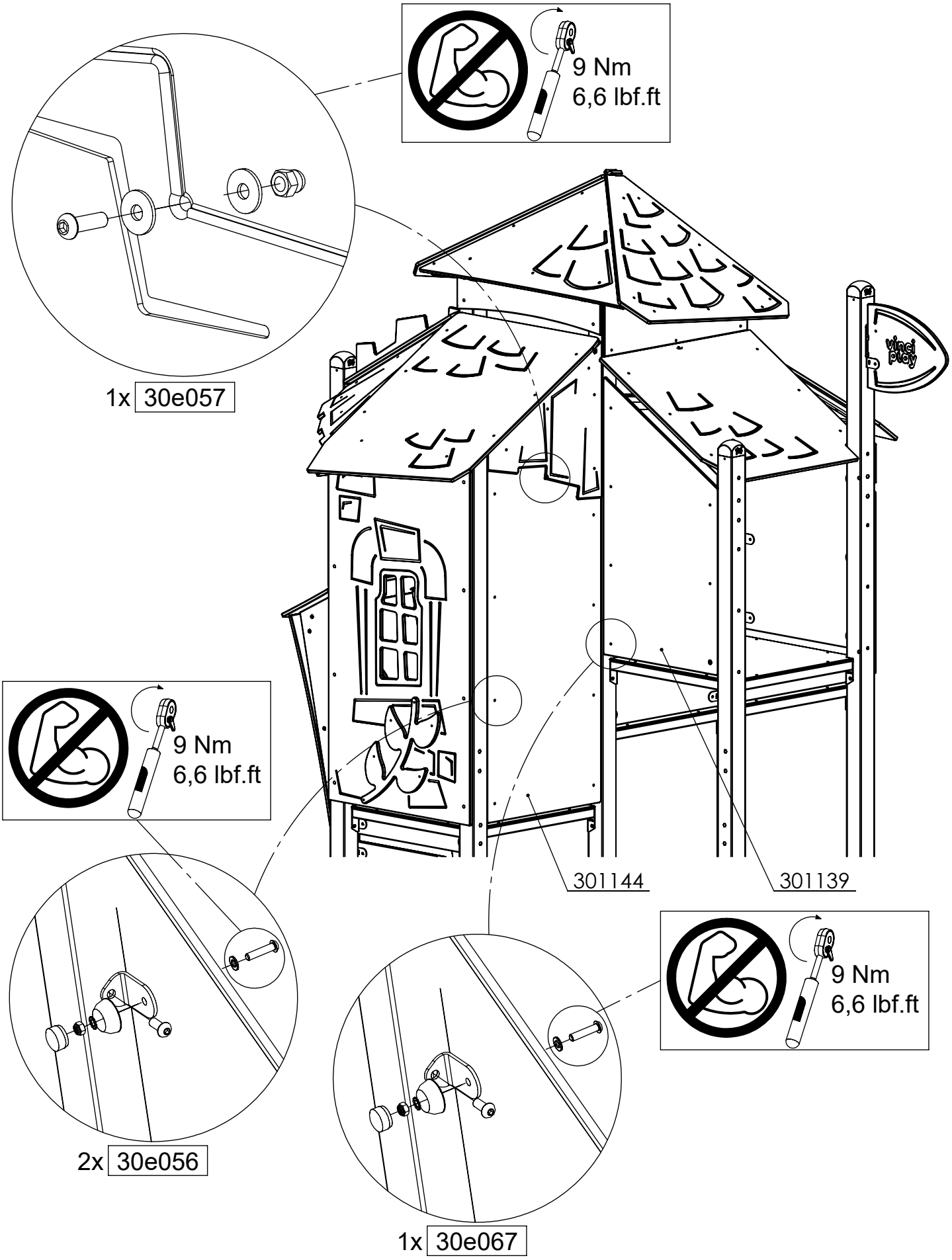
9 Nm
6,6 lbf.ft
1x 30e057
9 Nm
6,6 lbf.ft
301144
301139
9 Nm
6,6 lbf.ft
2x 30e056
1x 30e067
vinci play

[cm]

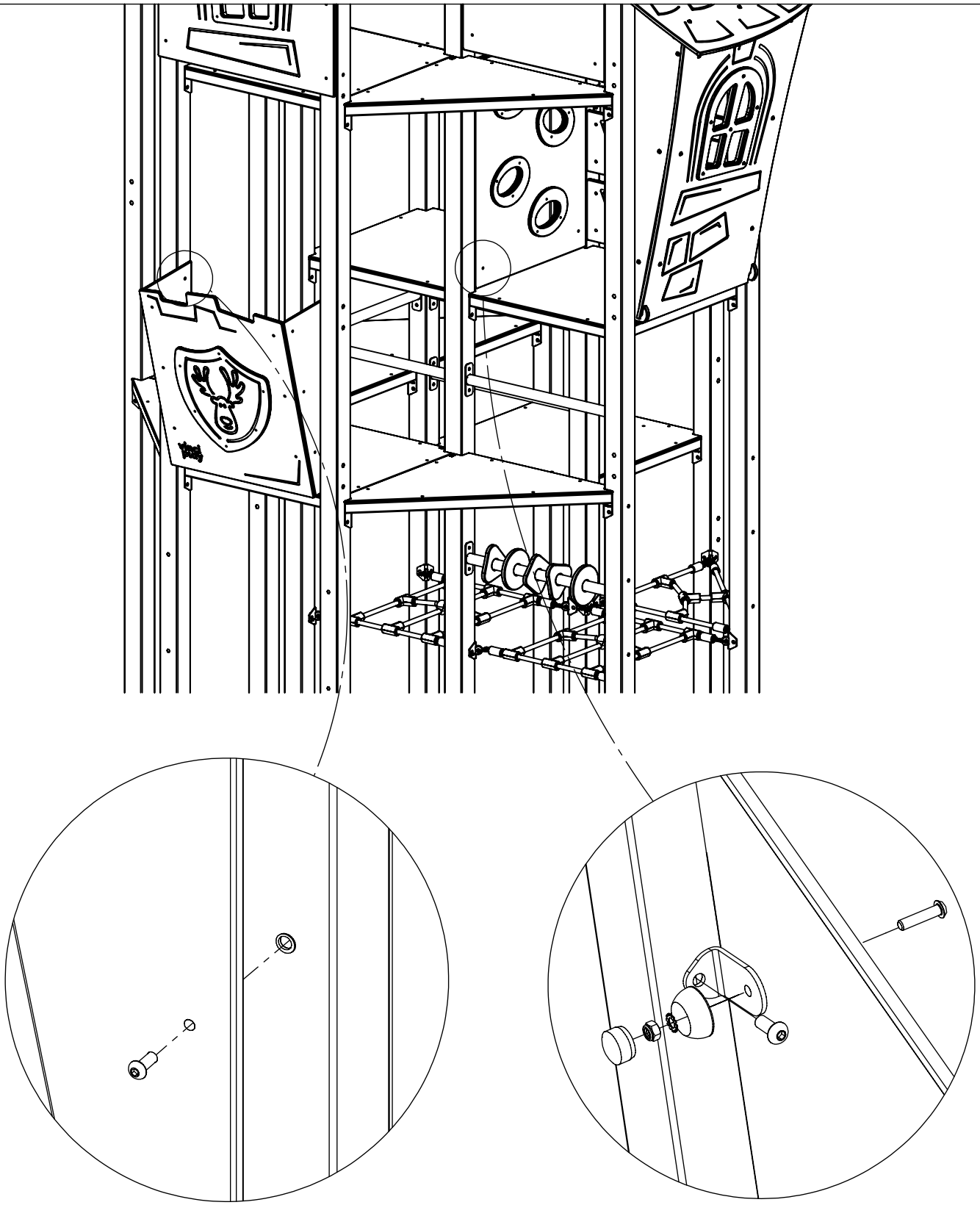

4x 10x25ikl

1x 30c002

[cm]

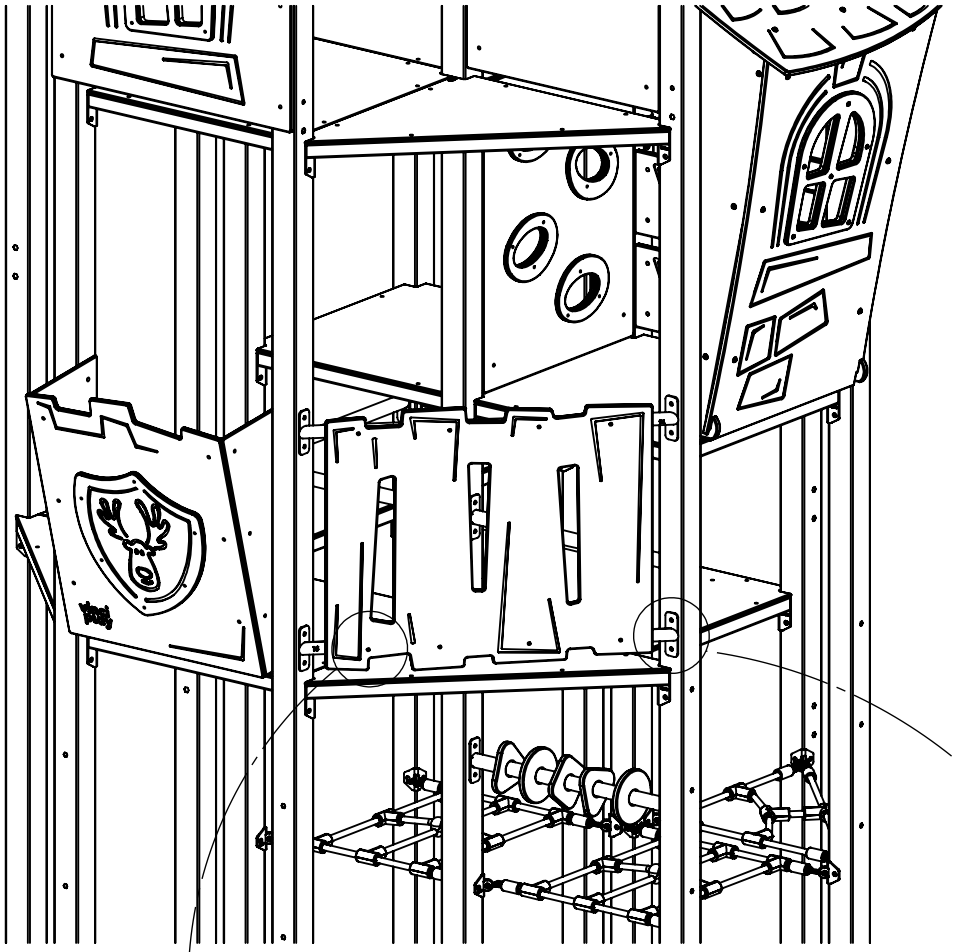

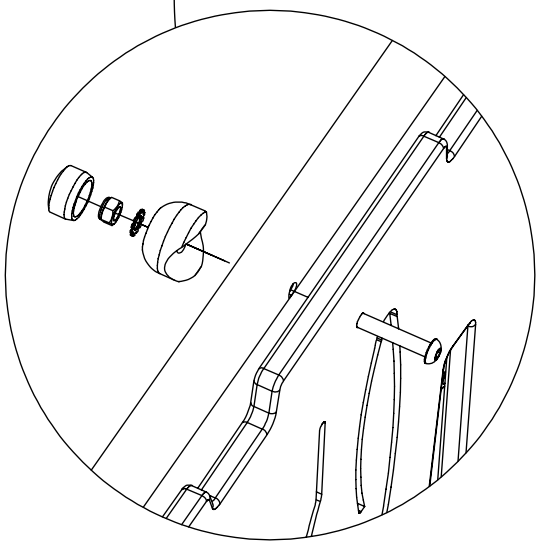

1x 30c006

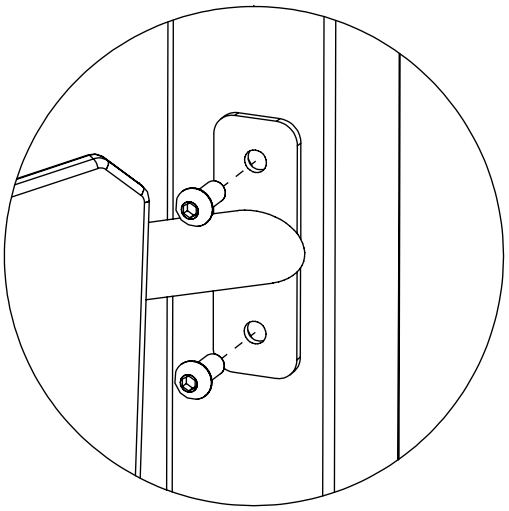

8x 10x25ikl

[cm]

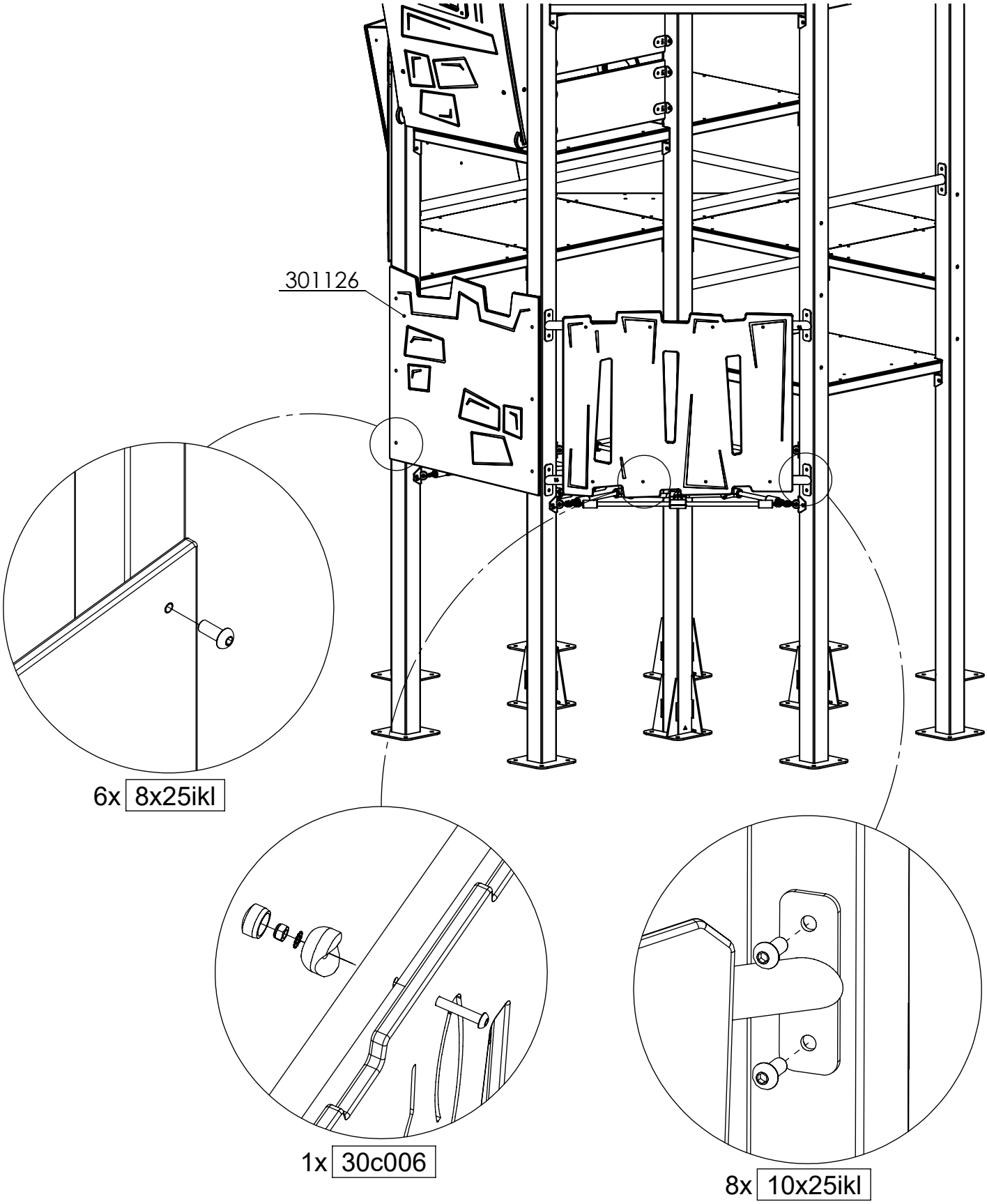

[cm]

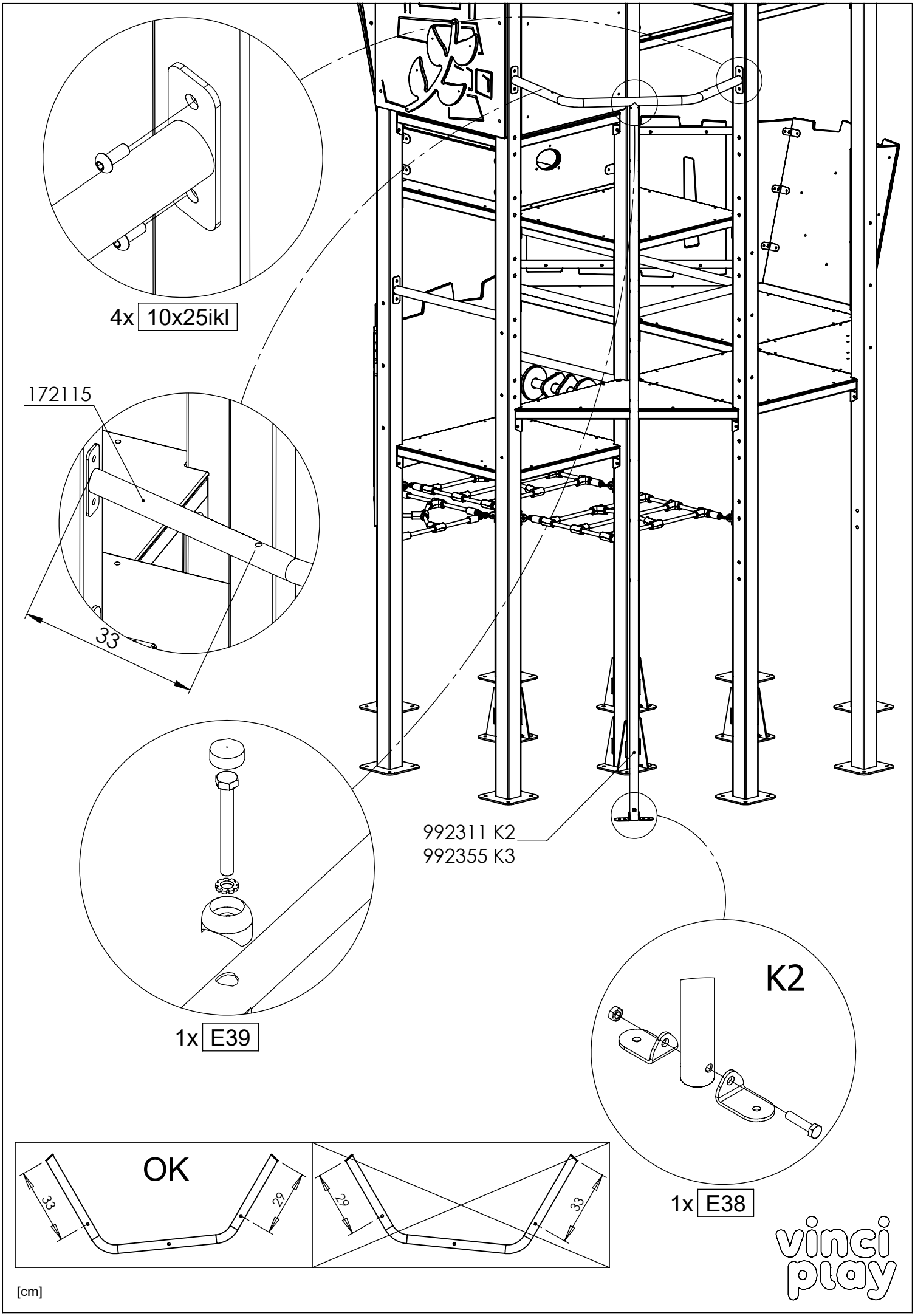
4x 10x25ikl
172115
33
992311 K2
992355 K3
1x E39
K2
1x E38
OK
33
29
29
33
[cm]
vinci play

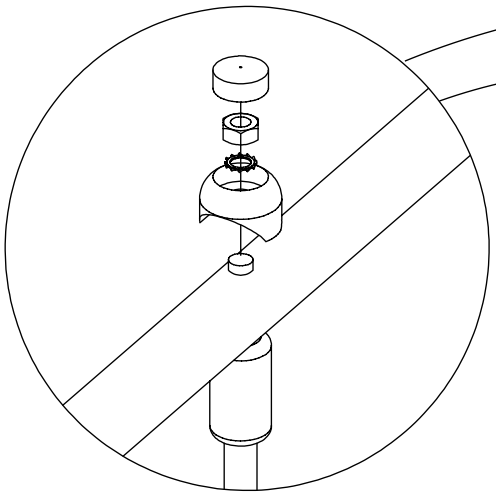

1x 30e016
1x 30e019

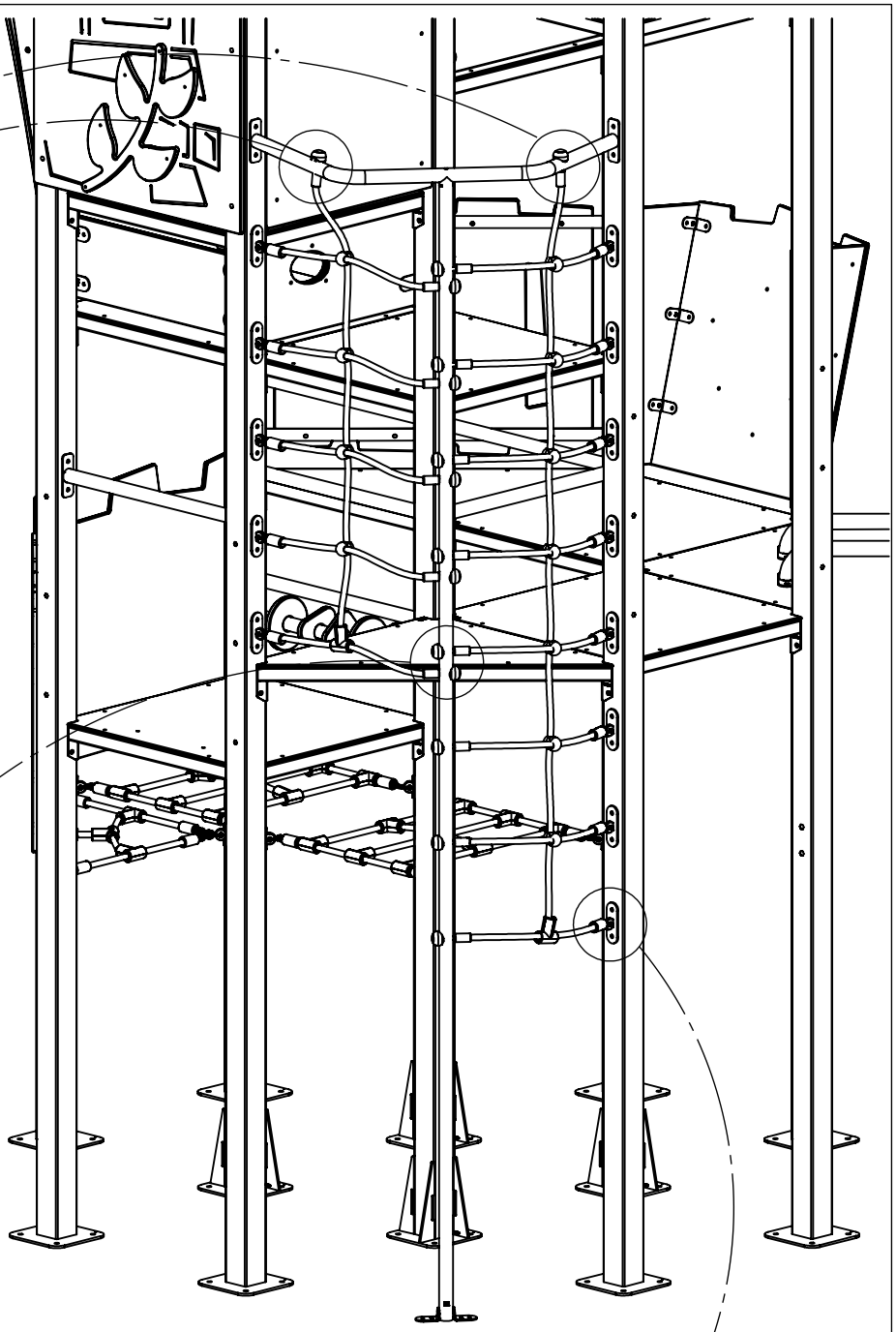

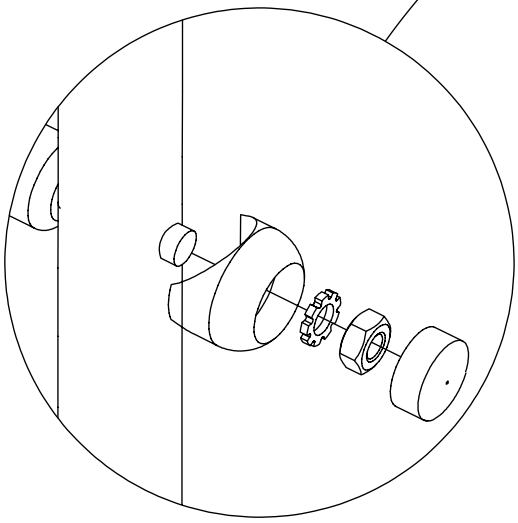

30e016
30e019

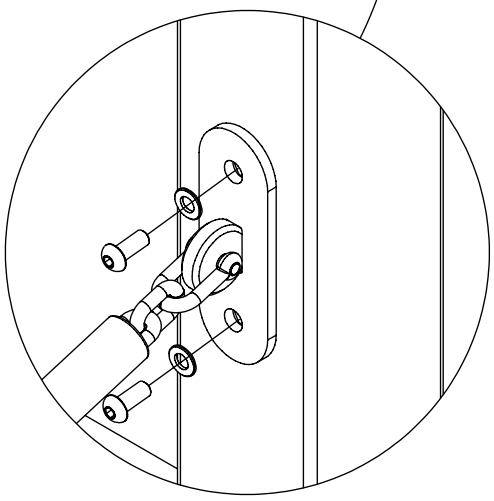

1x 30e075
26x 10x25ikl
26x 10pp

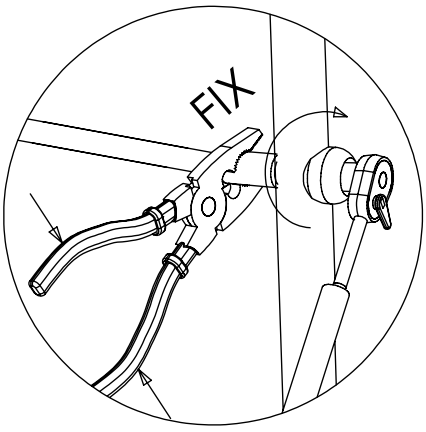

[cm]

vinci play

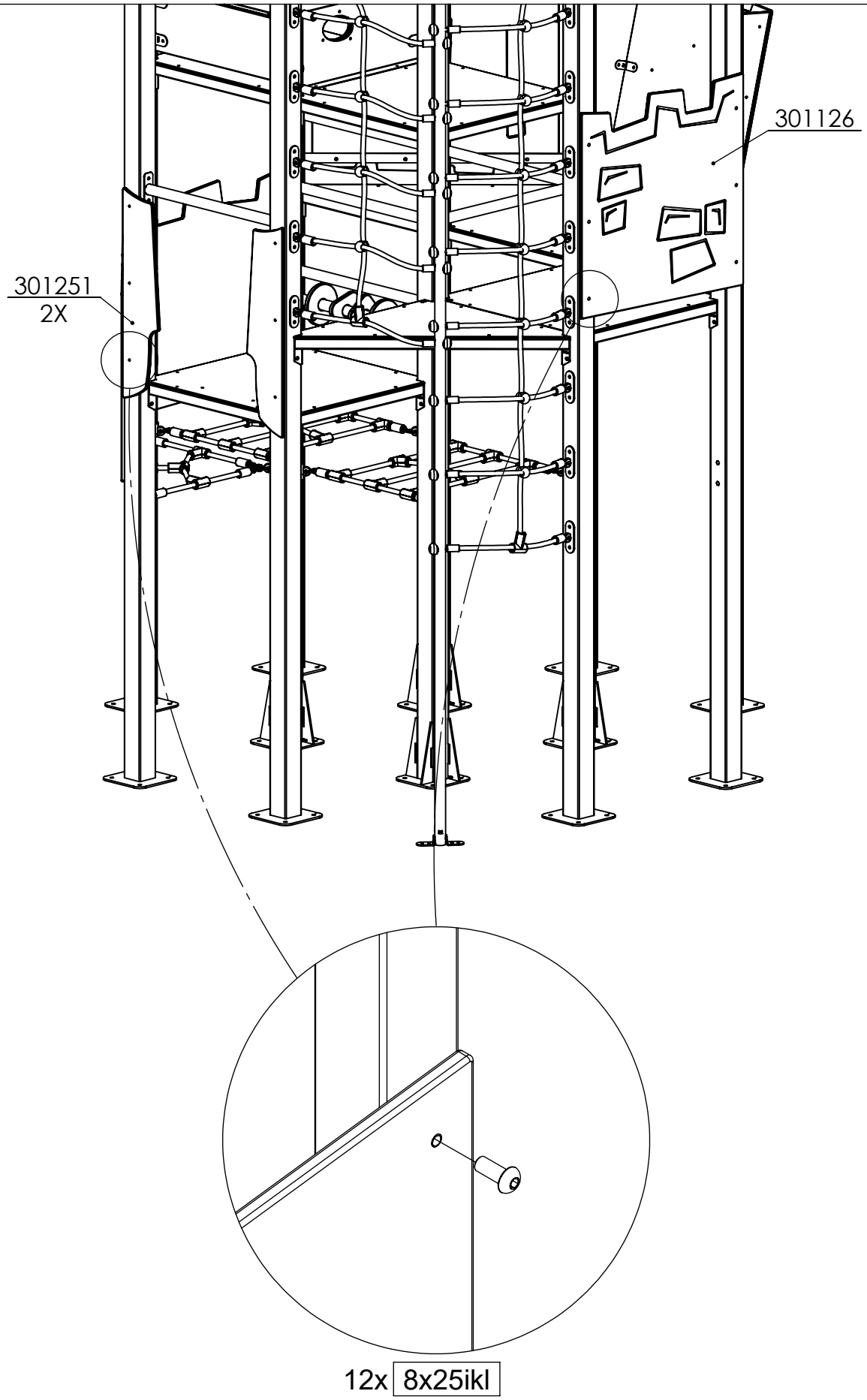

[cm]

vinci play

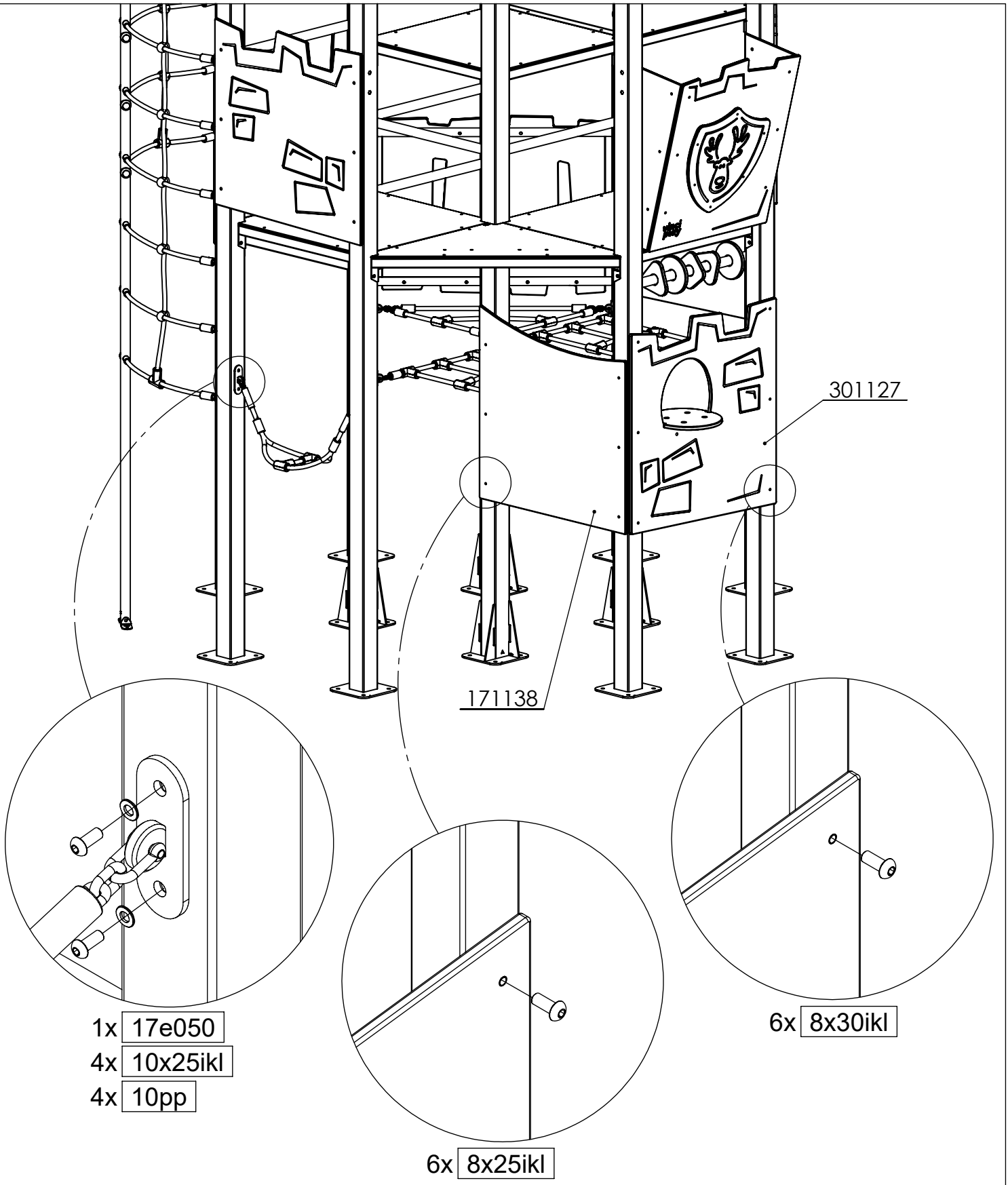

[cm]

vinci play

K2

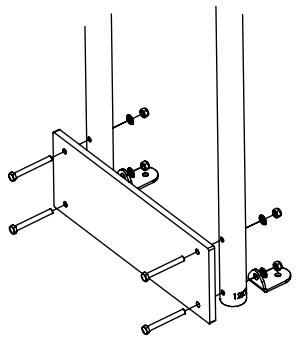

1x E80

K2

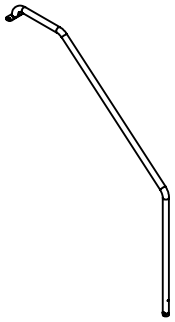

2x 992109

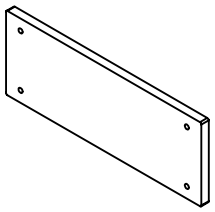

1x 991229

K3

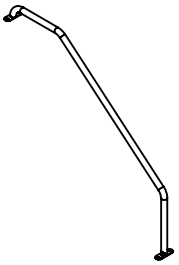

2x 992138

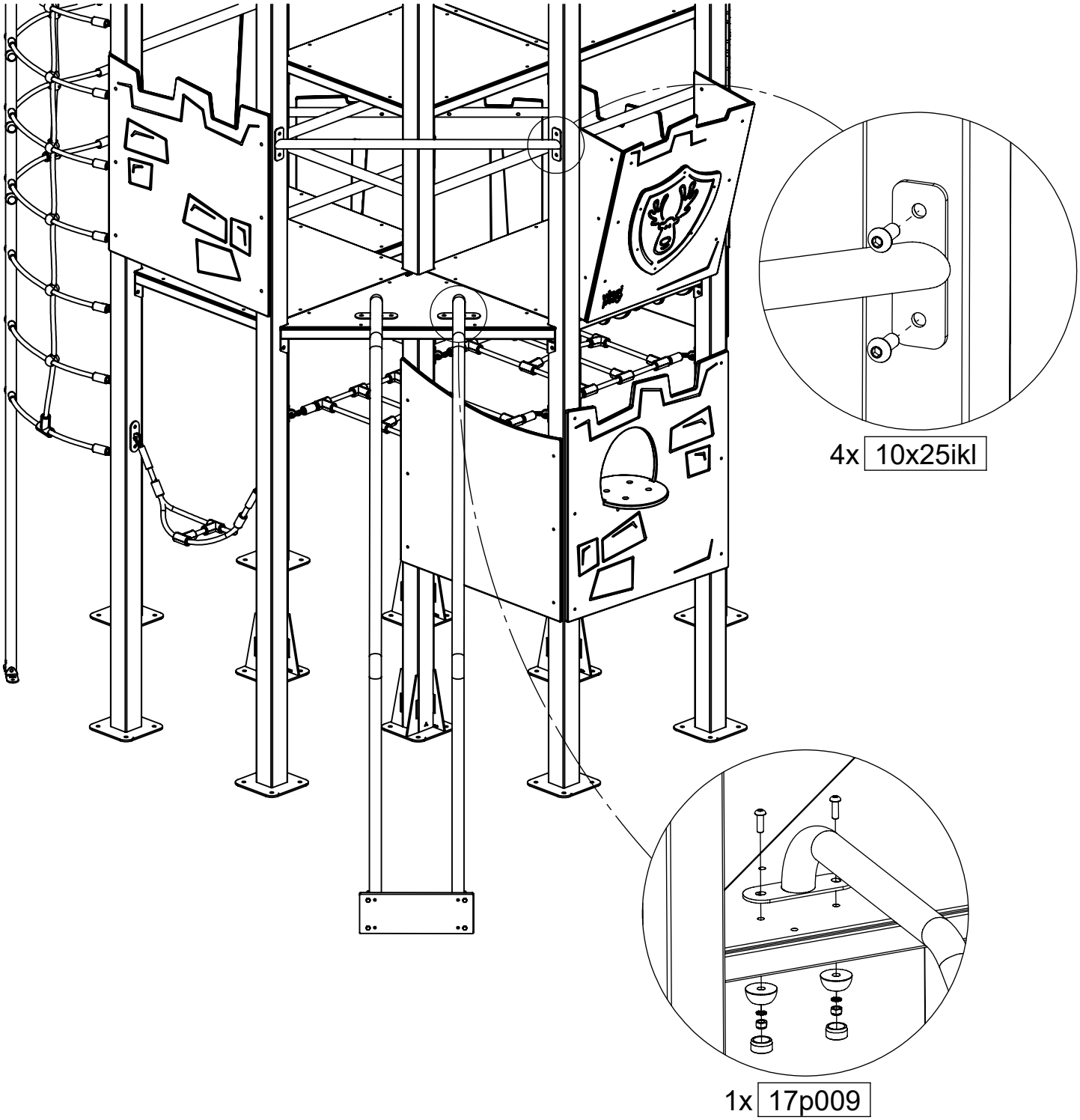

[cm]

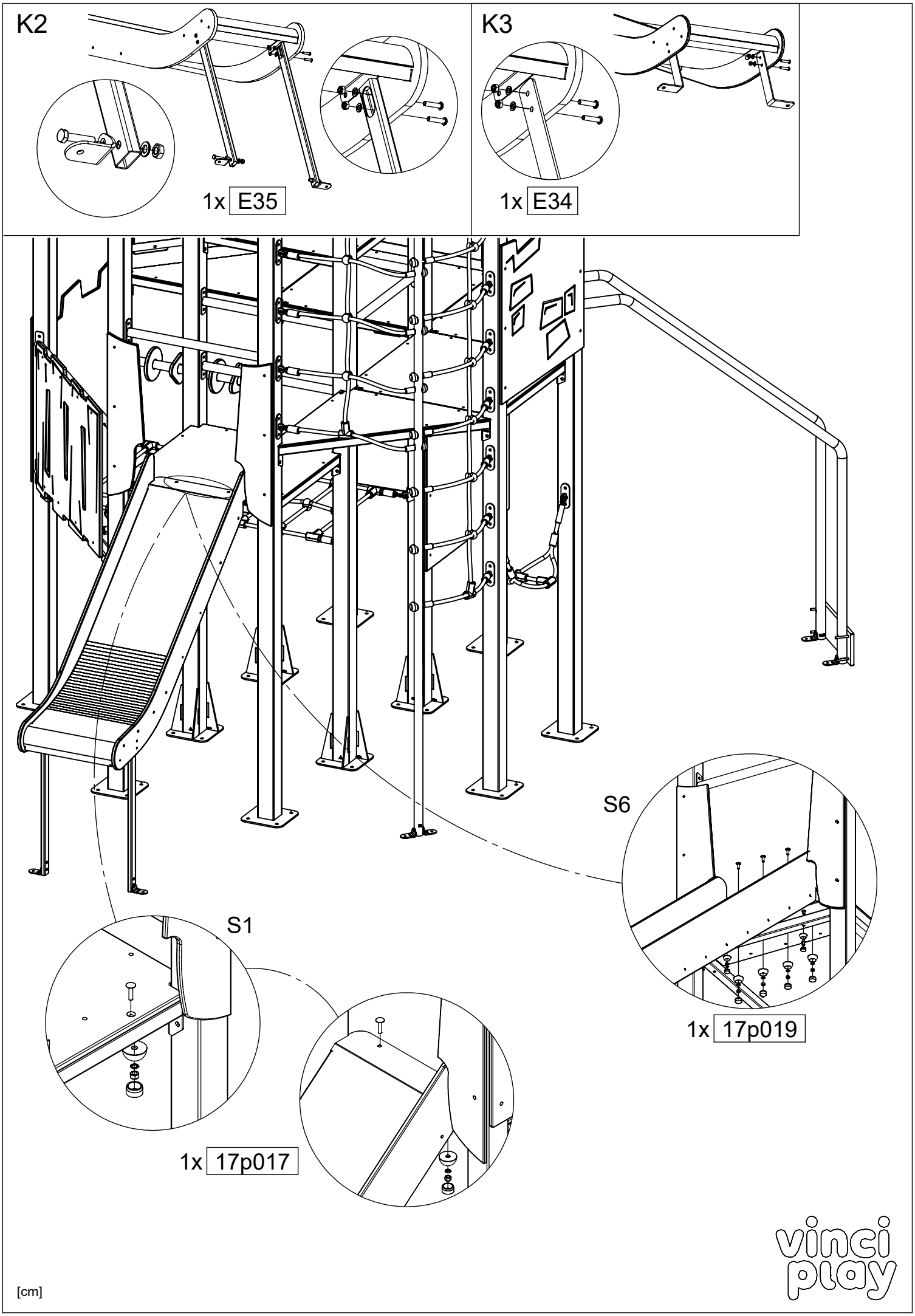
K2
1x E35
K3
1x E34
S6
1x 17p019
S1
1x 17p017
[cm]
vinci play

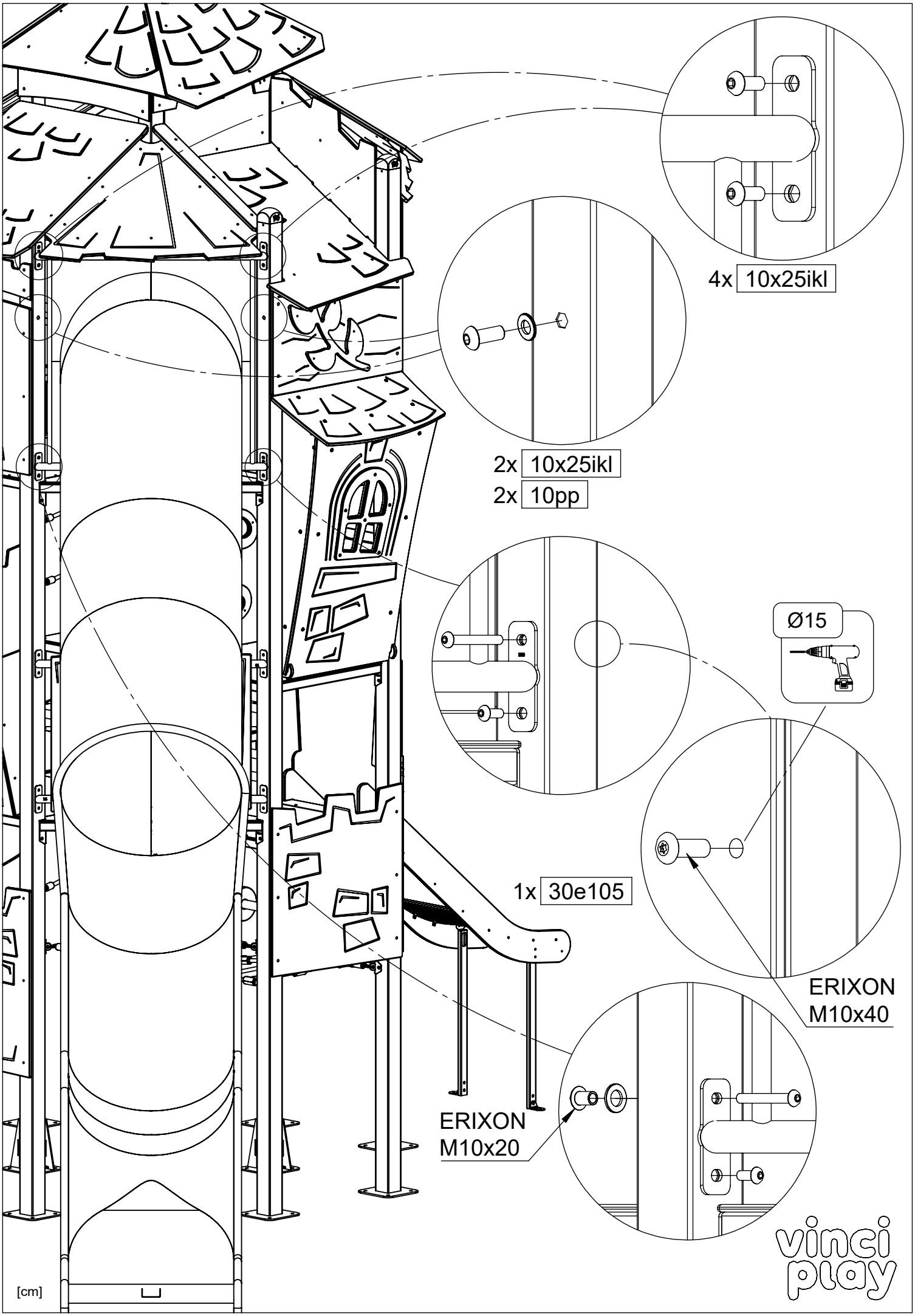
4x 10x25ikl
2x 10x25ikl
2x 10pp
Ø15
1x 30e105
ERIXON
M10x40
ERIXON
M10x20
[cm]
vinci play

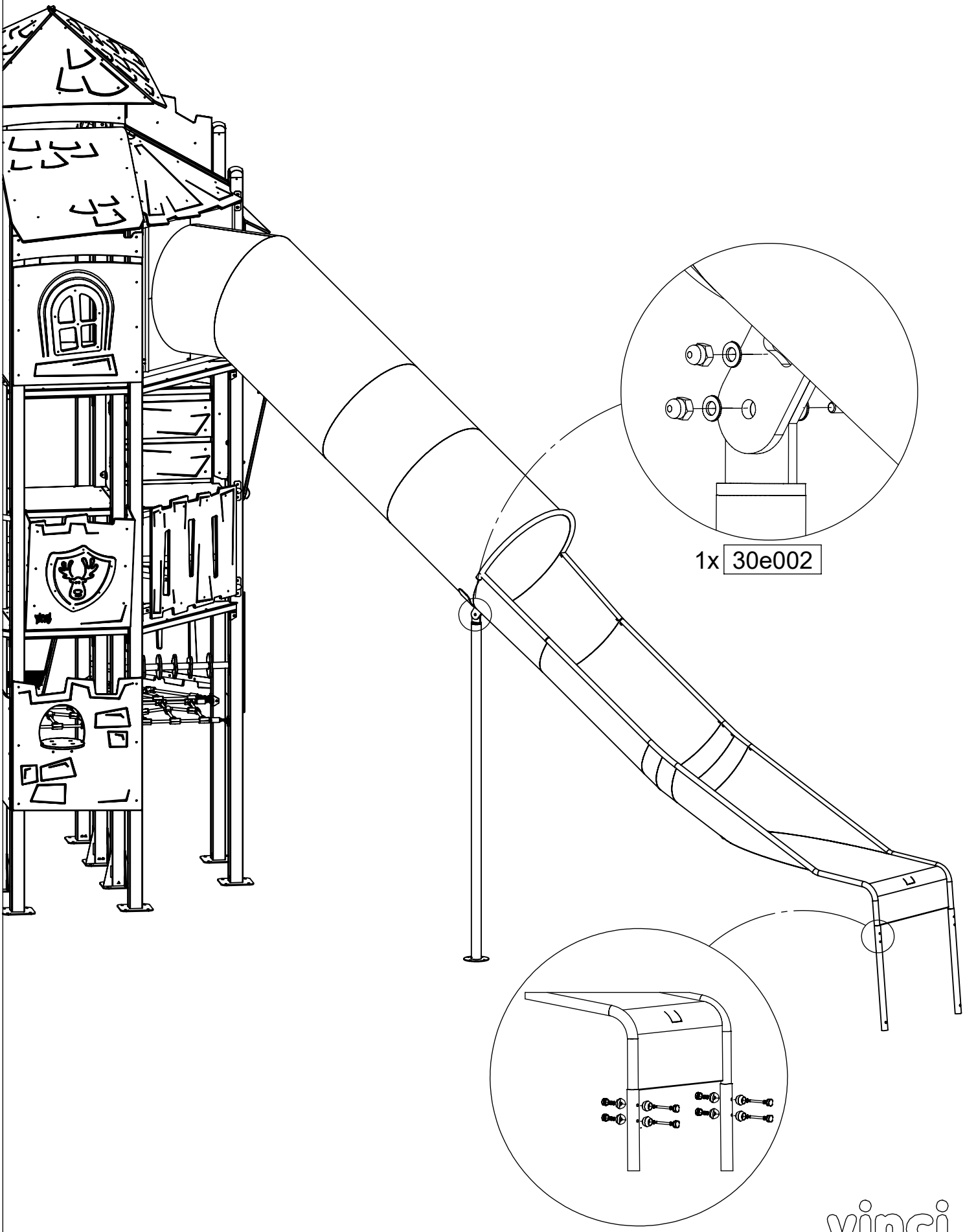
1x 30e002
1x 30e010
[cm]

3060-1.06S2

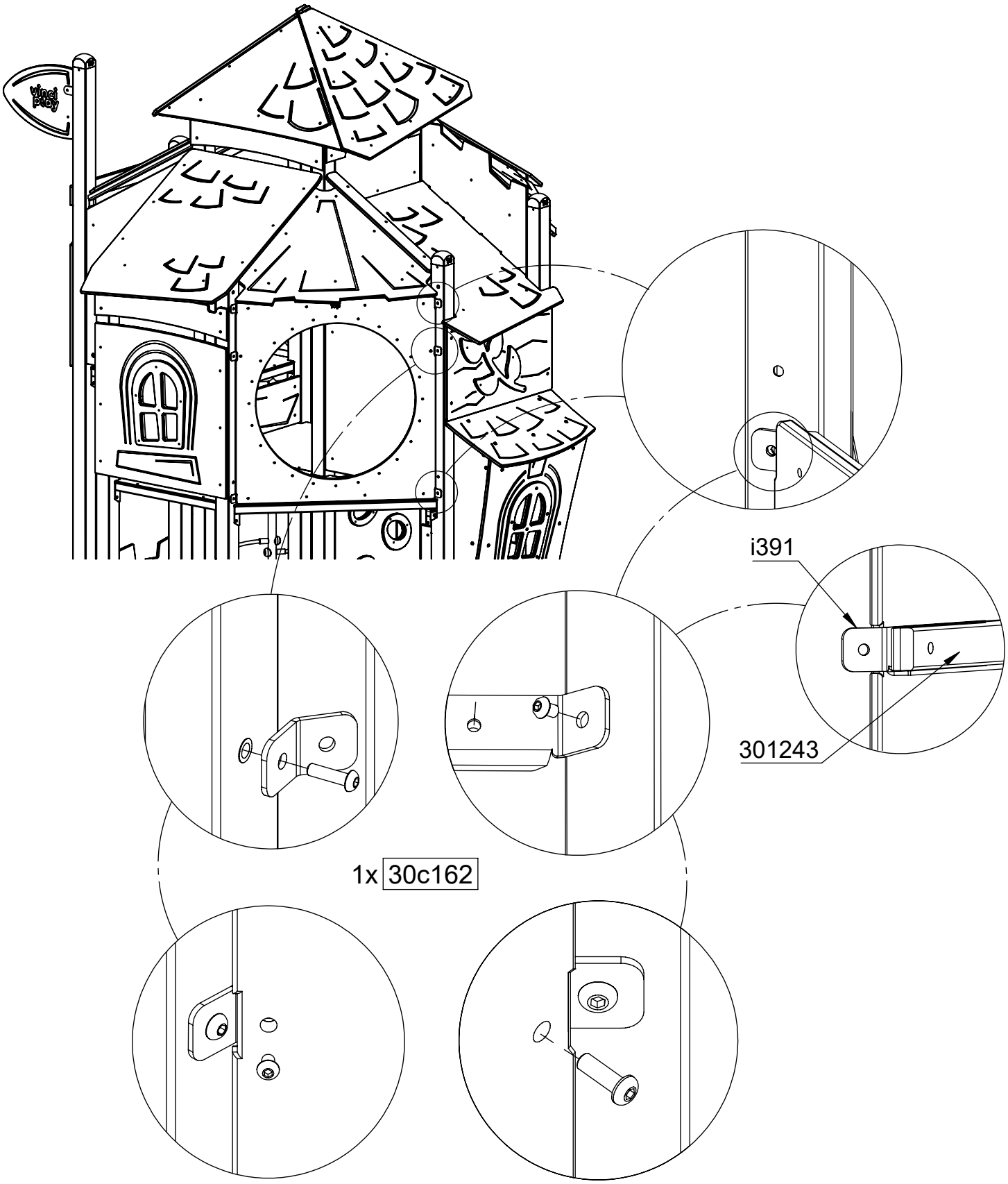

[cm]

3060-1.06S2

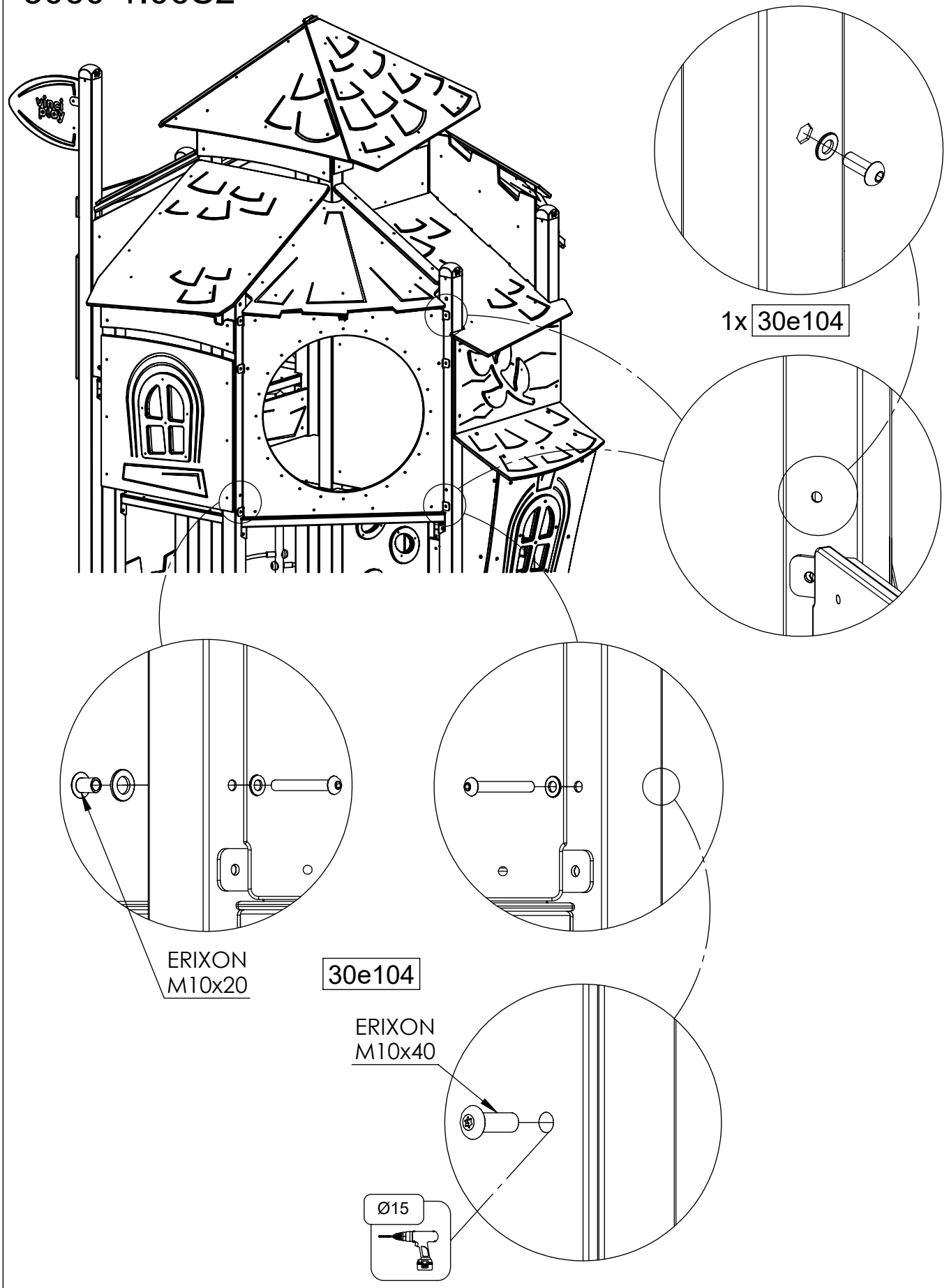

[cm]

3060-1.06S2

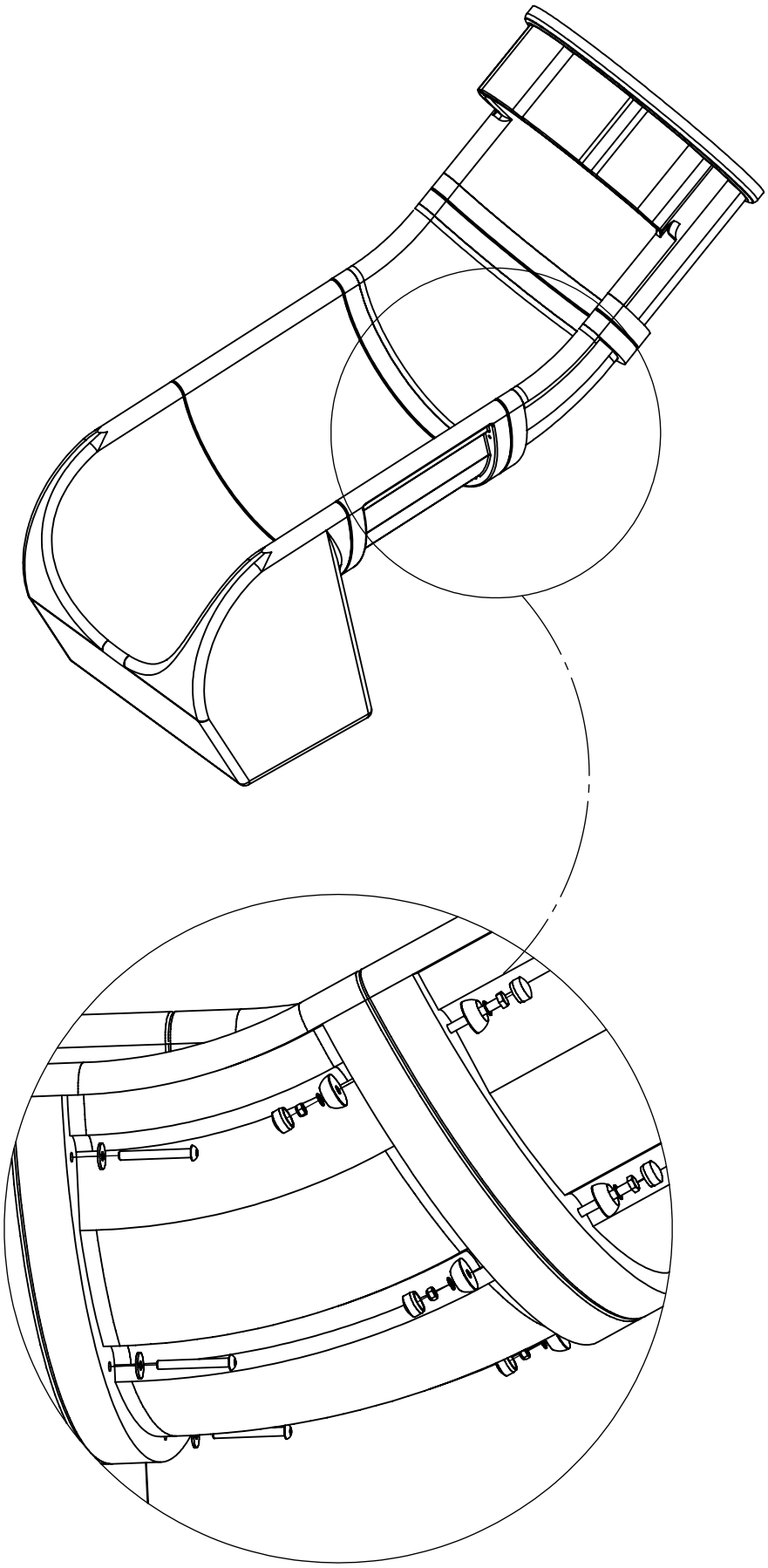

1x 30e102

[cm]

3060-1.06S2

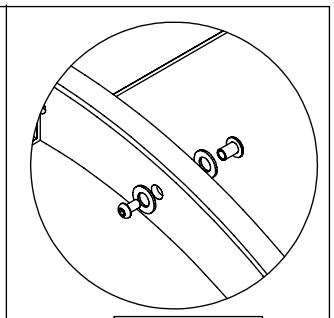

6x 30e090

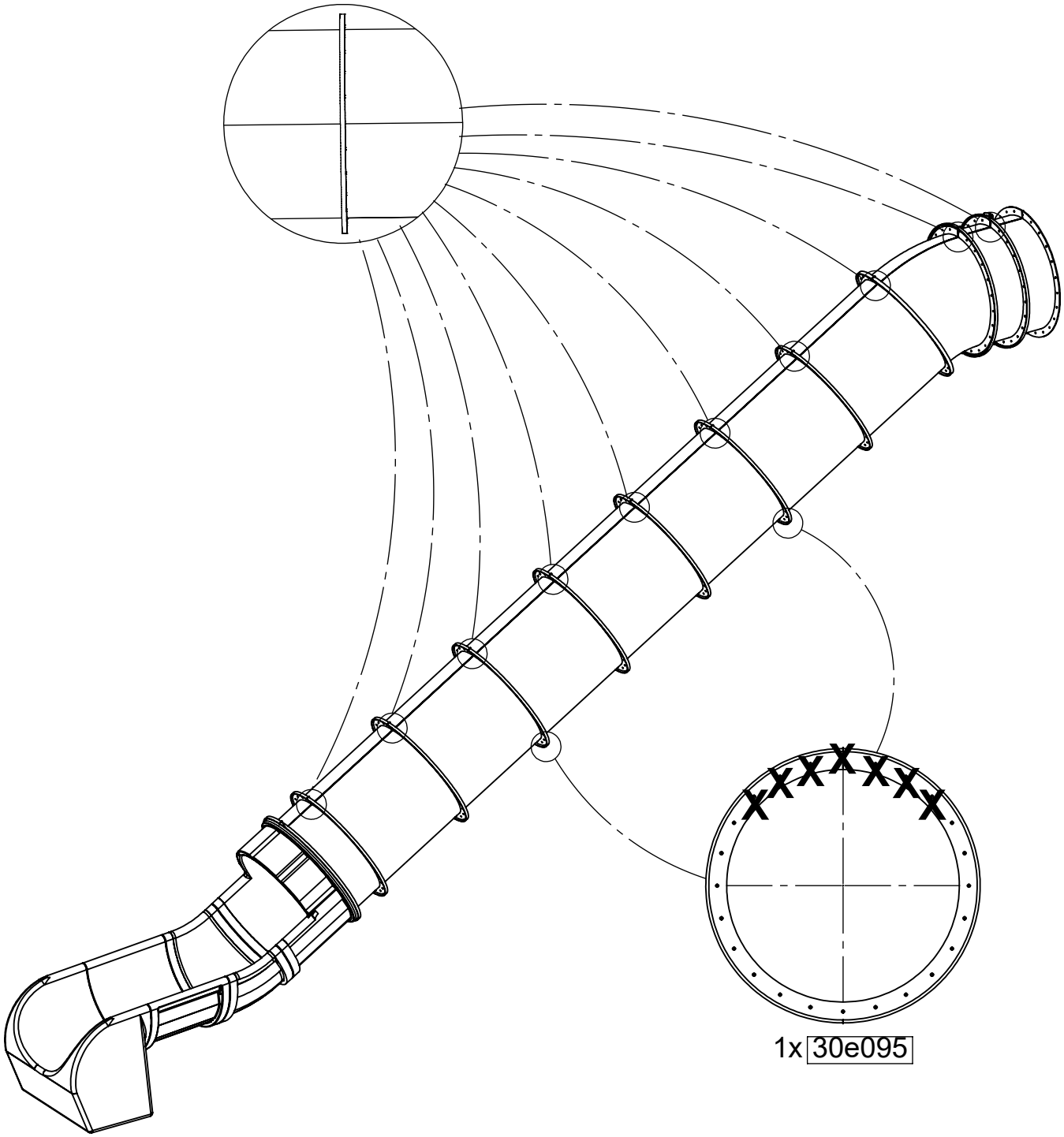

1x 30e095

[cm]

3060-1.06S2

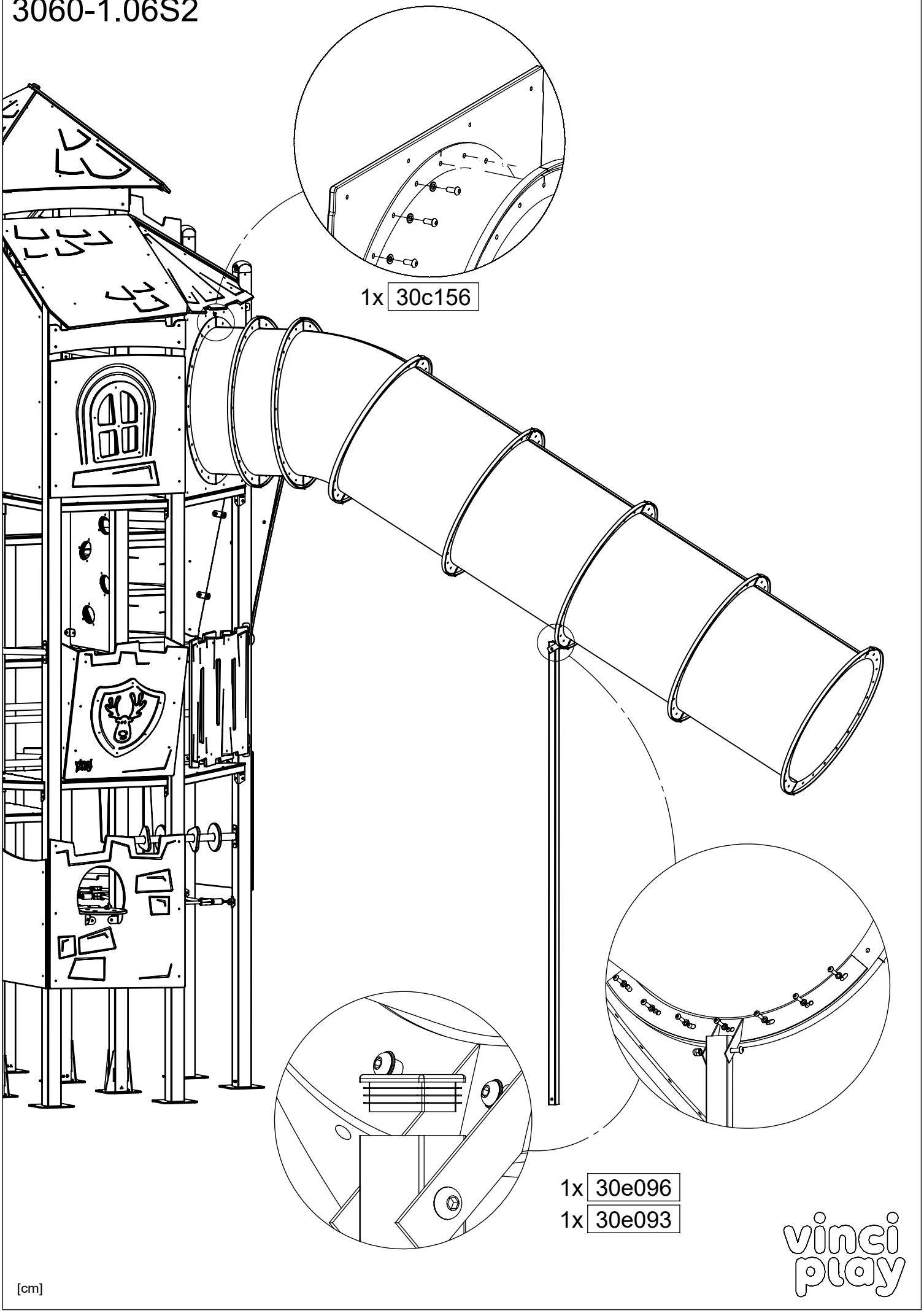

3060-1.06S2

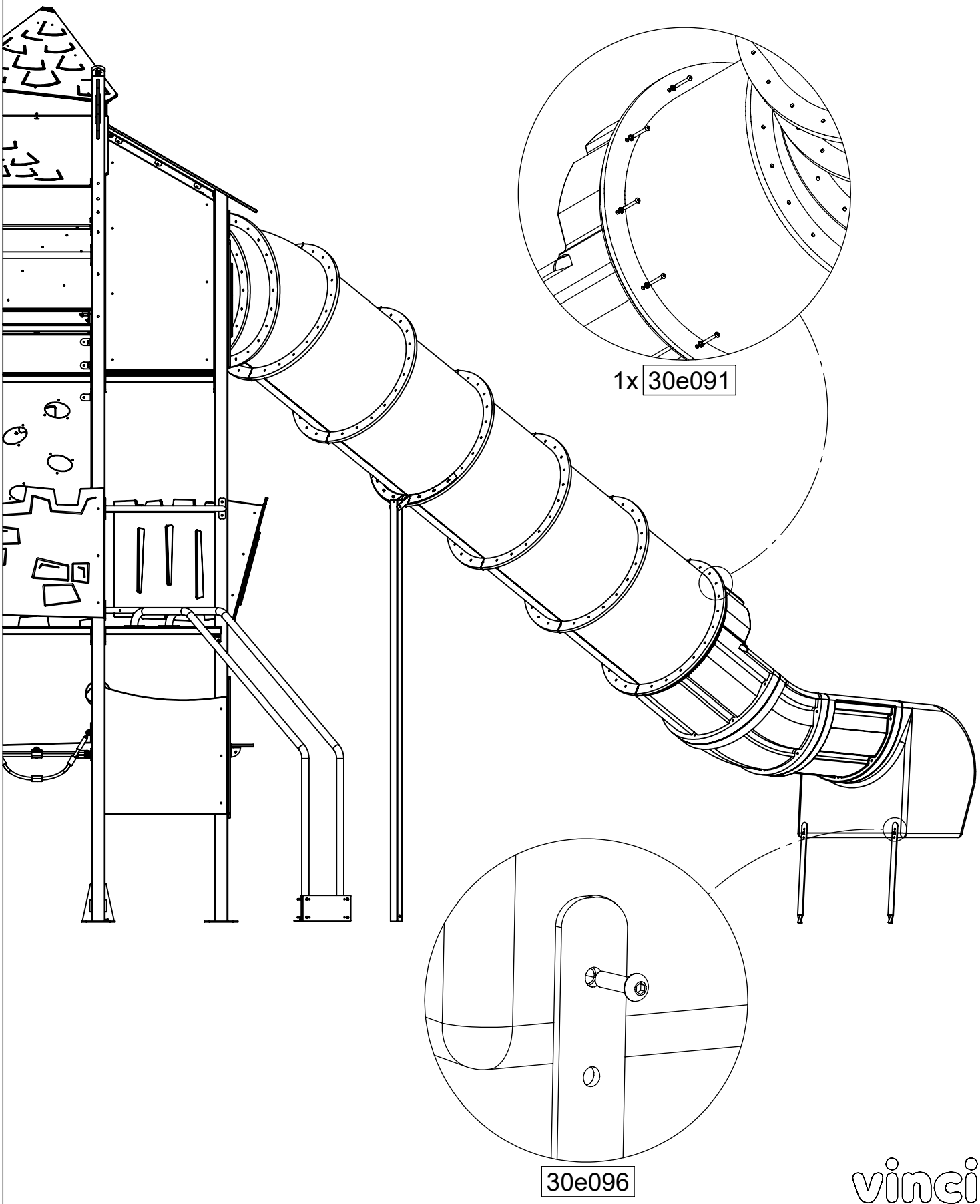

[cm]

3060-1.07

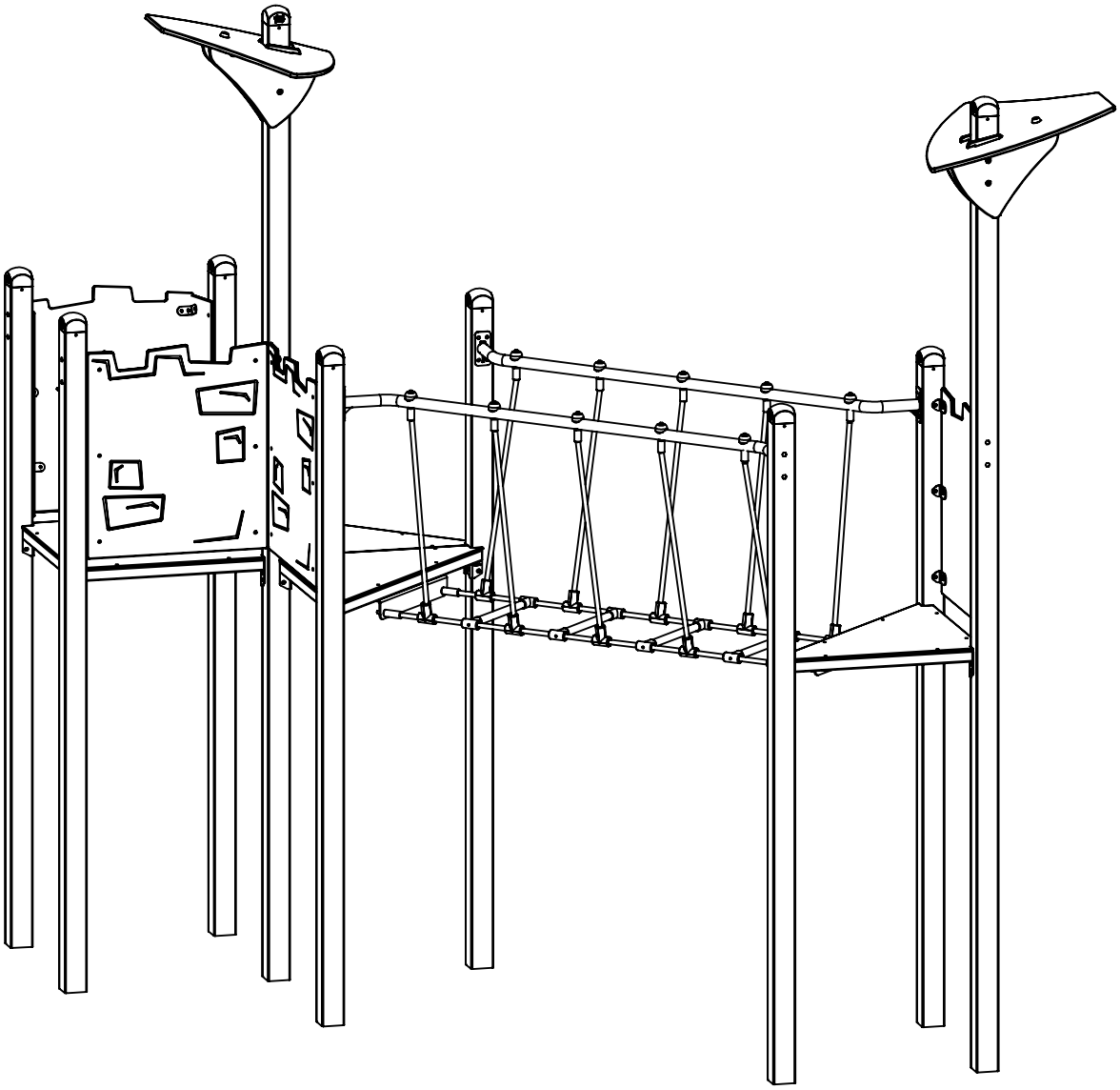

[cm]

vinci play

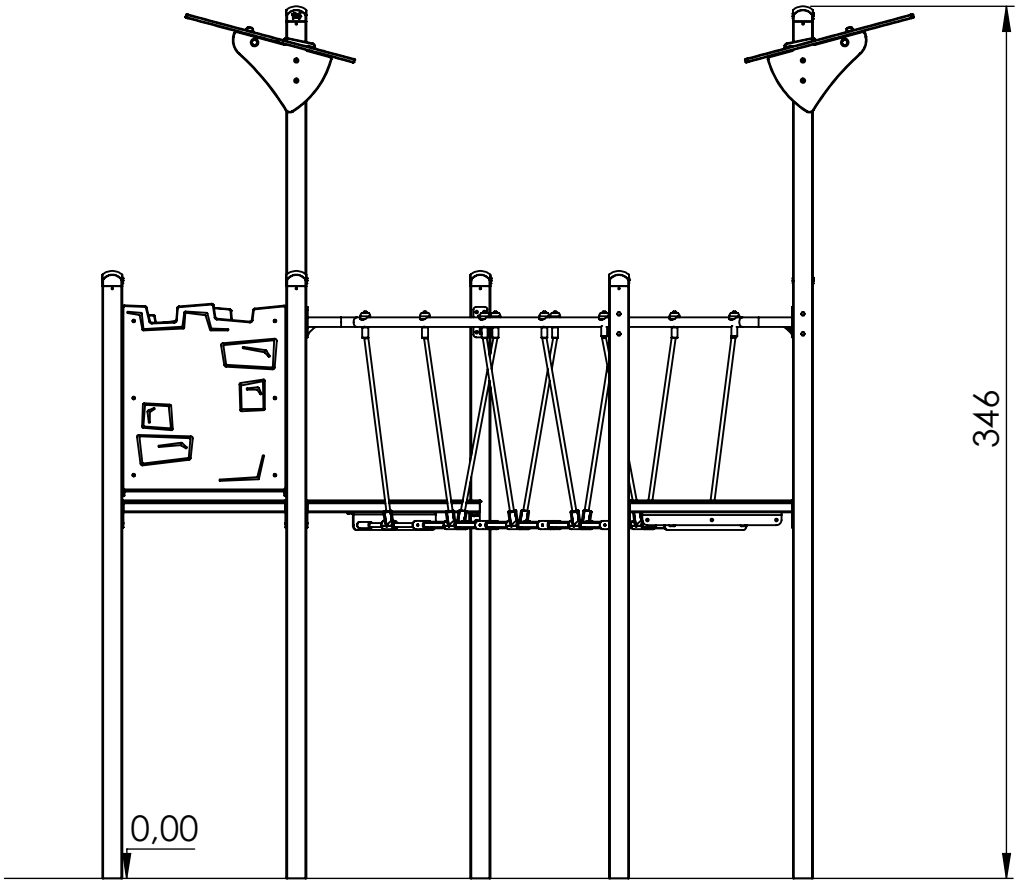

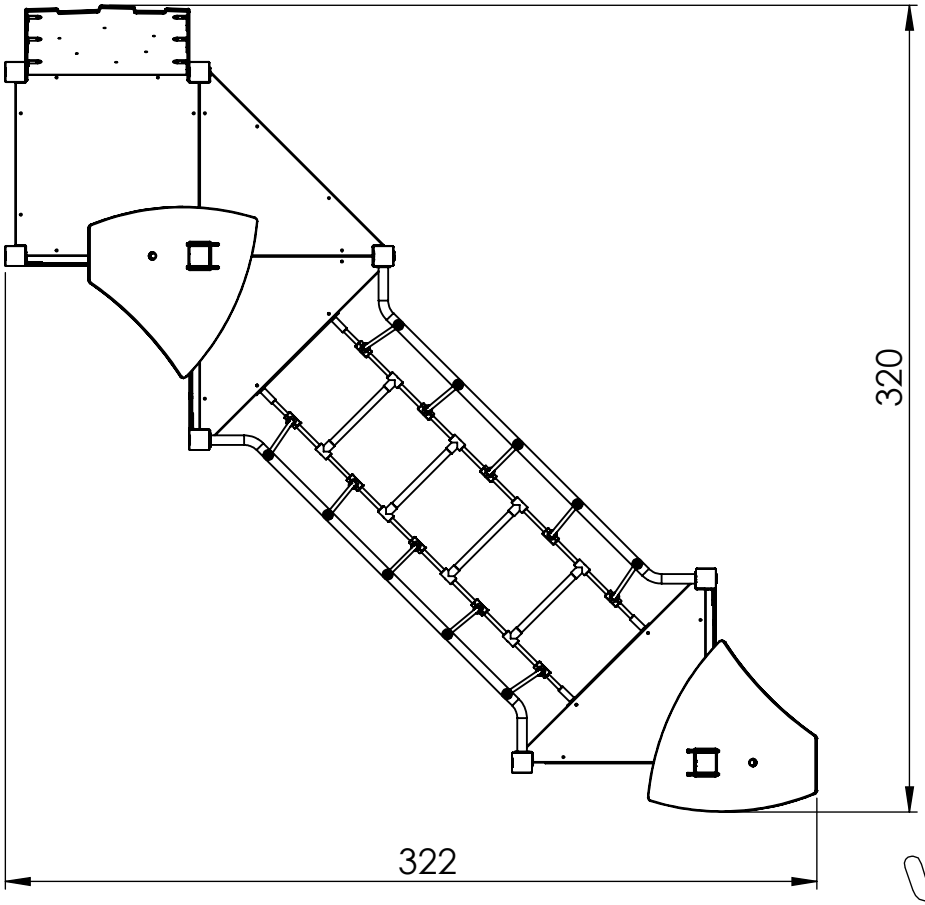

[cm]

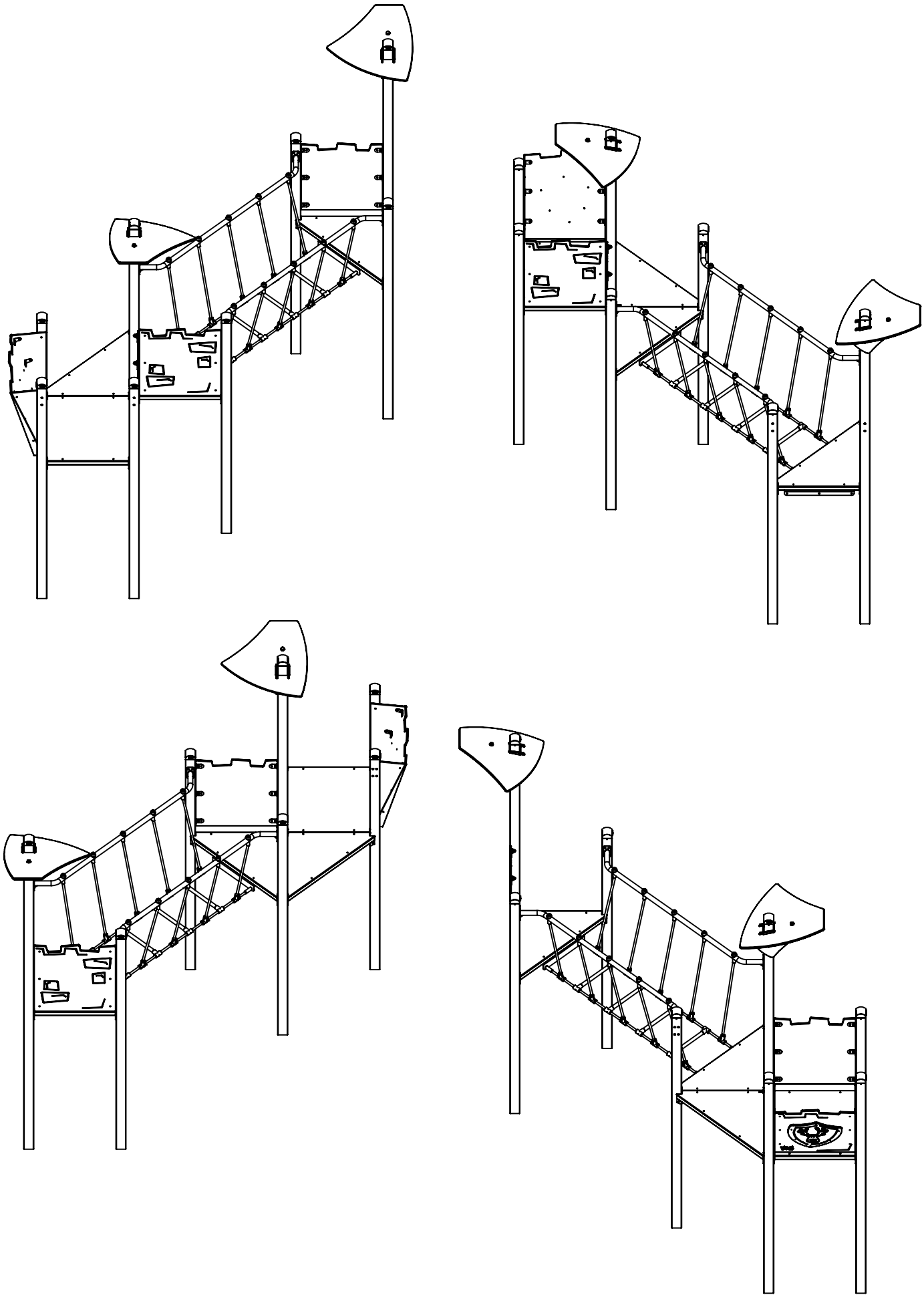

[cm]

vinci play

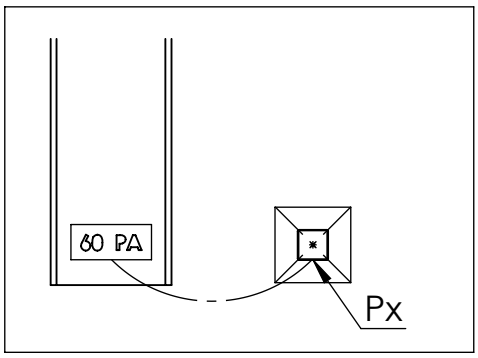

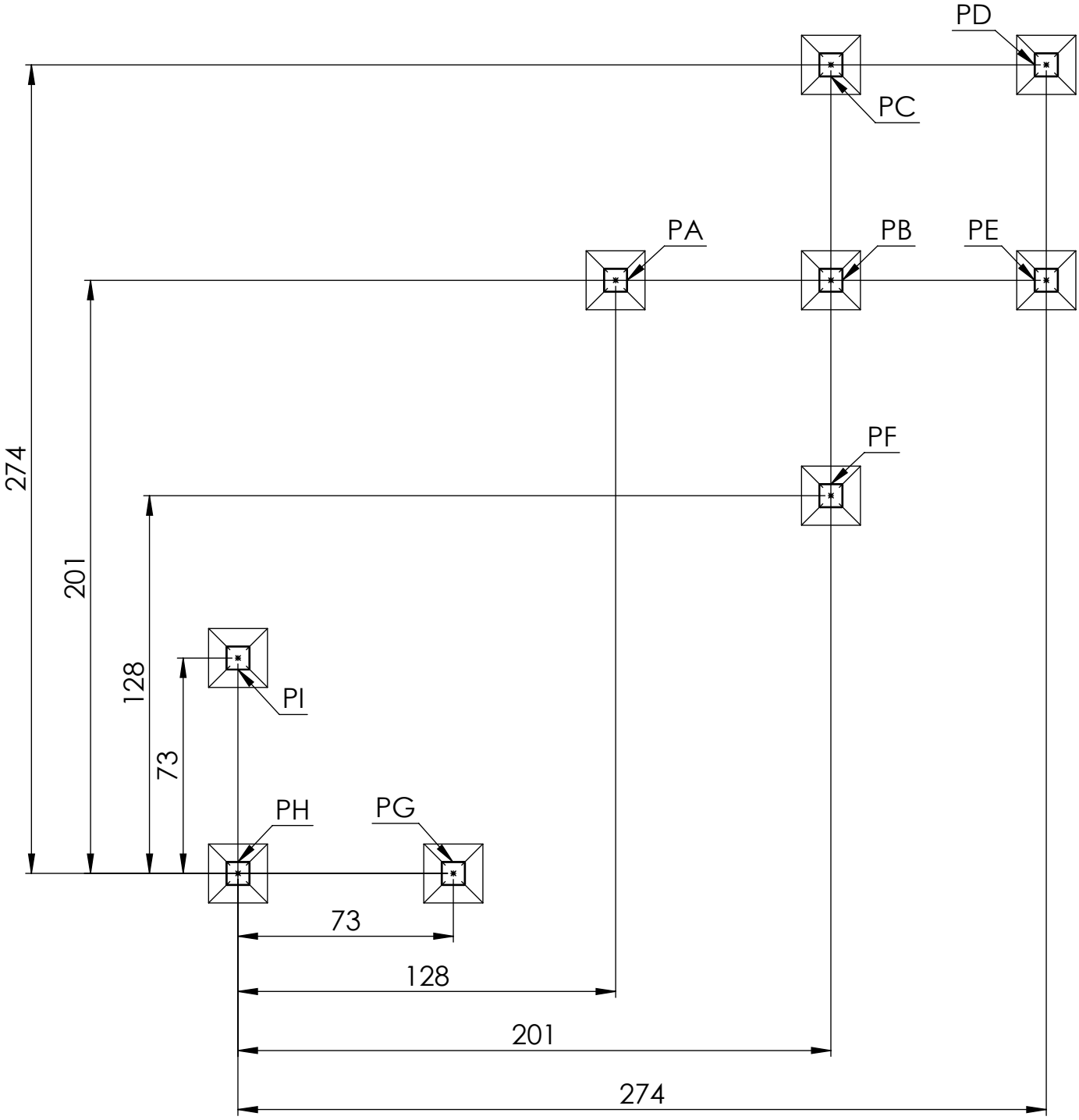

[cm]

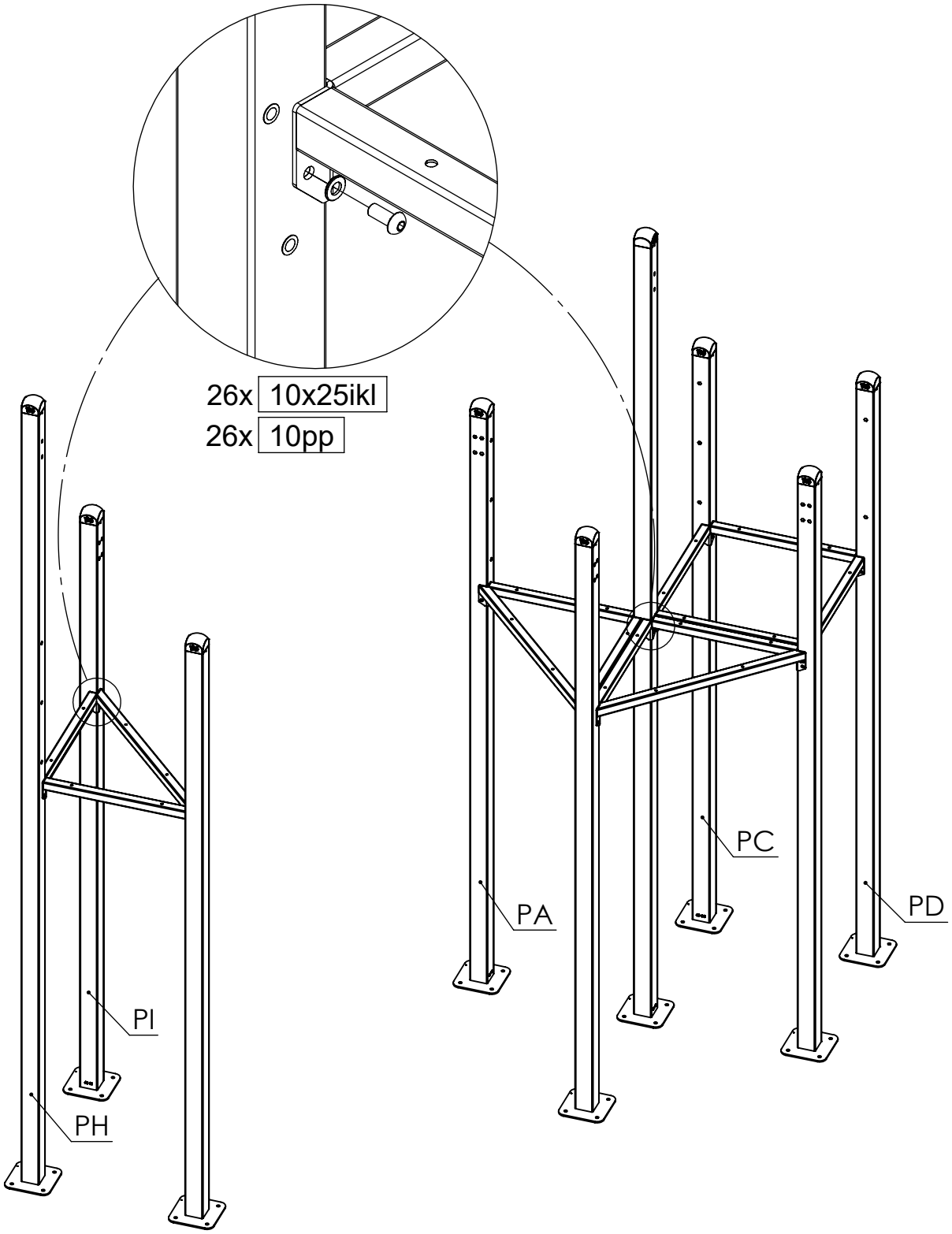

[cm]

vinci play

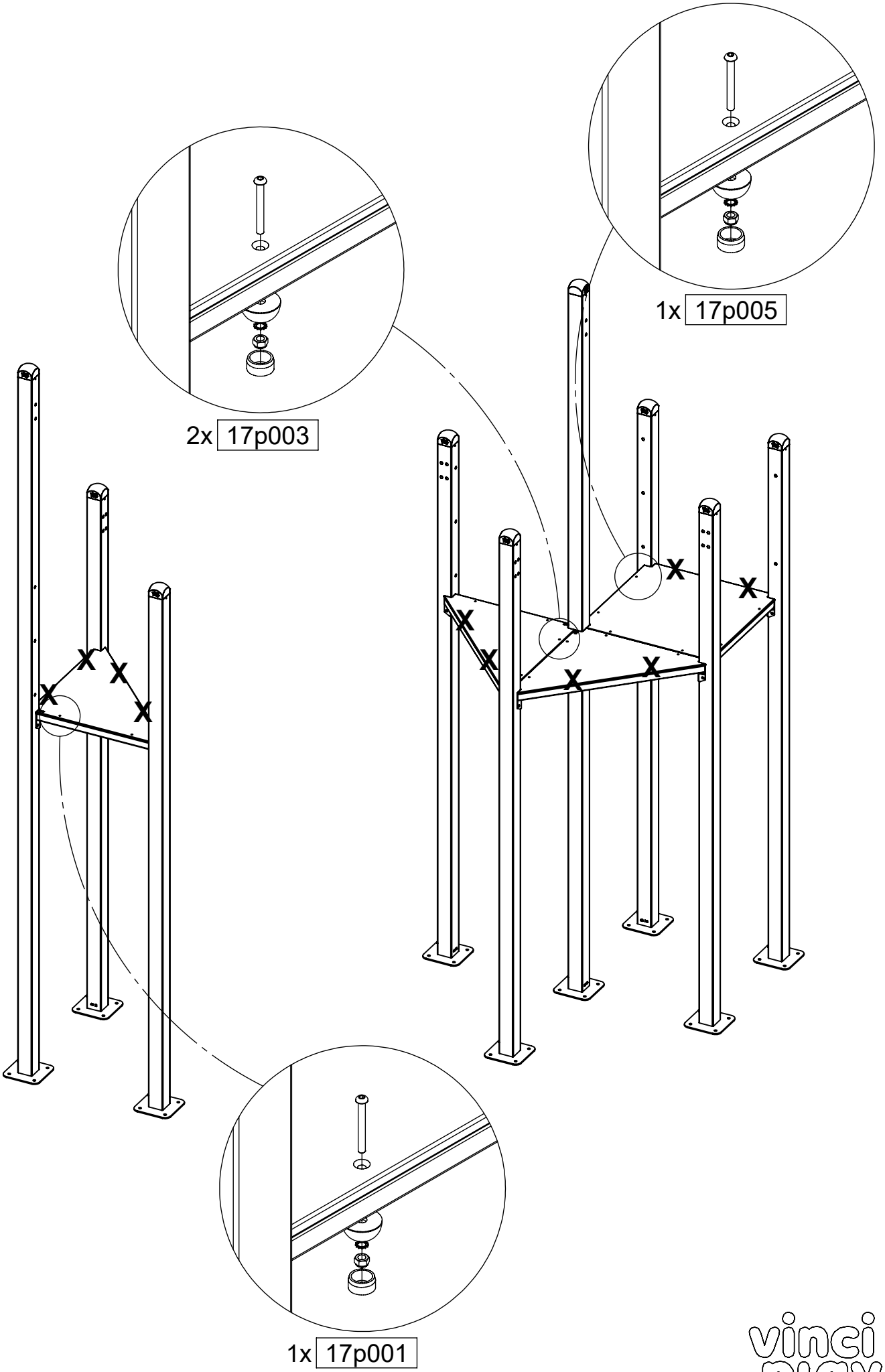
2x 17p003
1x 17p005
1x 17p001
[cm]

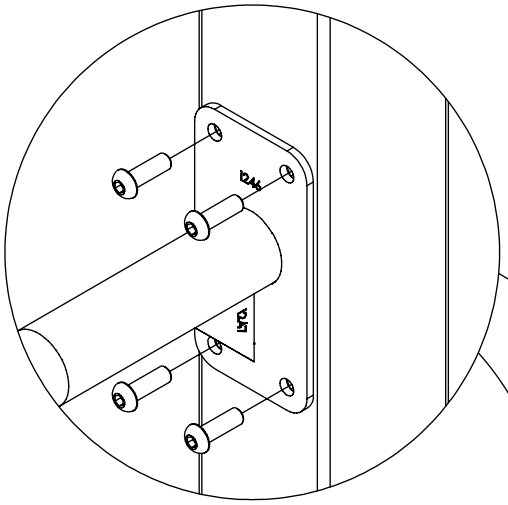

16x 10x25ikl

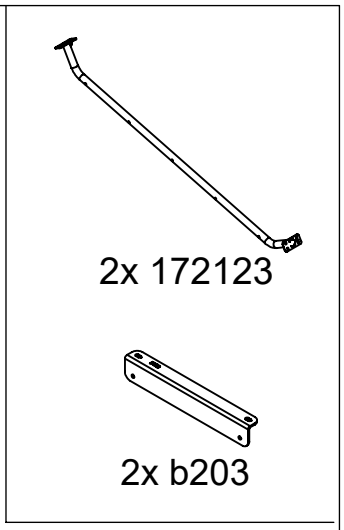

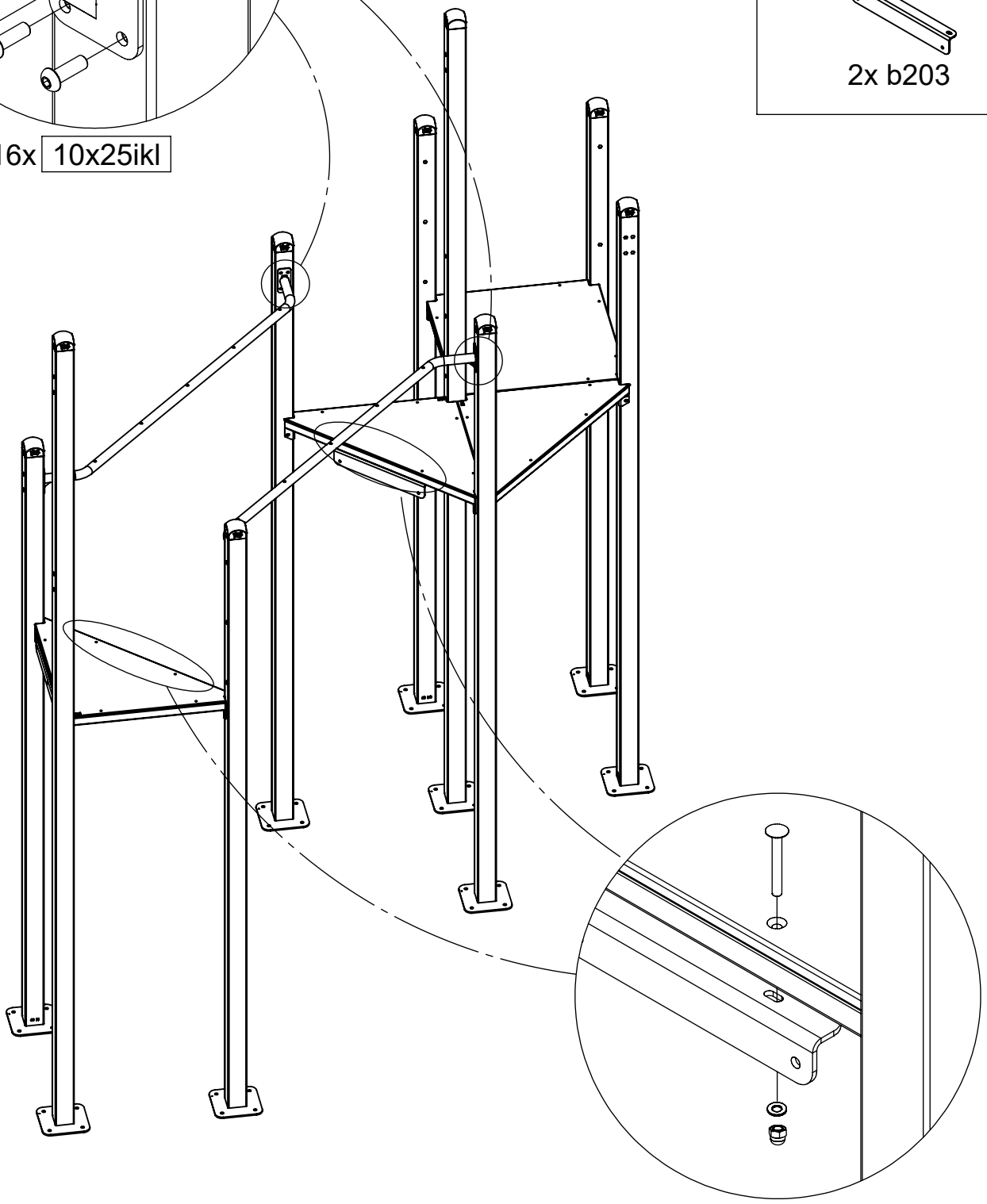

1x 17p023

[cm]

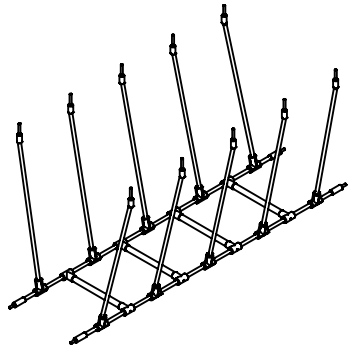

1x 175101

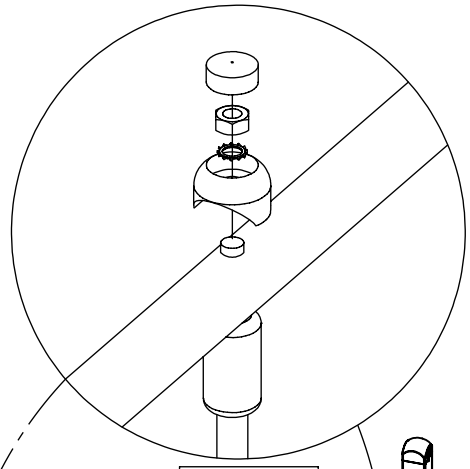

2x 12e035

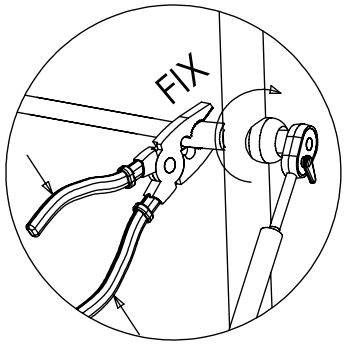

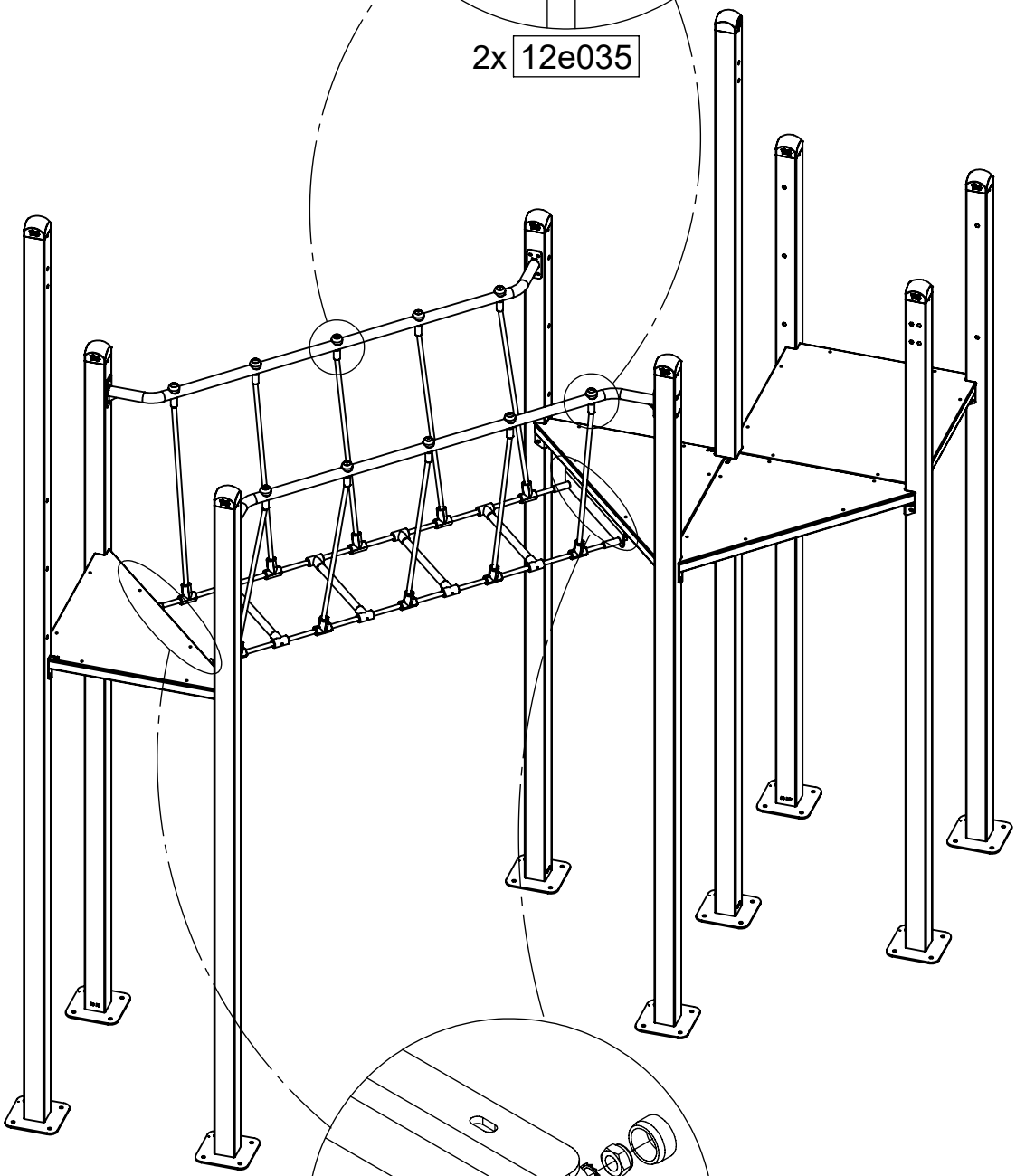

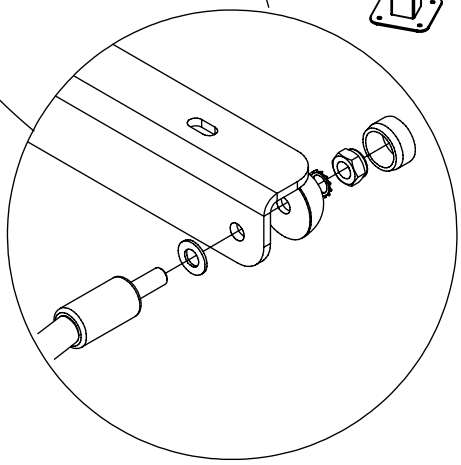

1x 17e024

[cm]

vinci play

x2

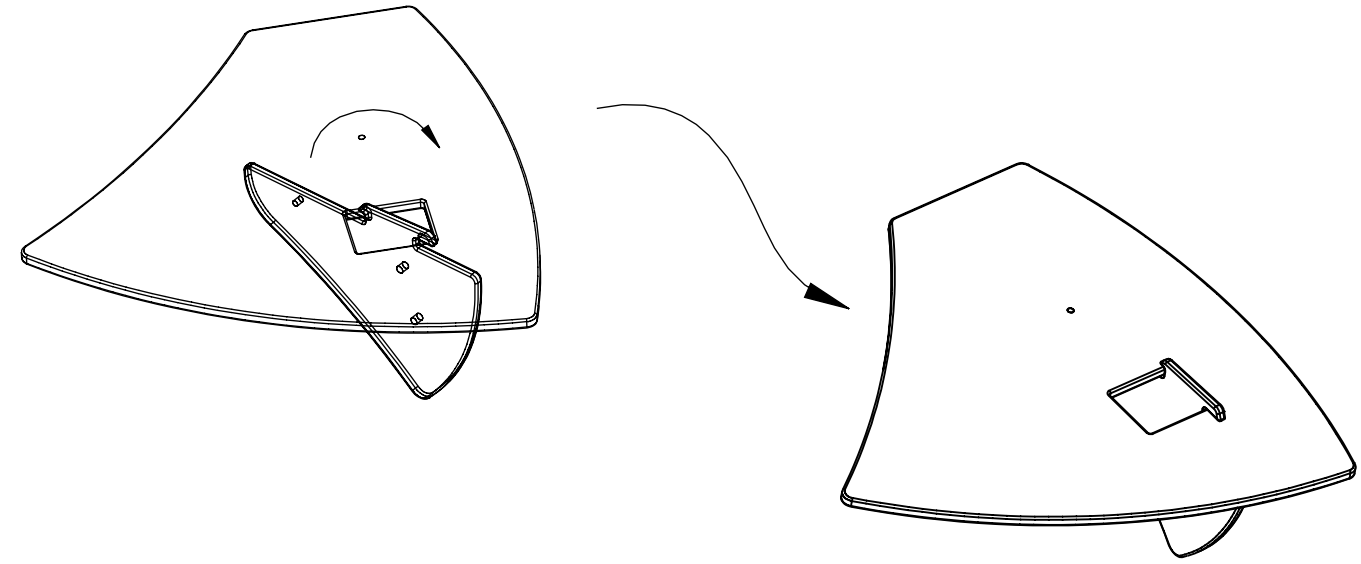

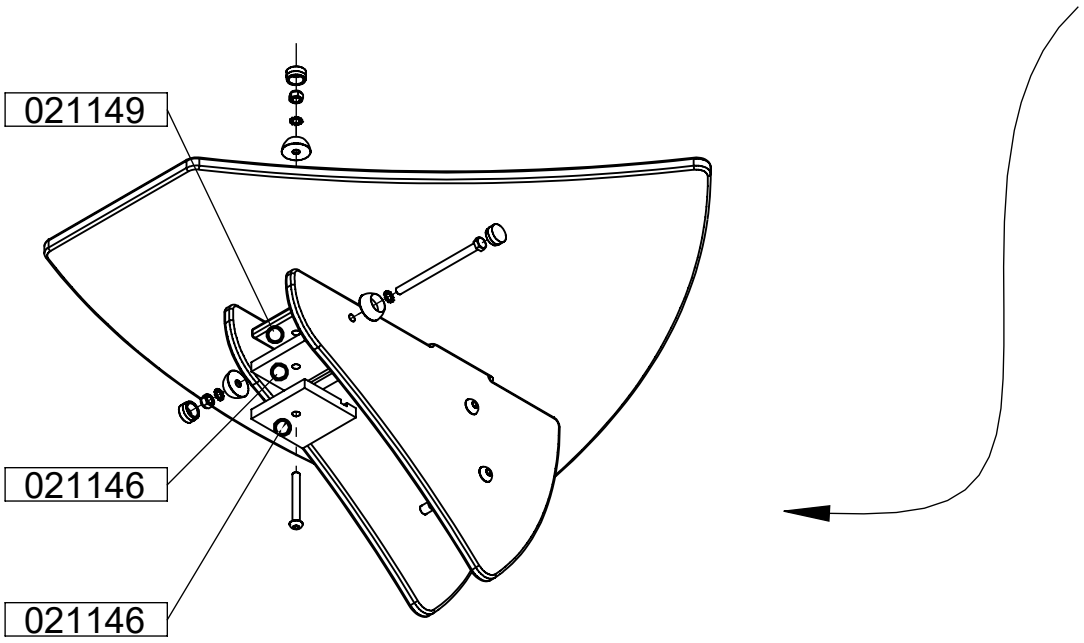

1x 17c032

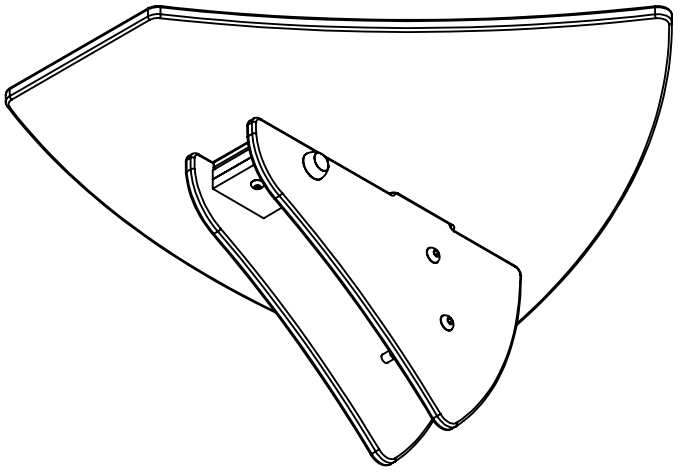

[cm]

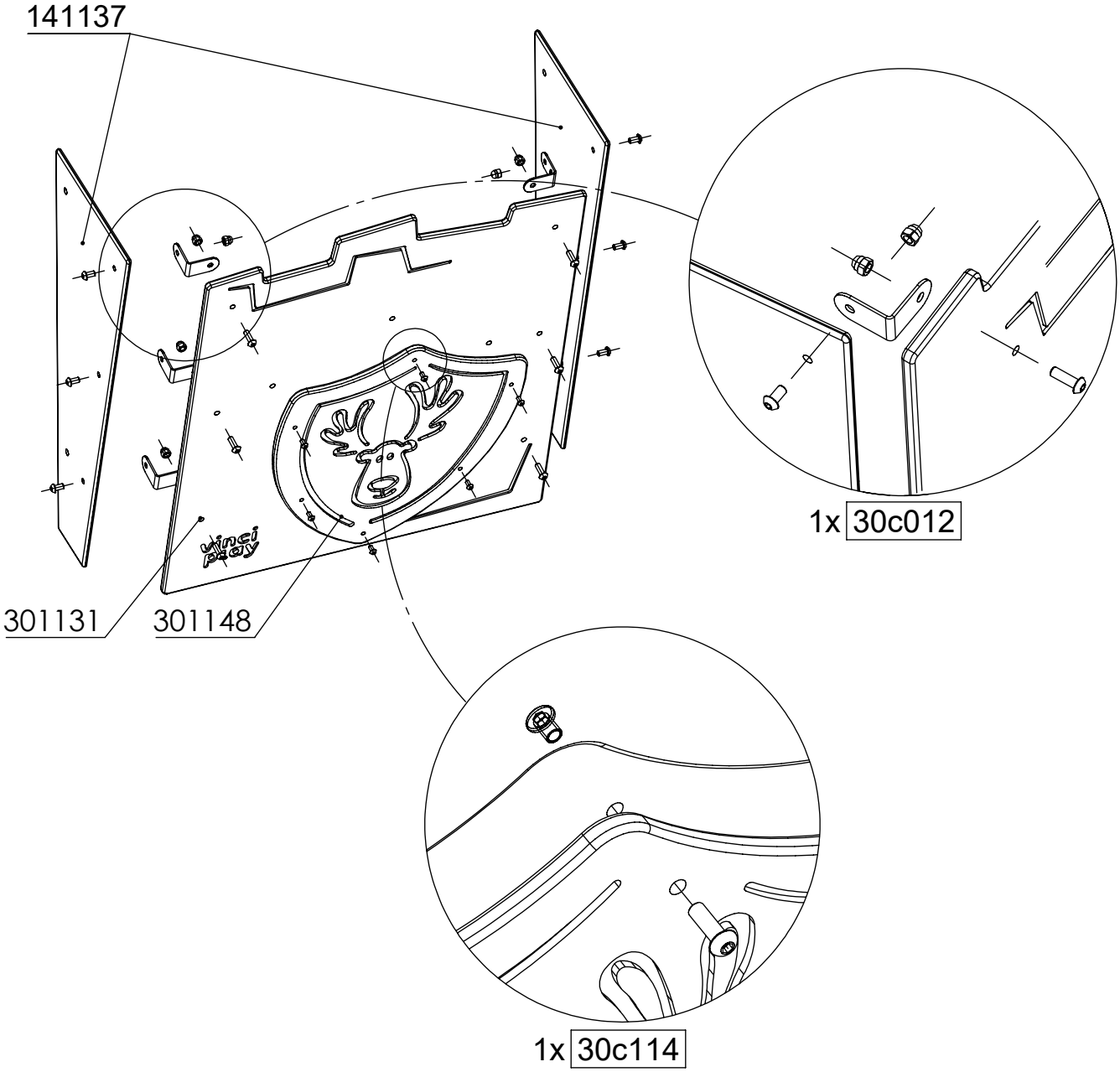

[cm]

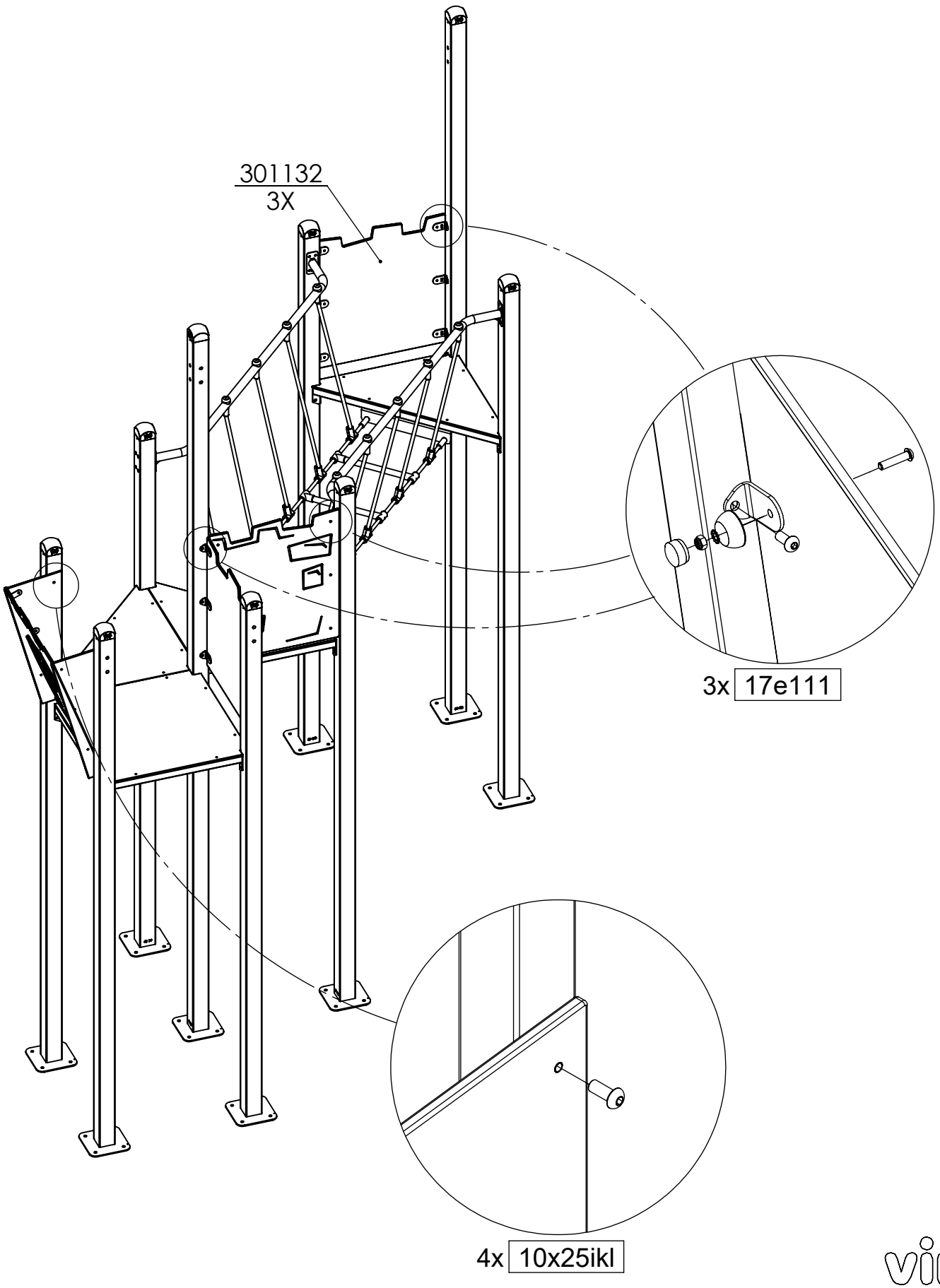

[cm]

vinci play

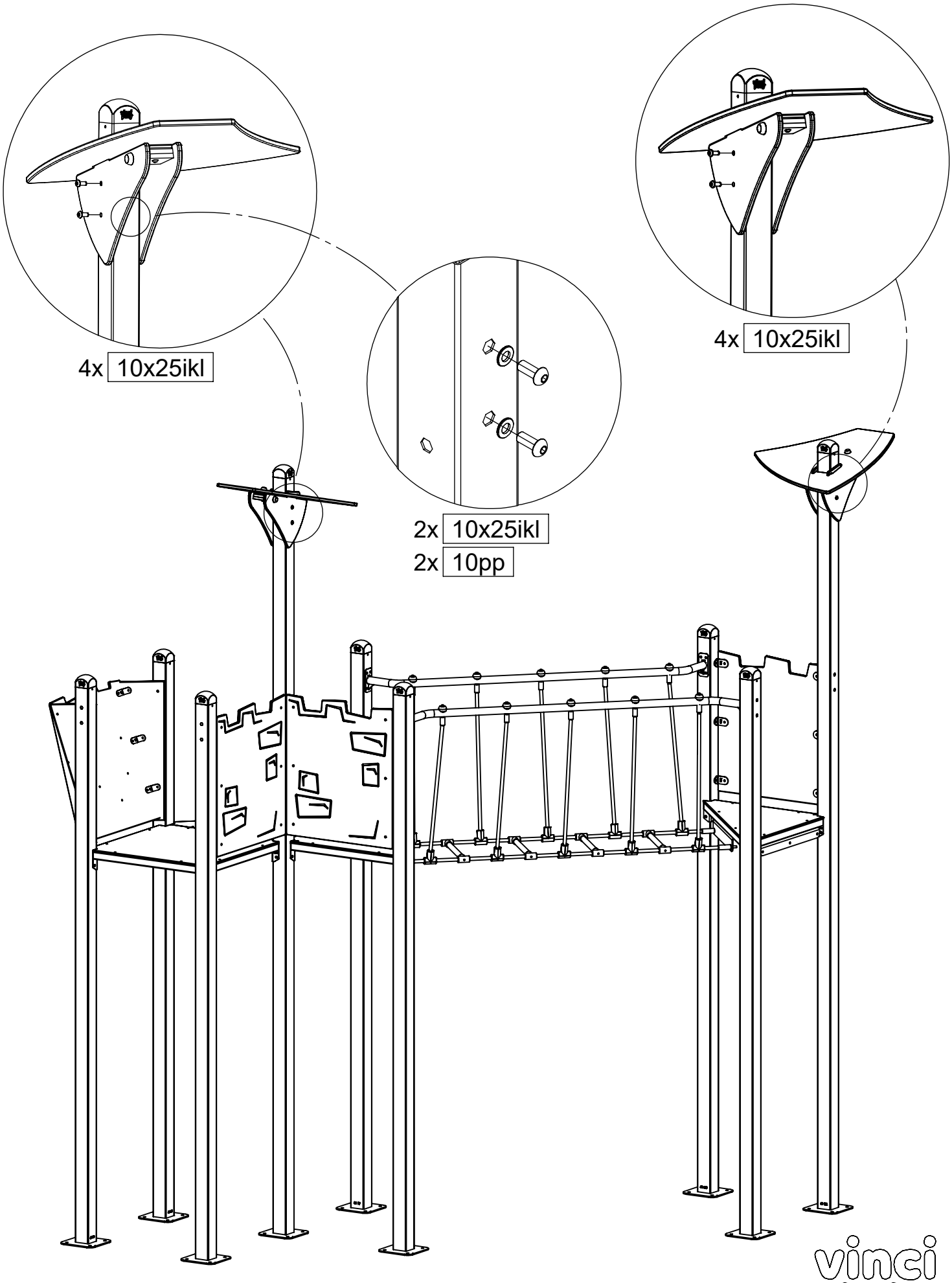
4x 10x25ikl
2x 10x25ikl
2x 10pp
4x 10x25ikl
[cm]
vinci play

01+02+03+04+05+06+07

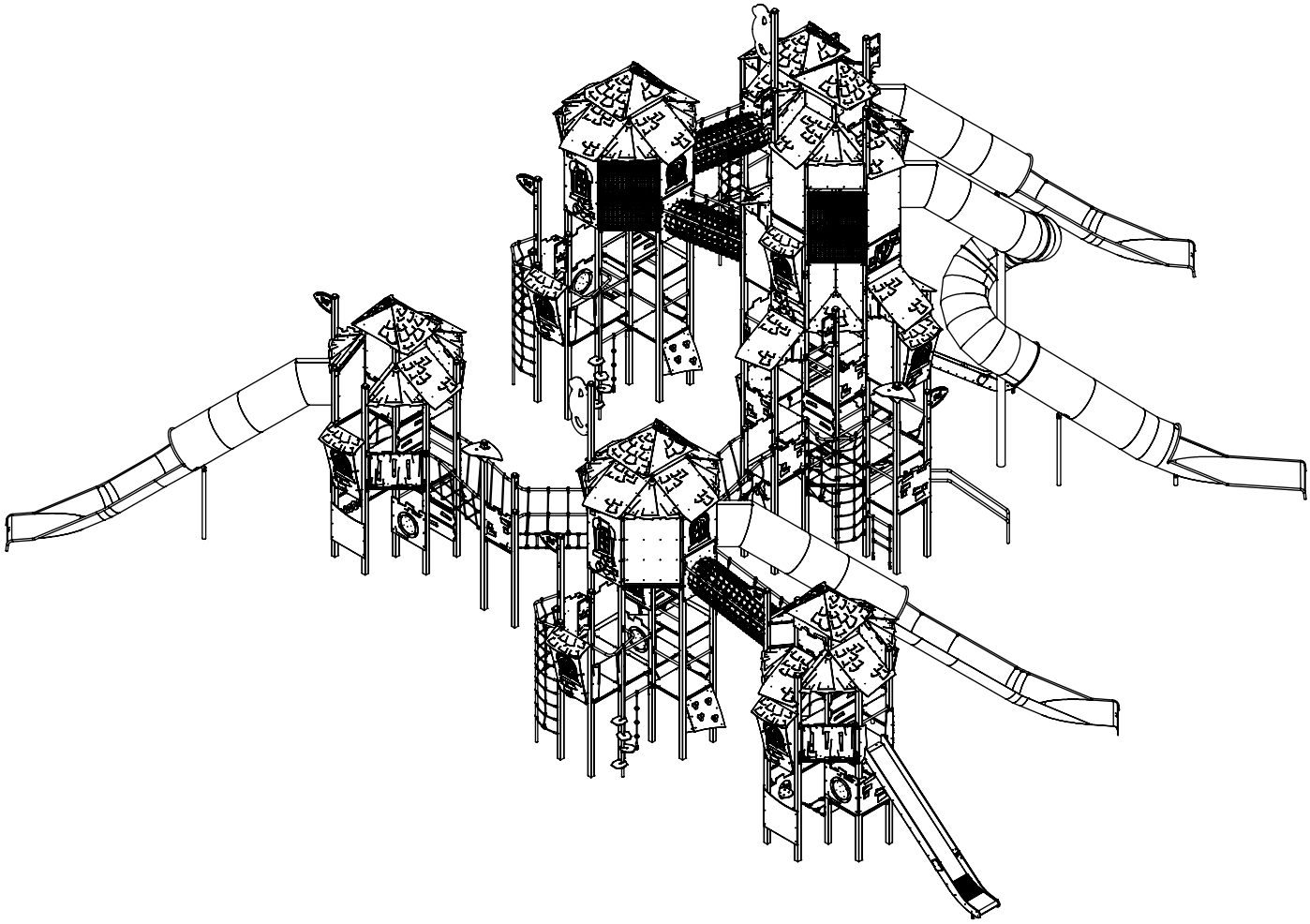

[cm]

vinci play

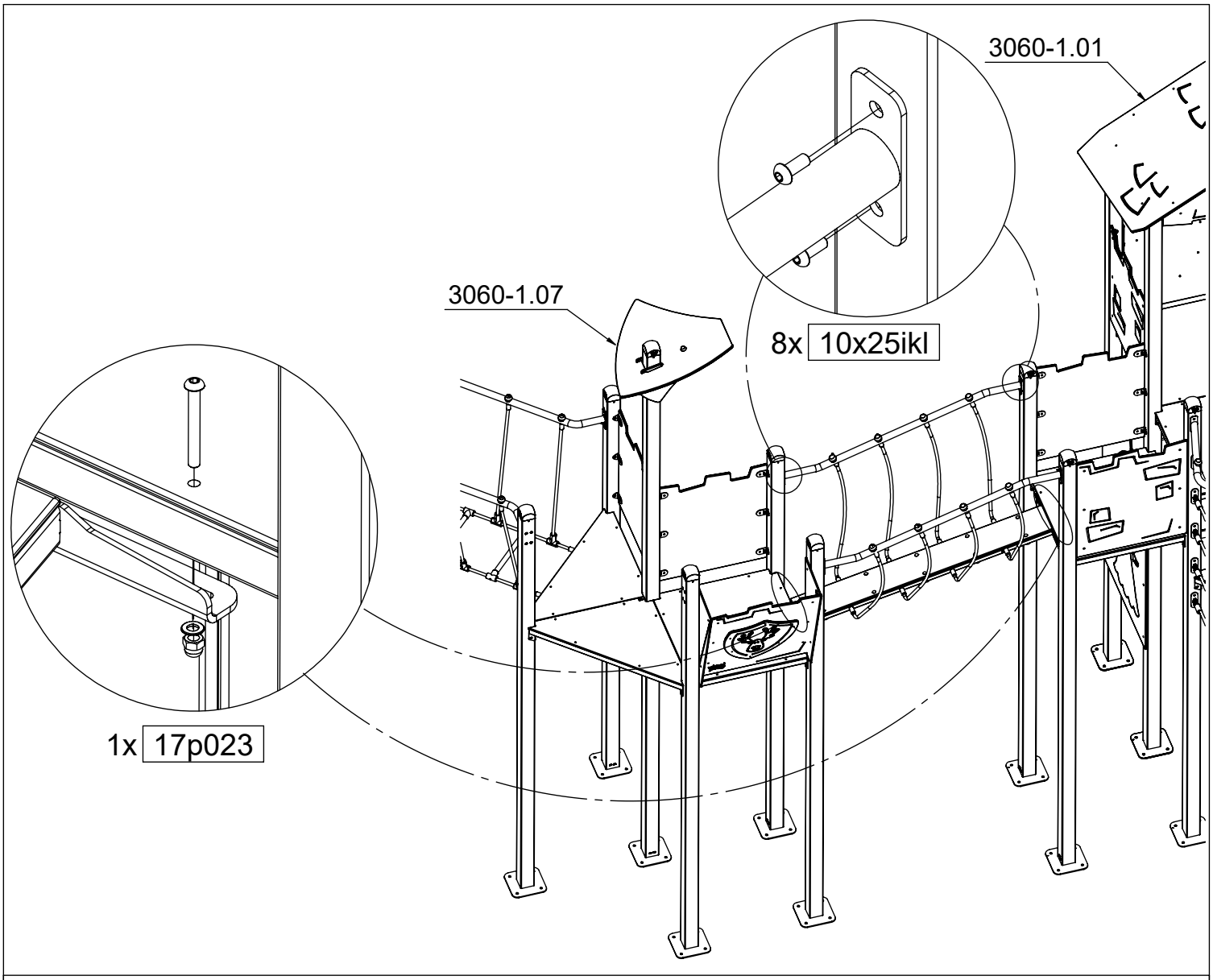
3060-1.01
3060-1.07
8x 10x25ikl
1x 17p023

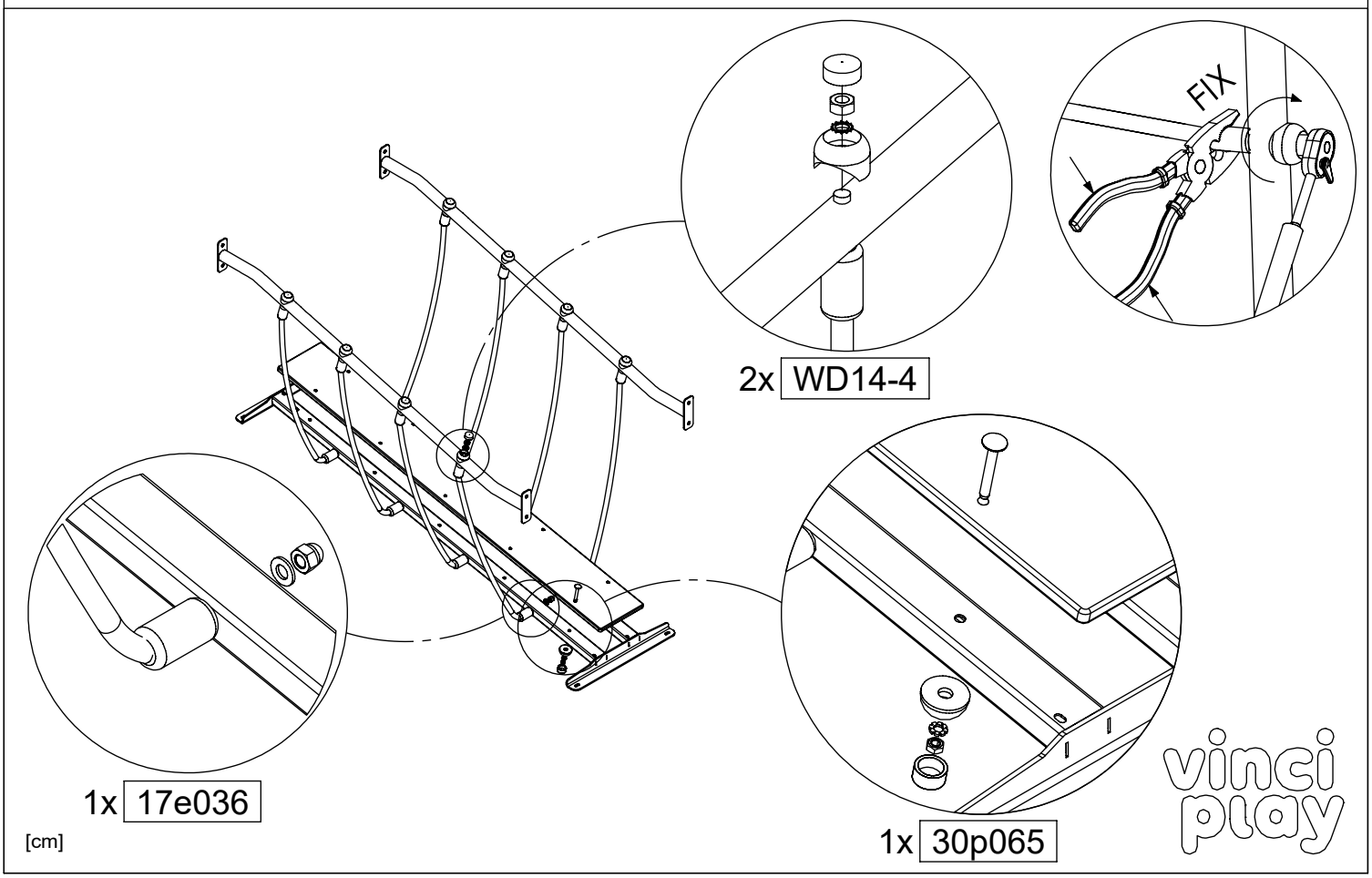
FIX
2x WD14-4
1x 17e036
1x 30p065
[cm]
vinci play

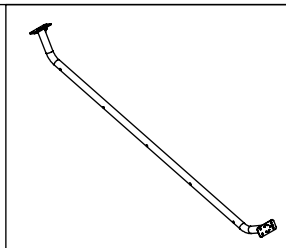

2x 172123

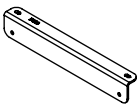

2x b203

16x 10x25ikl

1x 17p023

3060-1.03

3060-1.07

[cm]

vinci play

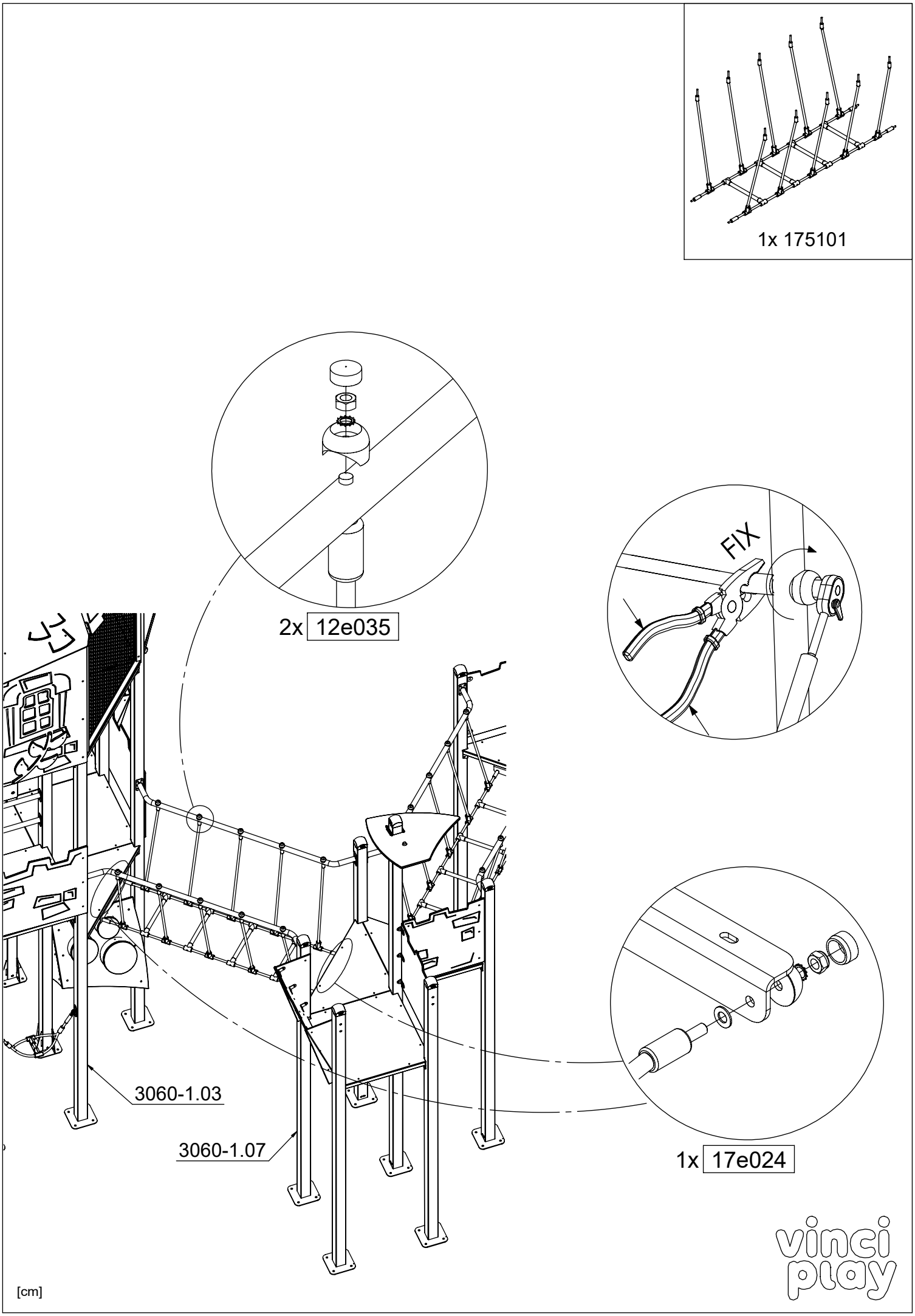
1x 175101
2x 12e035
FIX
3060-1.03
3060-1.07
1x 17e024
[cm]
vinci play

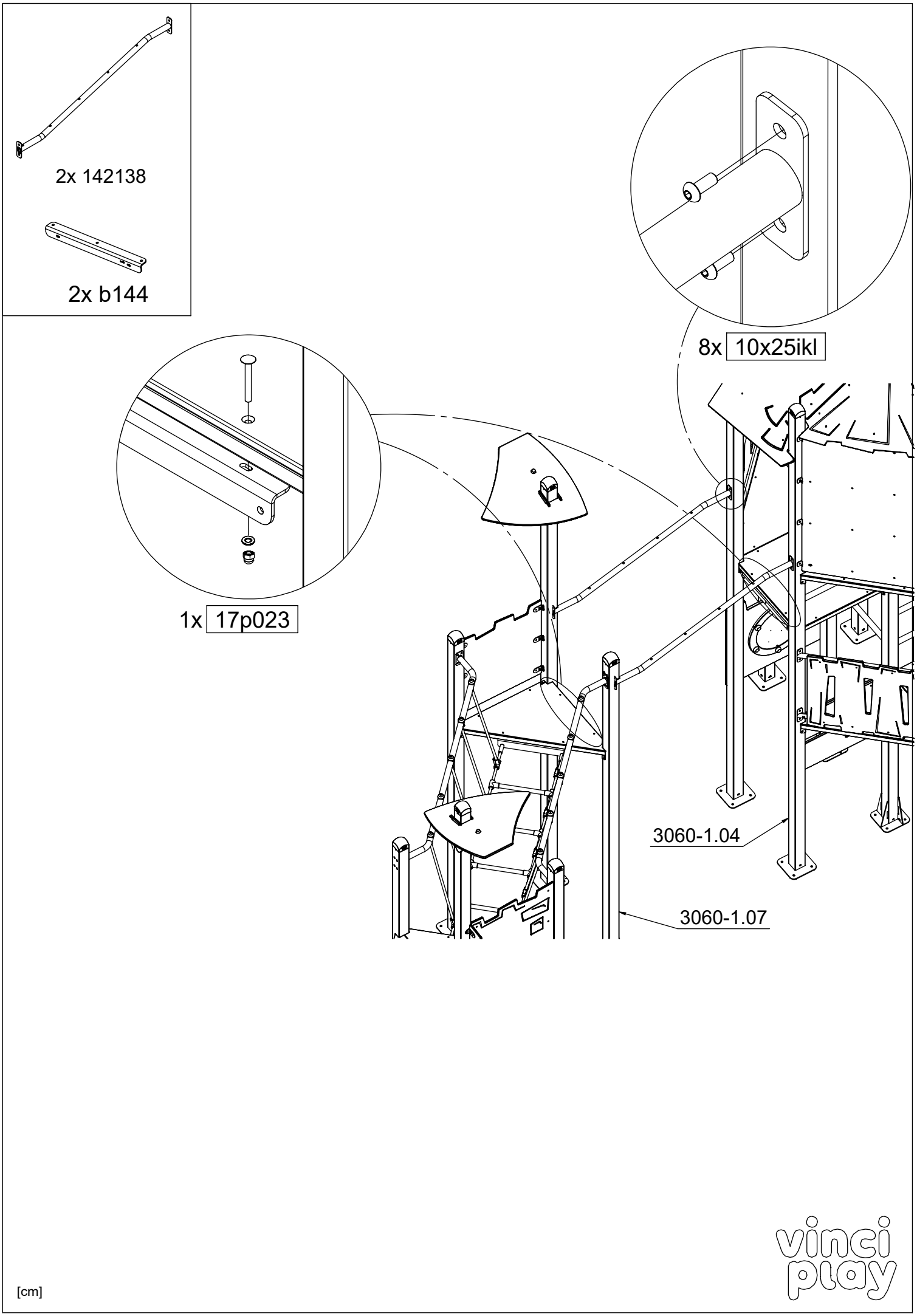
2x 142138
2x b144
8x 10x25ikl
1x 17p023
3060-1.04
3060-1.07
[cm]

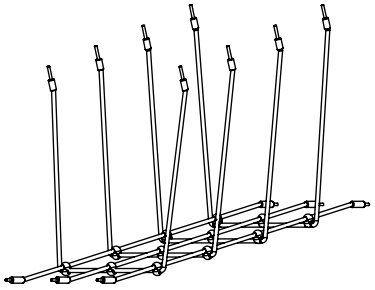

1x 145141

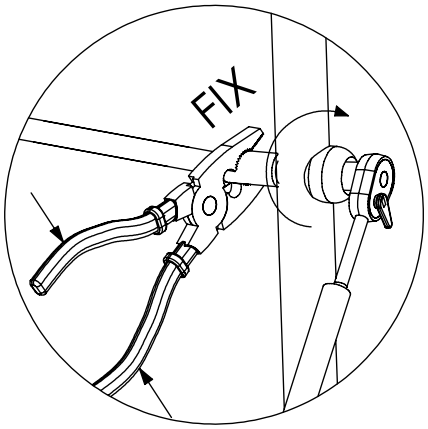

3060-1.04

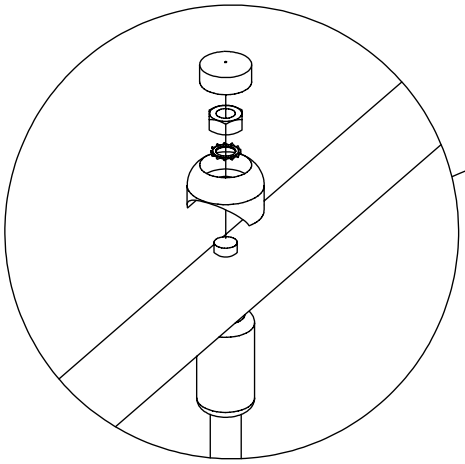

2x WD14-4

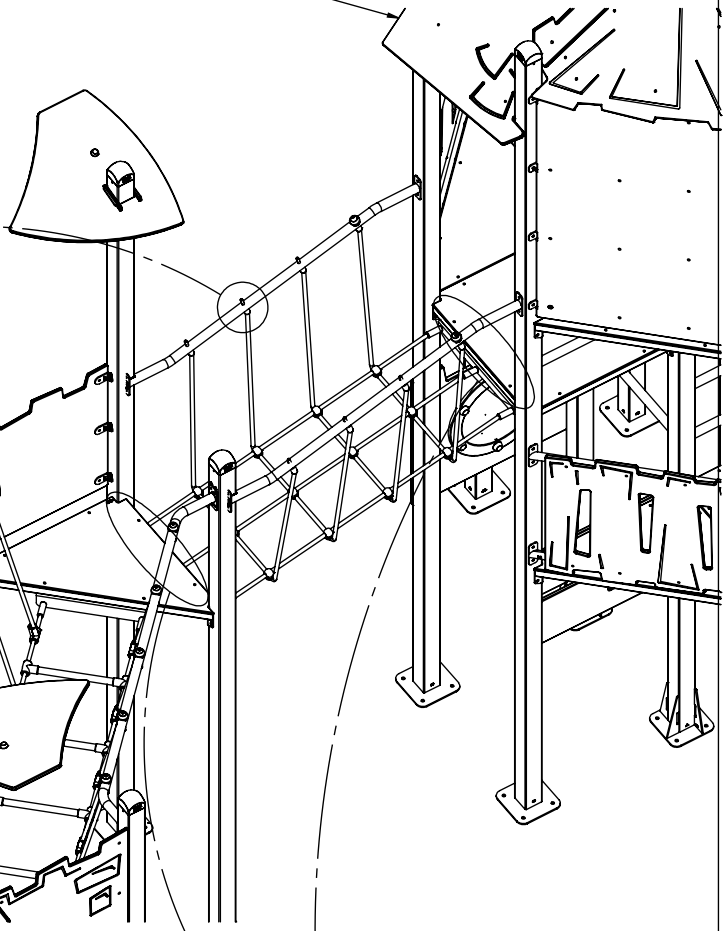

3060-1.07

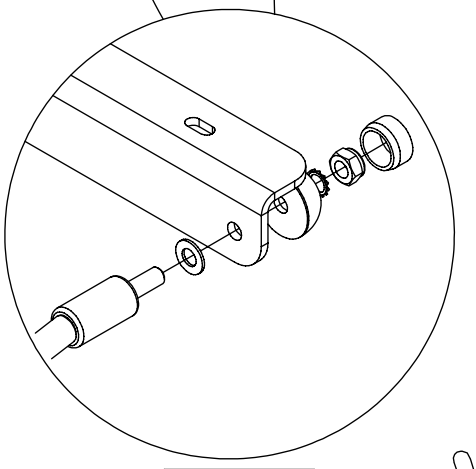

1x 17e031

[cm]

3060-1.01

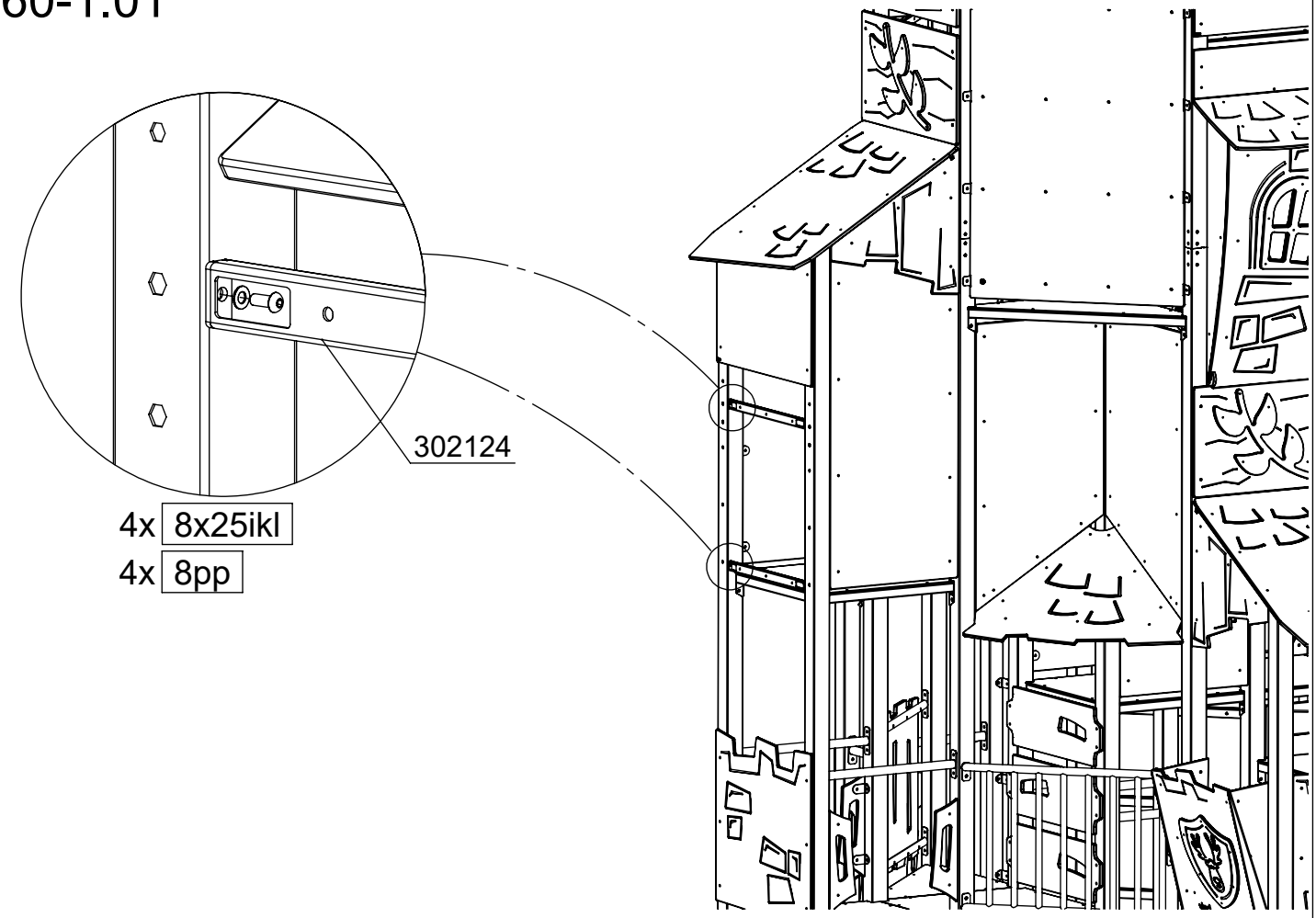

4x 8x25ikl
4x 8pp

3060-1.01

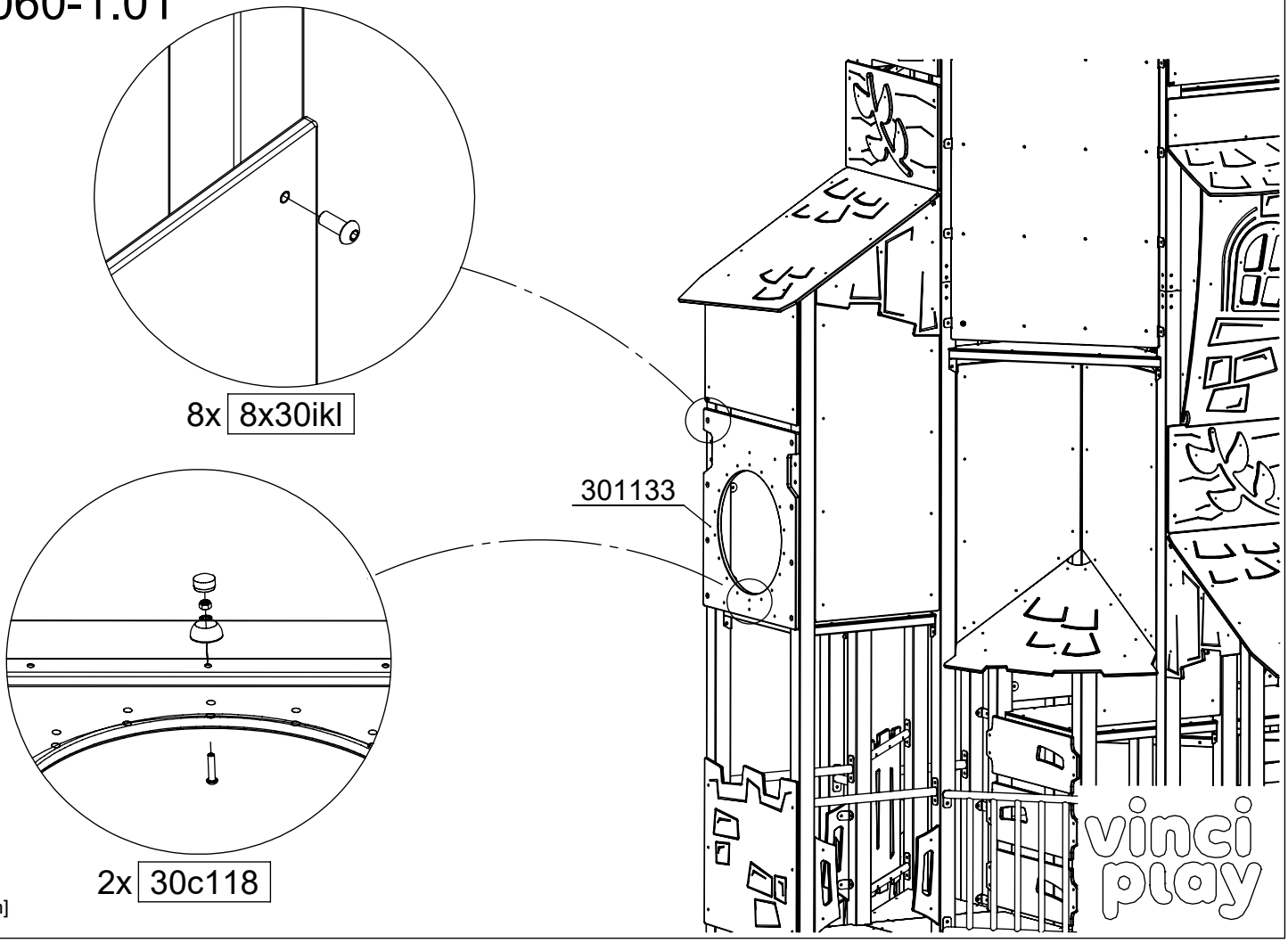

8x 8x30ikl

2x 30c118

[cm]

3060-1.02

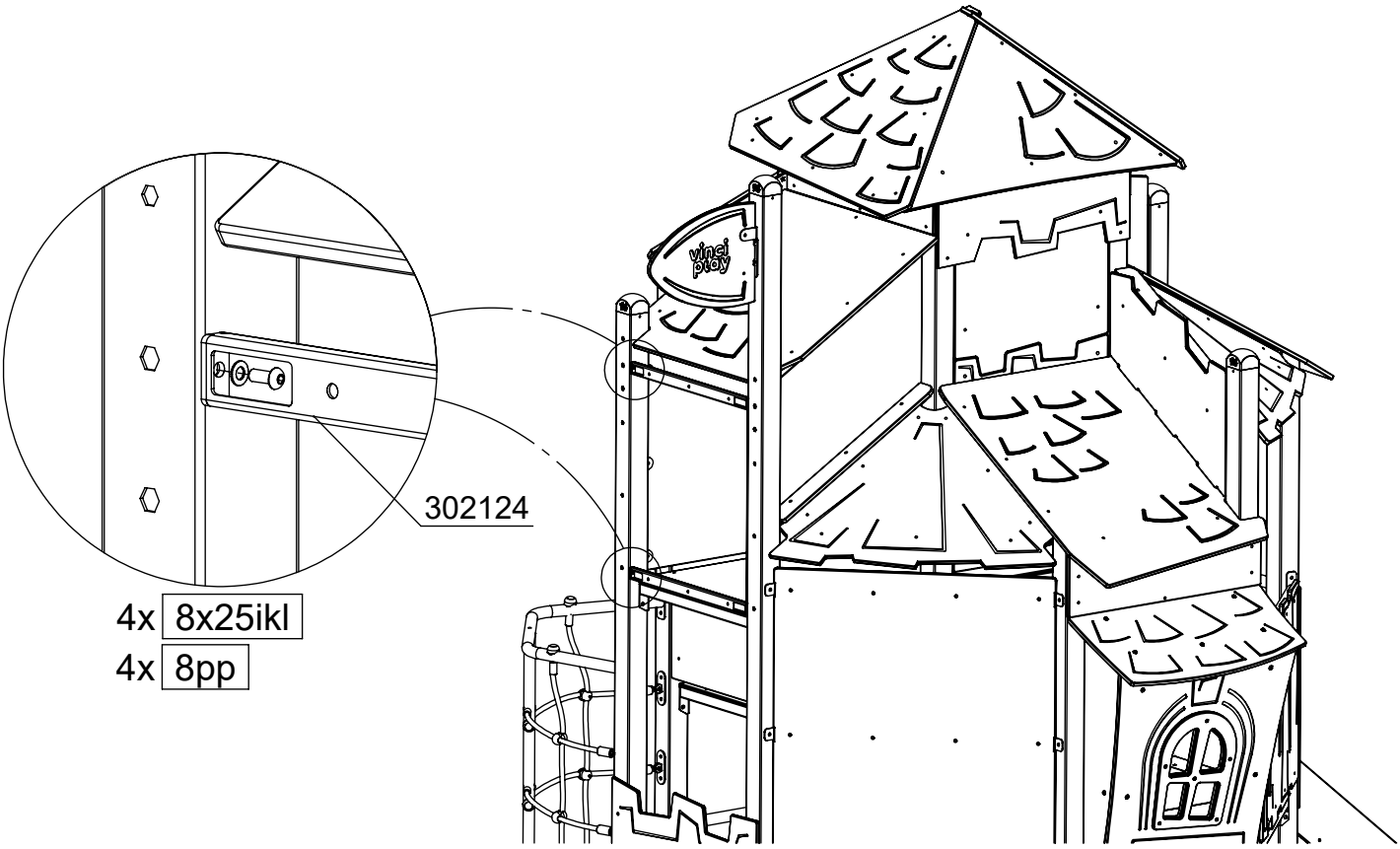

3060-1.02

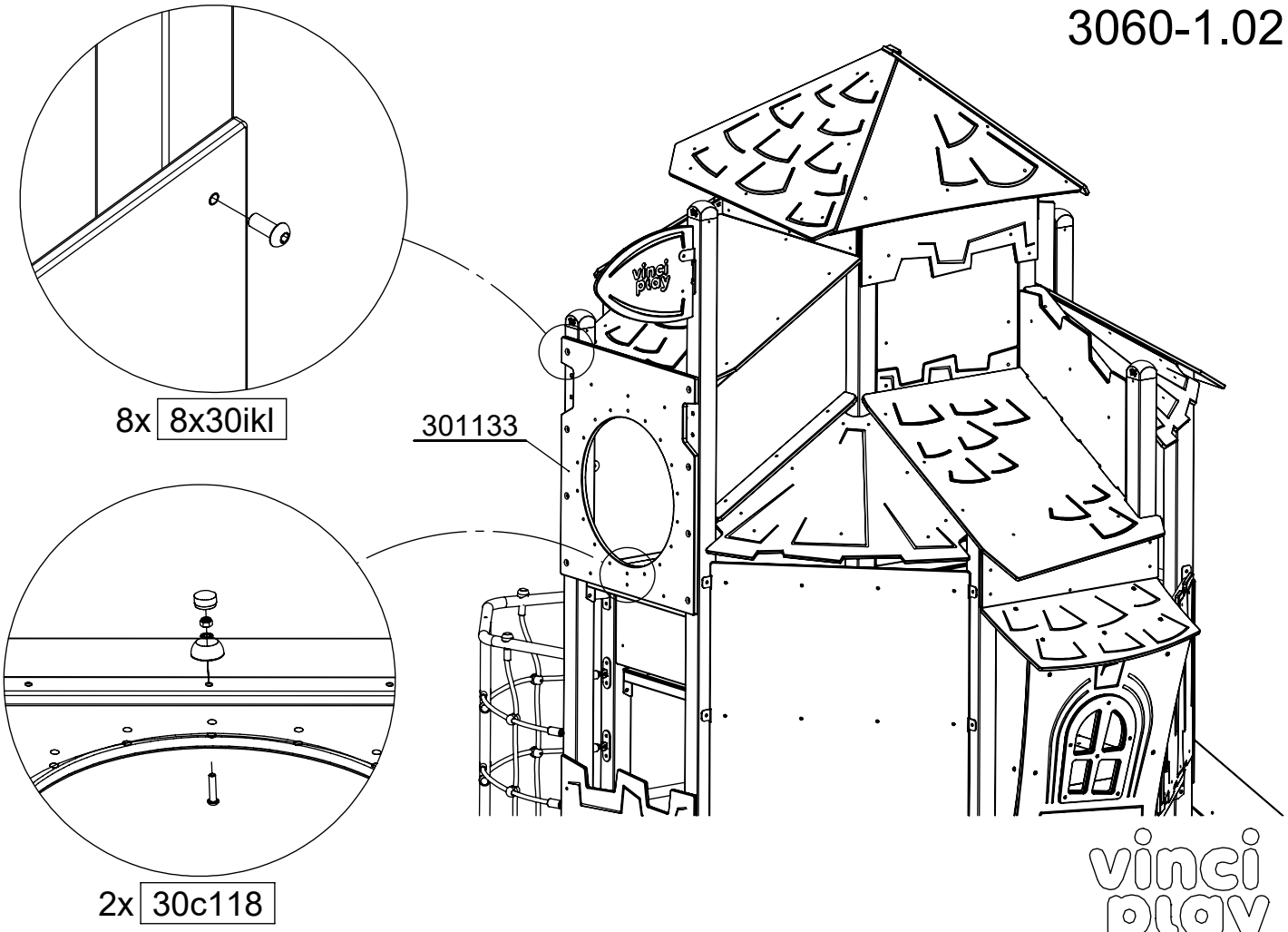

[cm]

3060-1.03

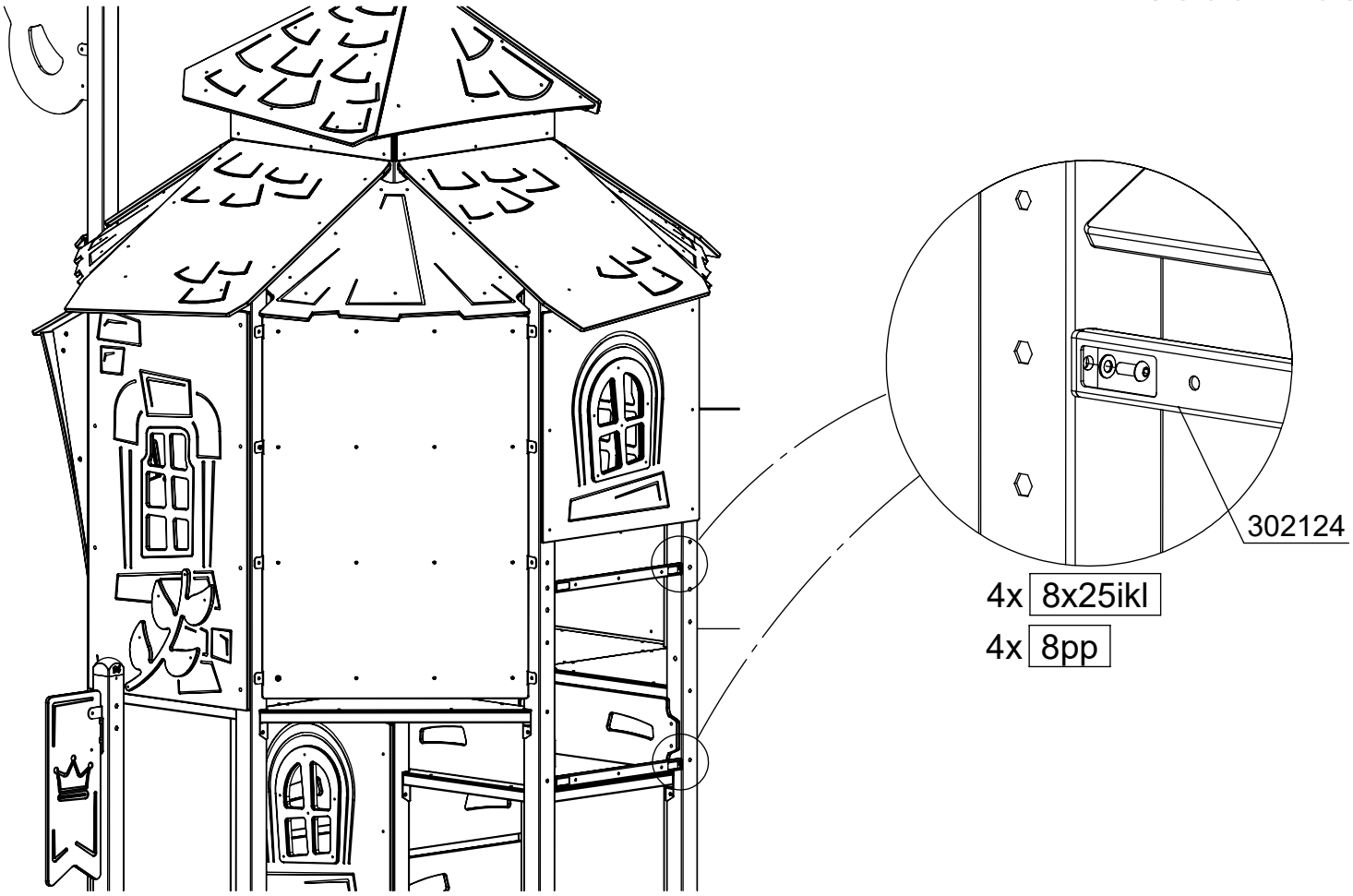

3060-1.03

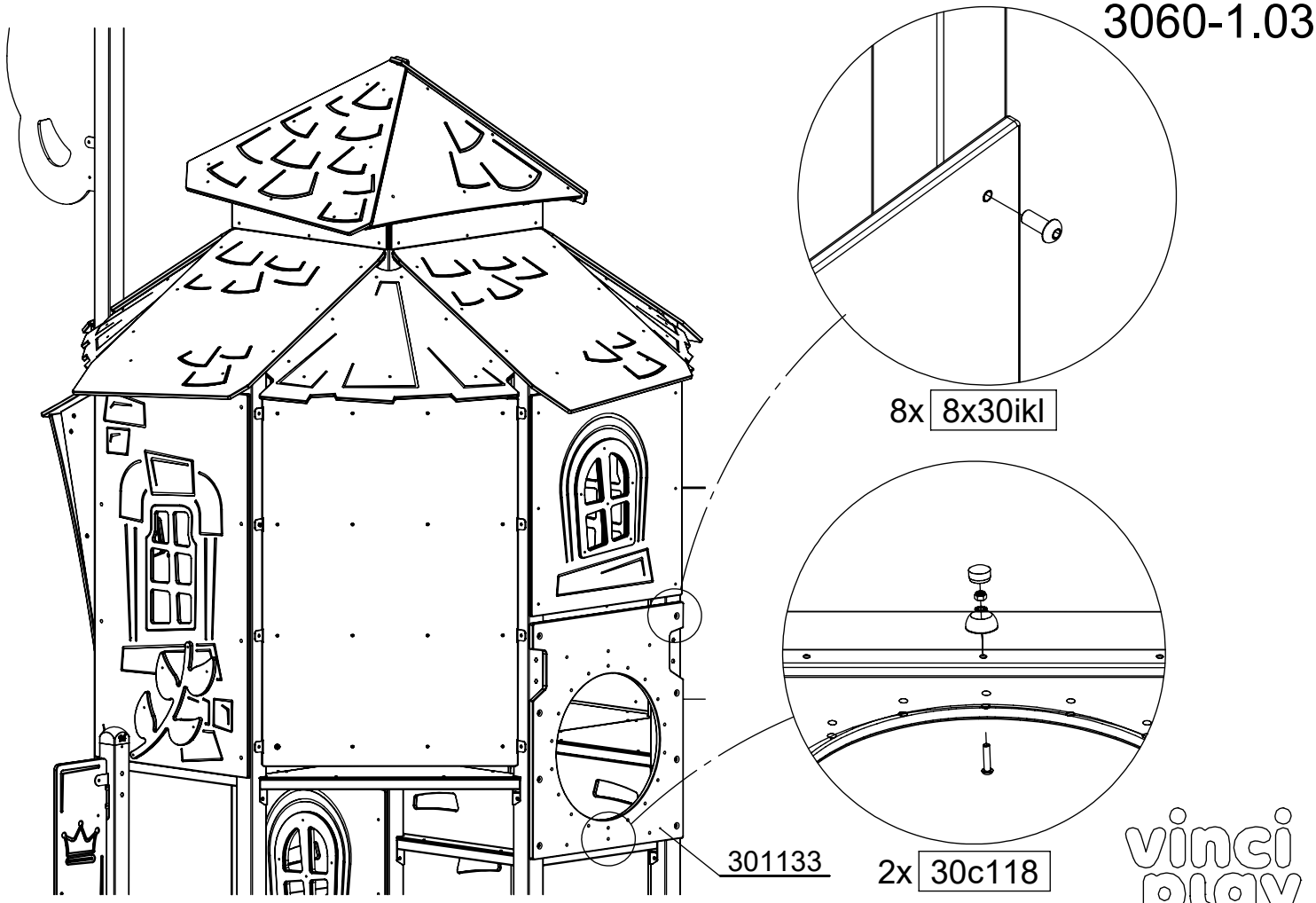

[cm]

vinci play

3060-1.05

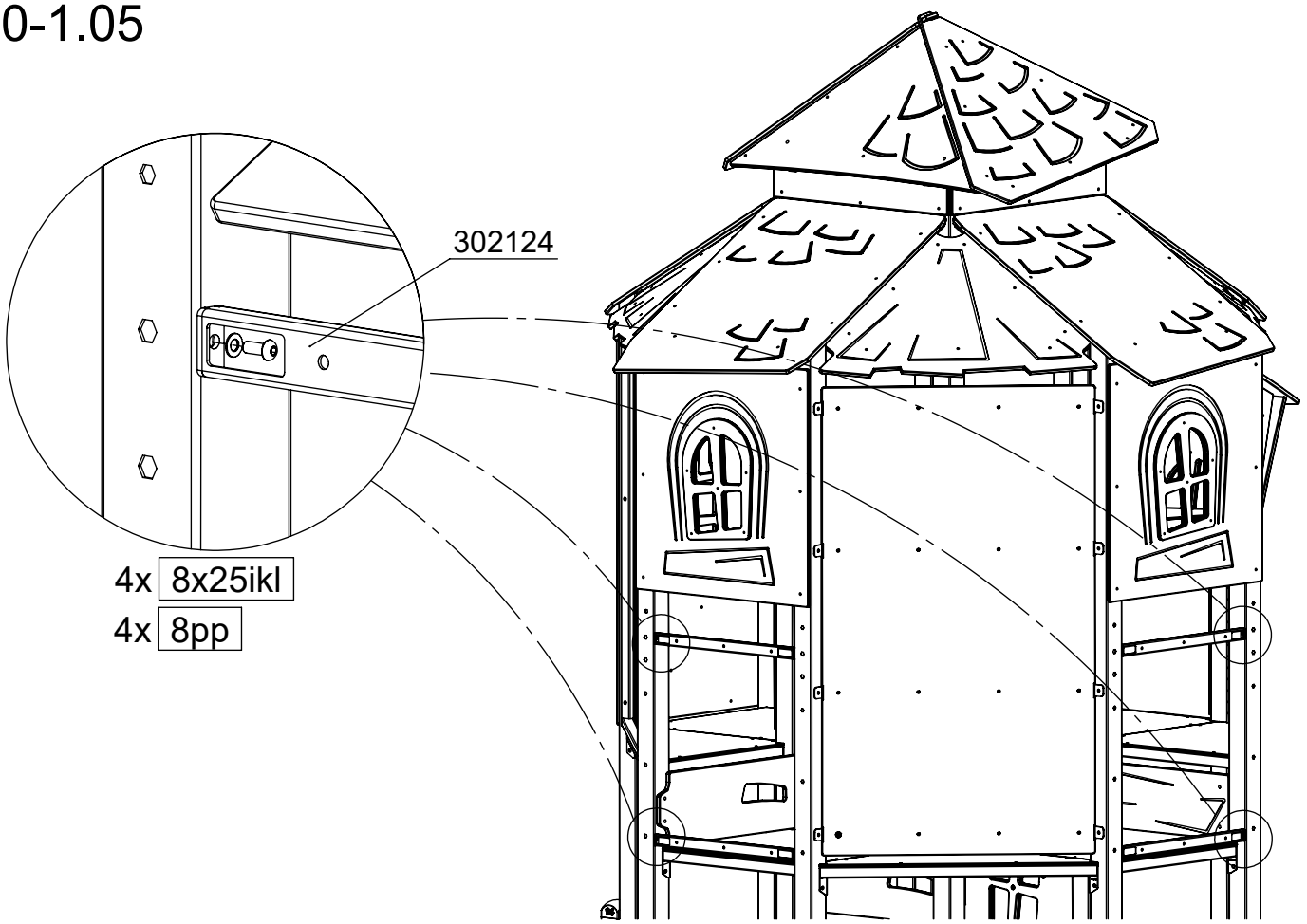

3060-1.05

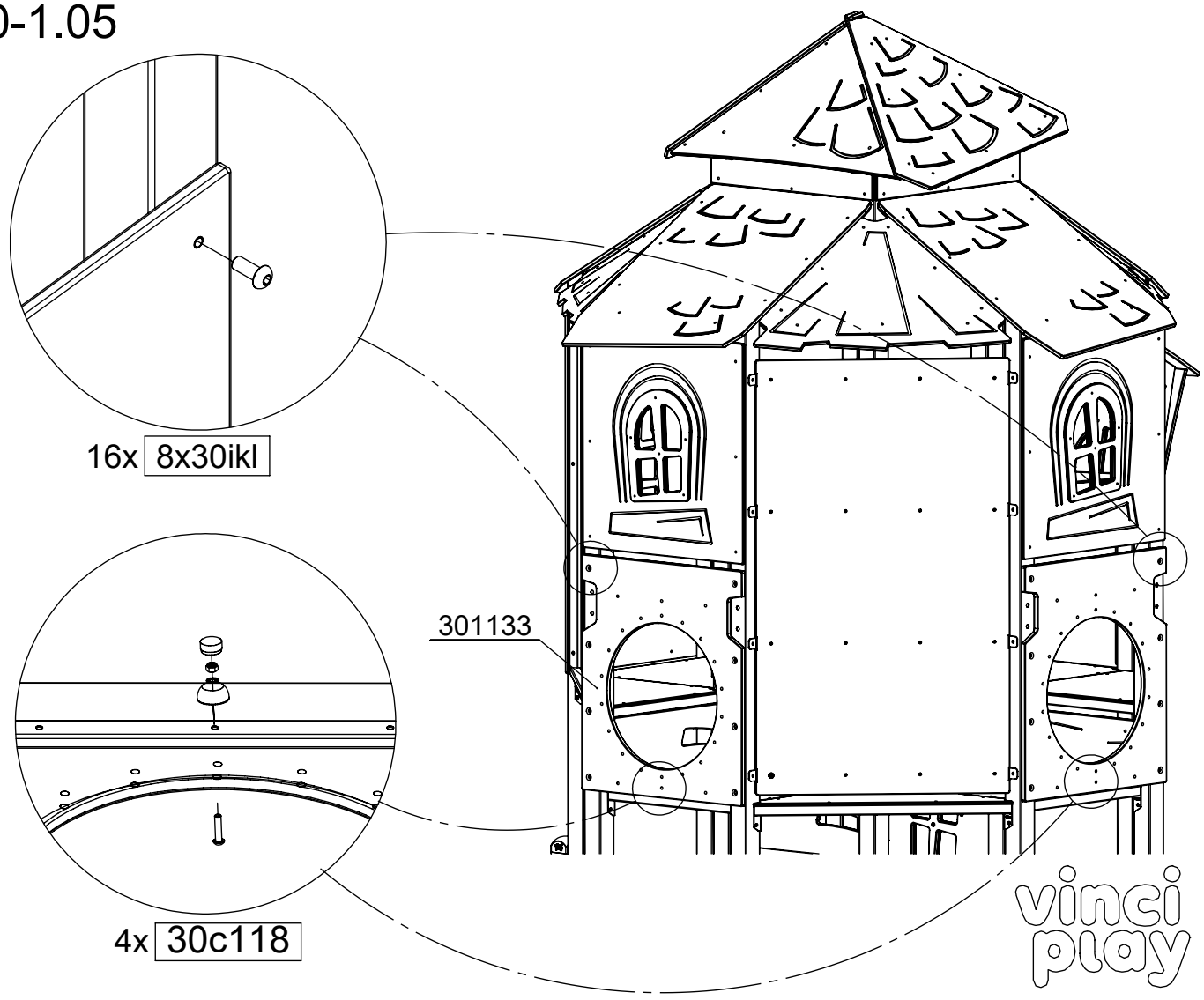

[cm]

vinci play

3060-1.06

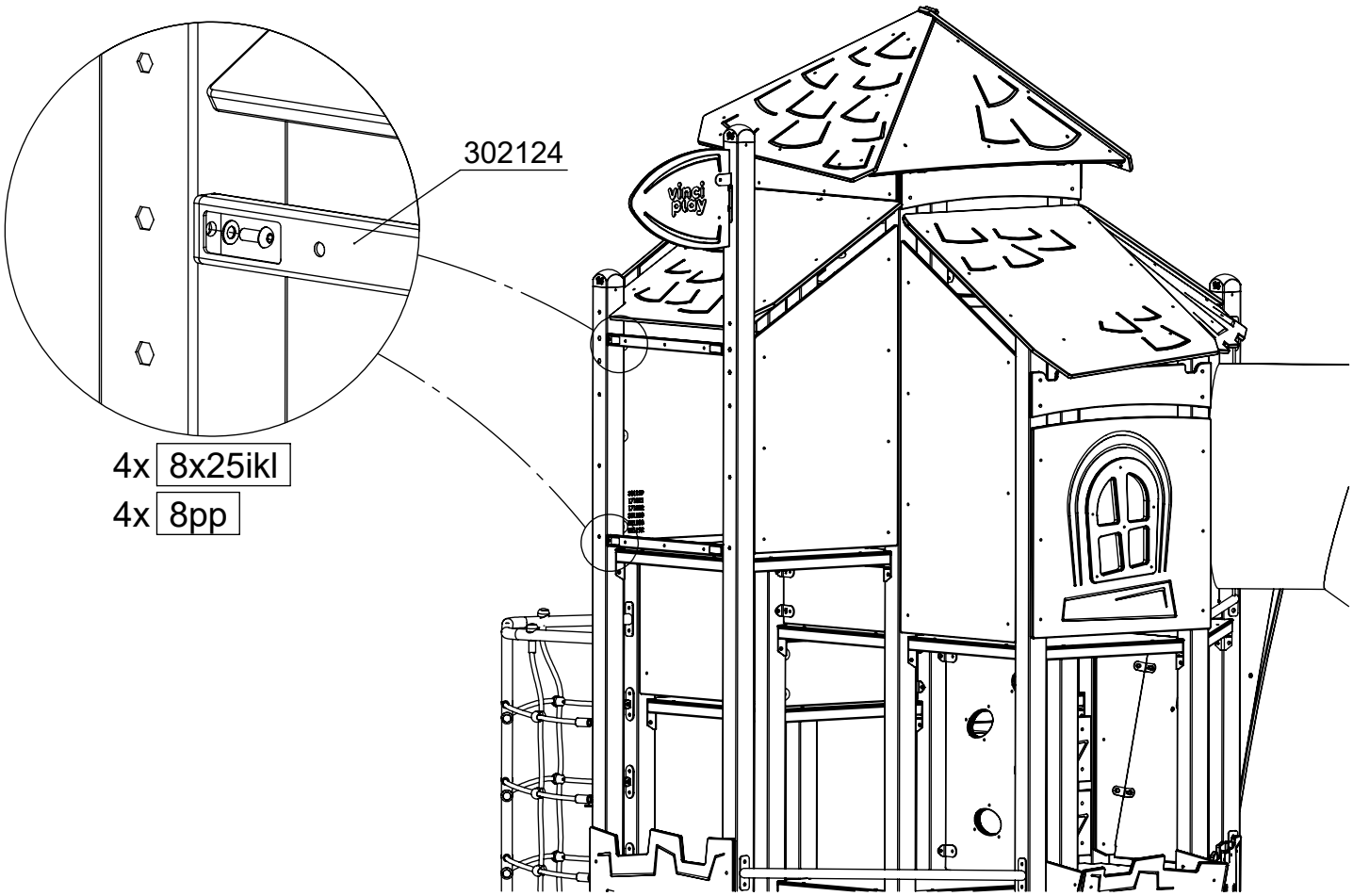

3060-1.06

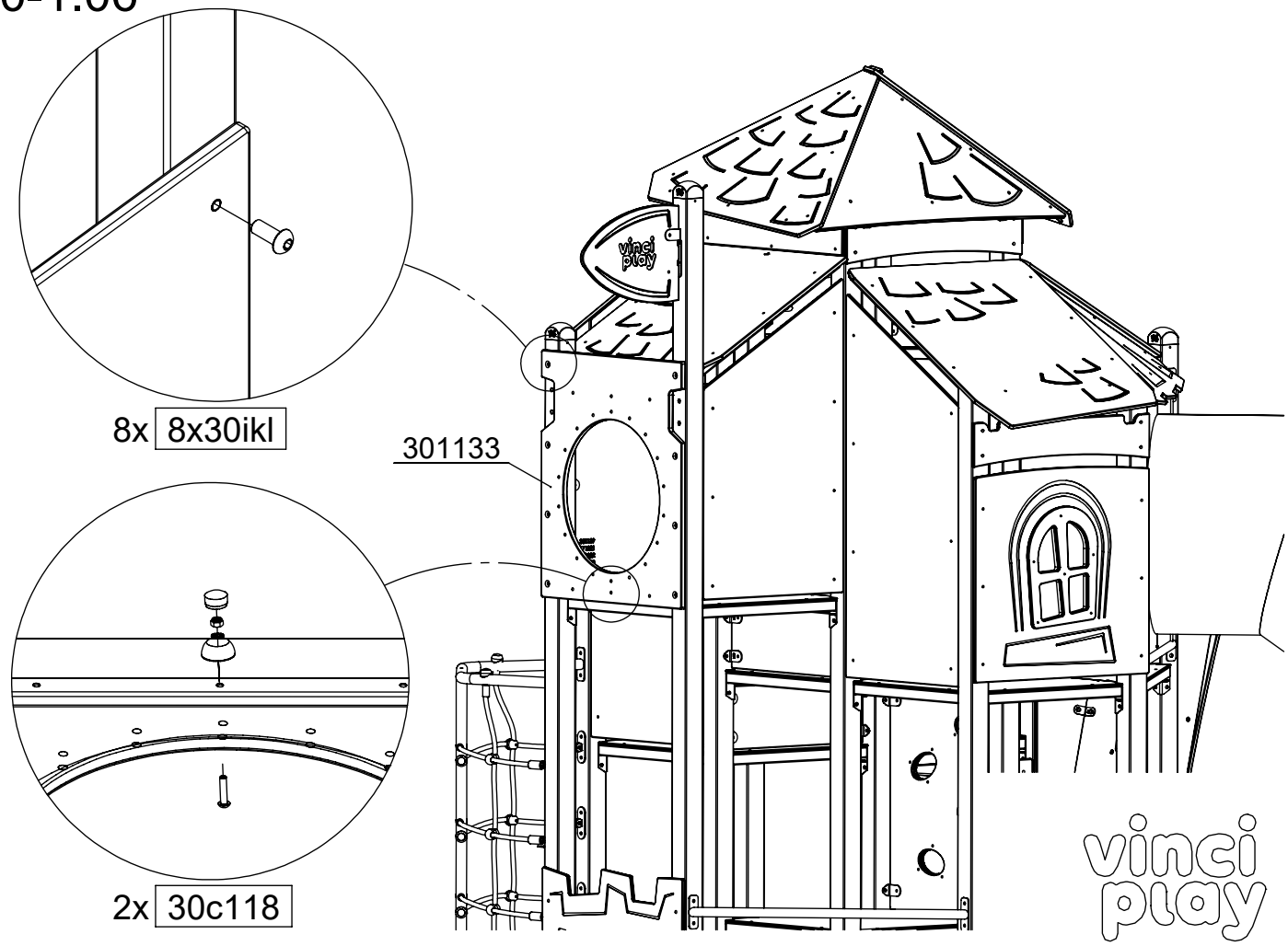

[cm]

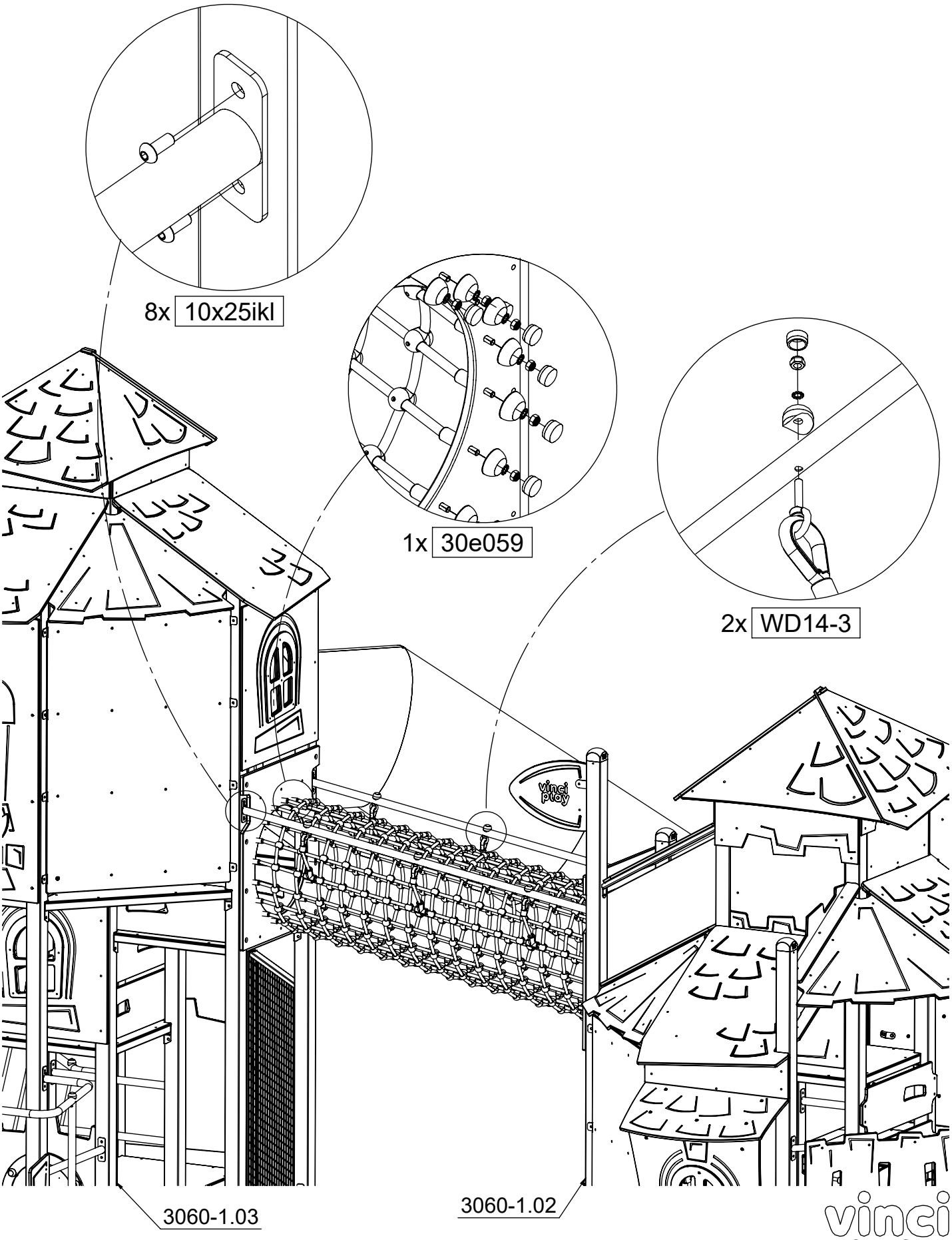
8x 10x25ikl
1x 30e059
2x WD14-3
3060-1.03
3060-1.02
vinci play
[cm]

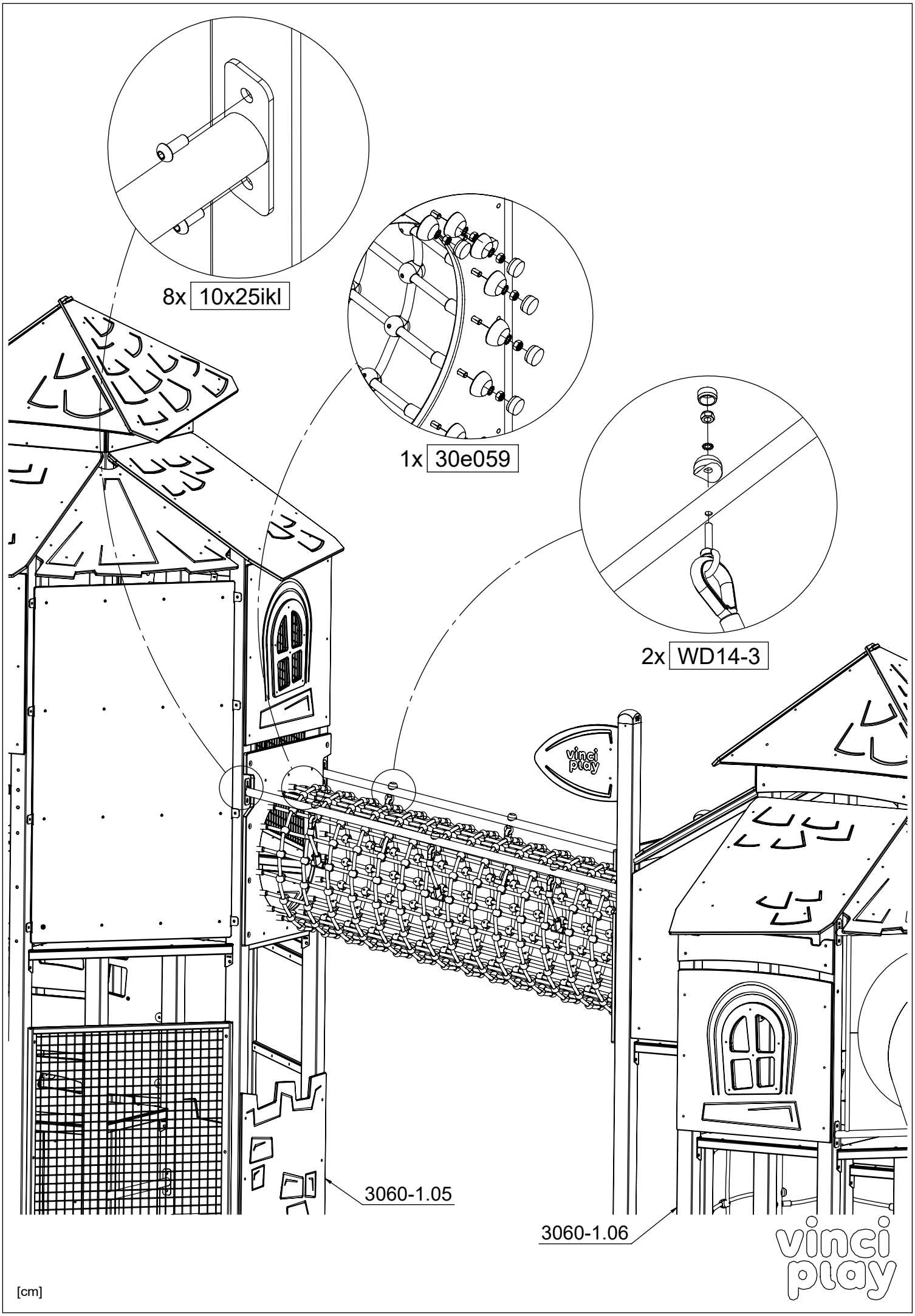
8x 10x25ikl
1x 30e059
2x WD14-3
3060-1.05
3060-1.06
[cm]

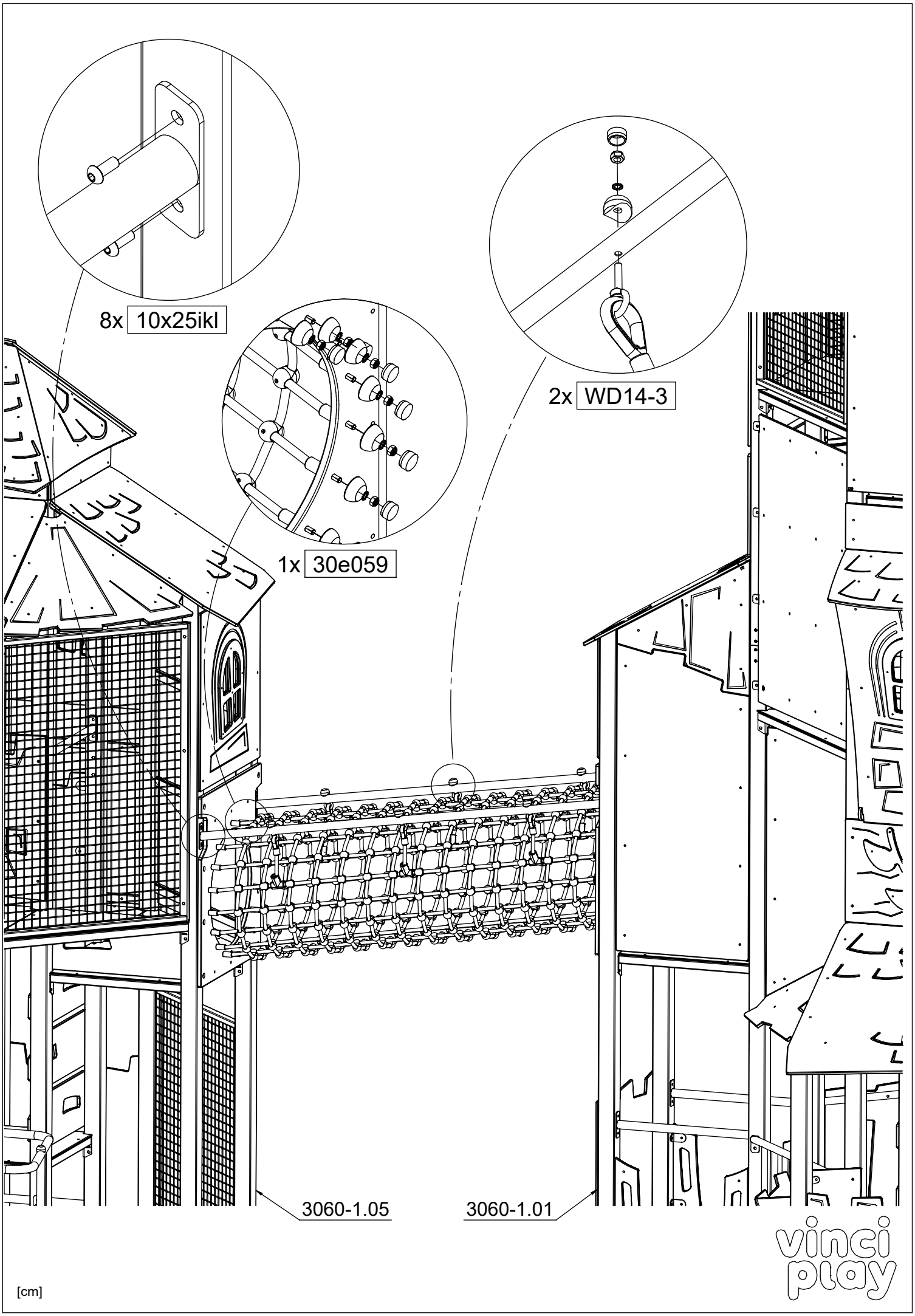
8x 10x25ikl
1x 30e059
2x WD14-3
3060-1.05
3060-1.01
[cm]
vinci play

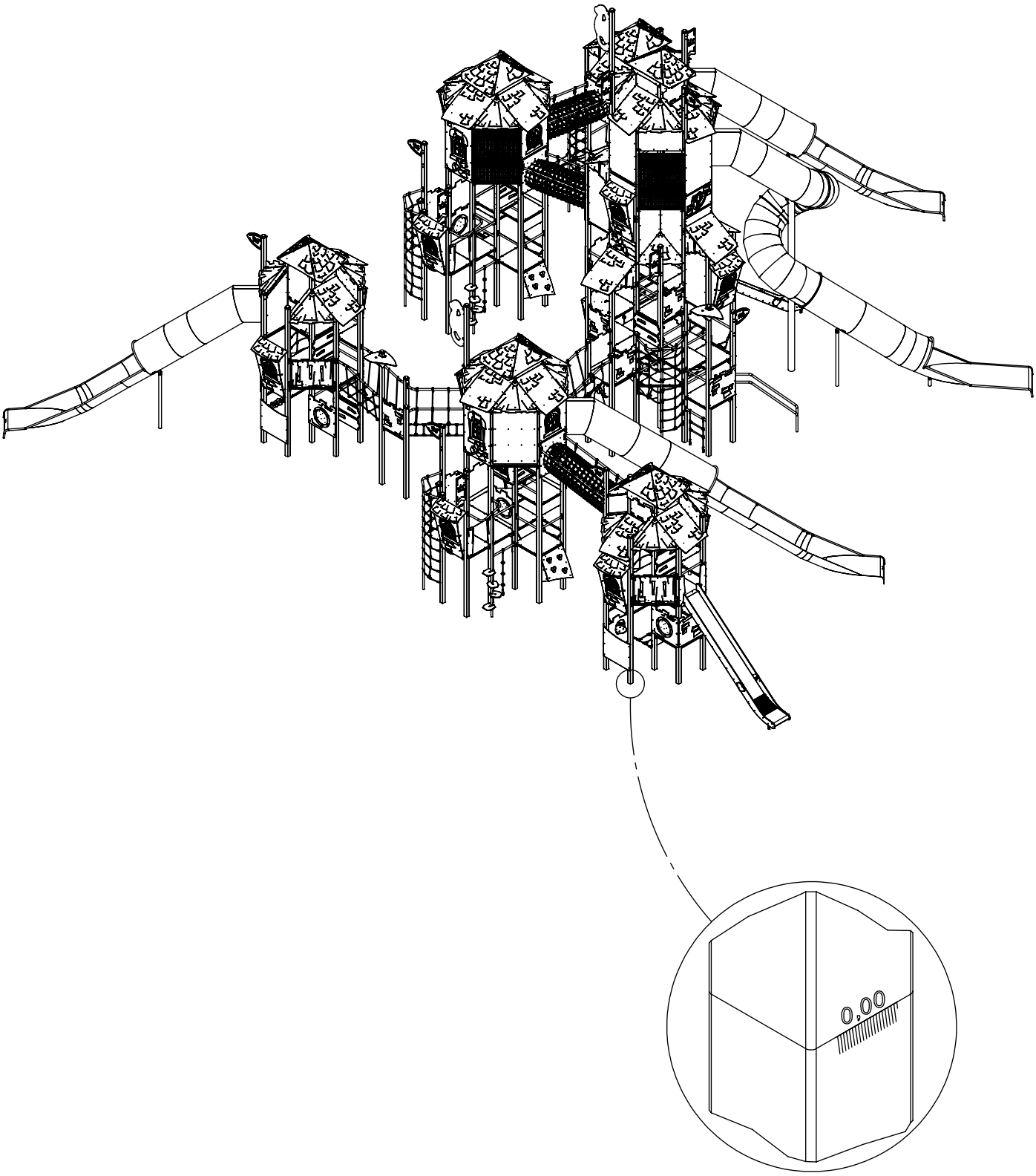

[cm]

vinci play

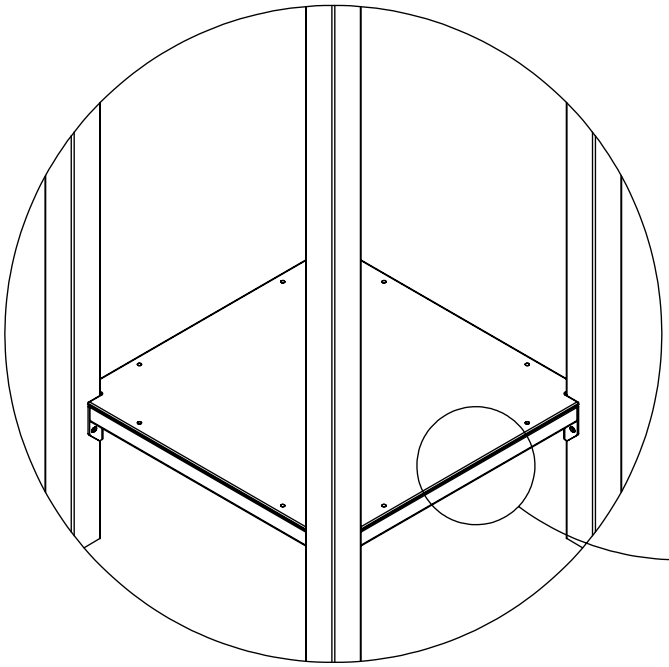

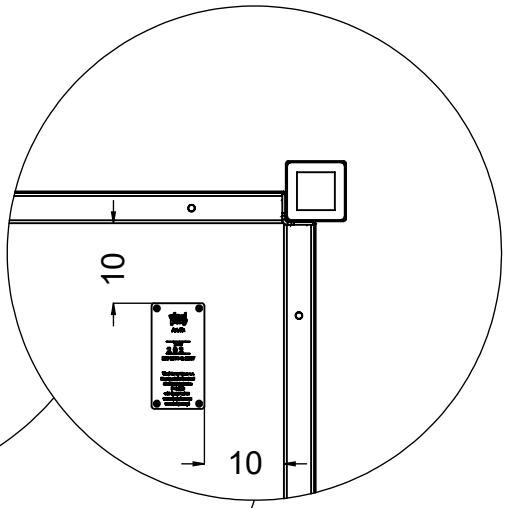
10
10

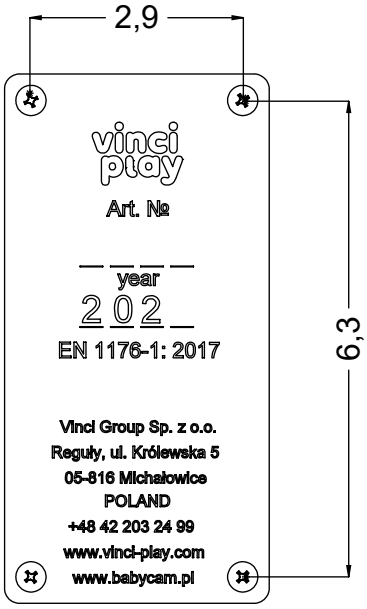
2,9
6,3
vinci play
Art. №
year
202
EN 1176-1: 2017
Vinci Group Sp. z o.o.
Reguły, ul. Królewska 5
05-816 Michałowice
POLAND
+48 42 203 24 99
www.vinci-play.com
www.babycam.pl

V001

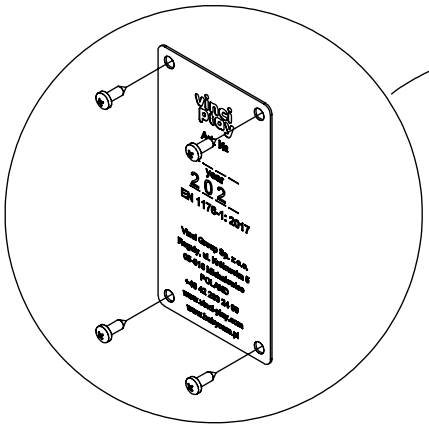

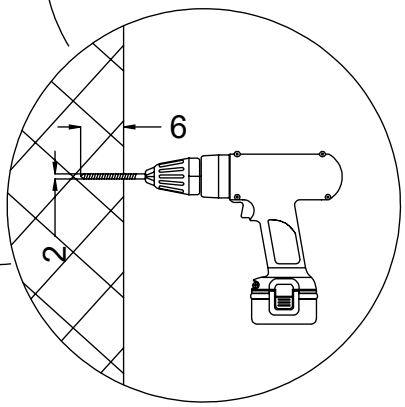
6
2

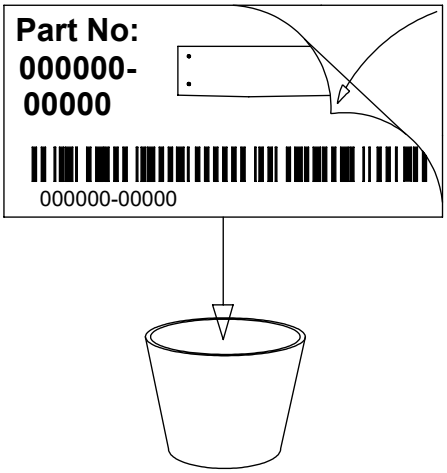
Part No:
000000-
00000
000000-00000

[cm]