Installation Instruction Issue Number. 04

Unit Name: Merrymeet Plus Reference No. LTH/MER

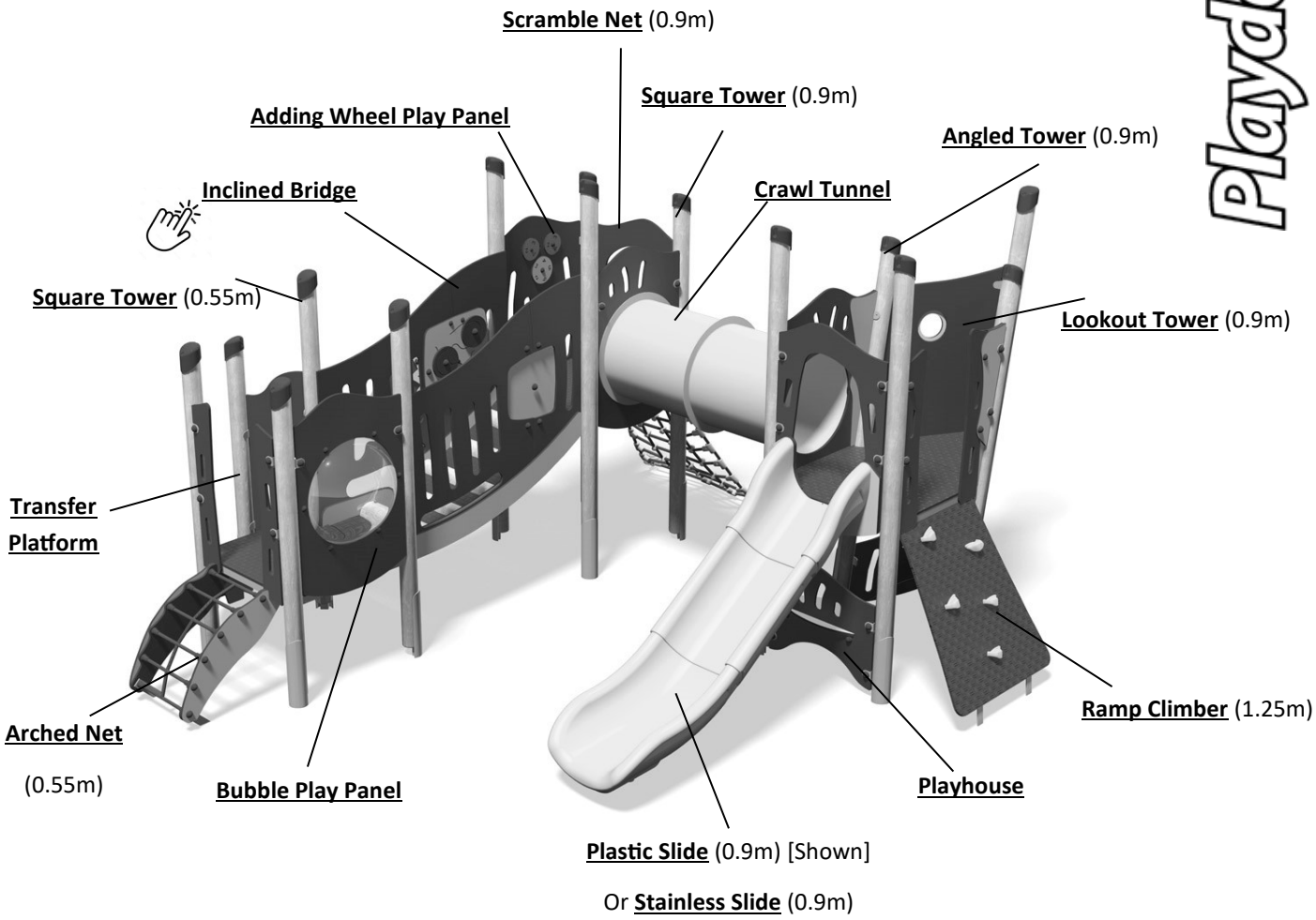

Unit Specification		
Equipment Dimension	4.3m x 3.9m x 2.2m	FHF
	0.9m	
Overall Weight	507kg	Heaviest Part
	20kg	
Largest Part	1.8m x 0.5m x 0.5m	Longest Part
	1.8m	
Maximum Gradient	1 in 50	Construction Space
	7.6m x 7.2m x 3.4m	
Manpower Required	2	Estimated Time
	22 hours	
Concrete Required	1.2m³	Concrete Required
	1.3m³ (Surface Fixed)	

Copyright © Playdale Playgrounds Ltd 2022. All rights reserved.

Plastic Slide

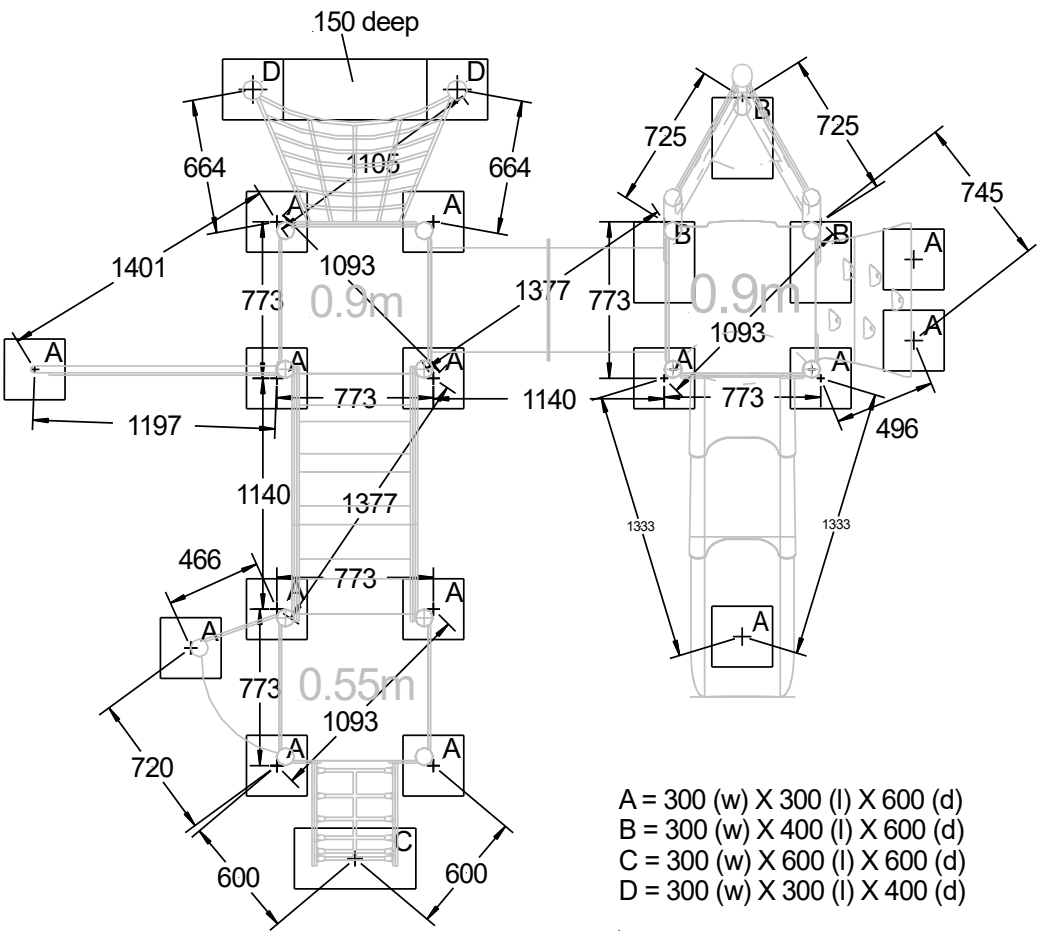

A = 300 (w) X 300 (l) X 600 (d)
B = 300 (w) X 400 (l) X 600 (d)
C = 300 (w) X 600 (l) X 600 (d)
D = 300 (w) X 300 (l) X 400 (d)

Stainless Steel Slide

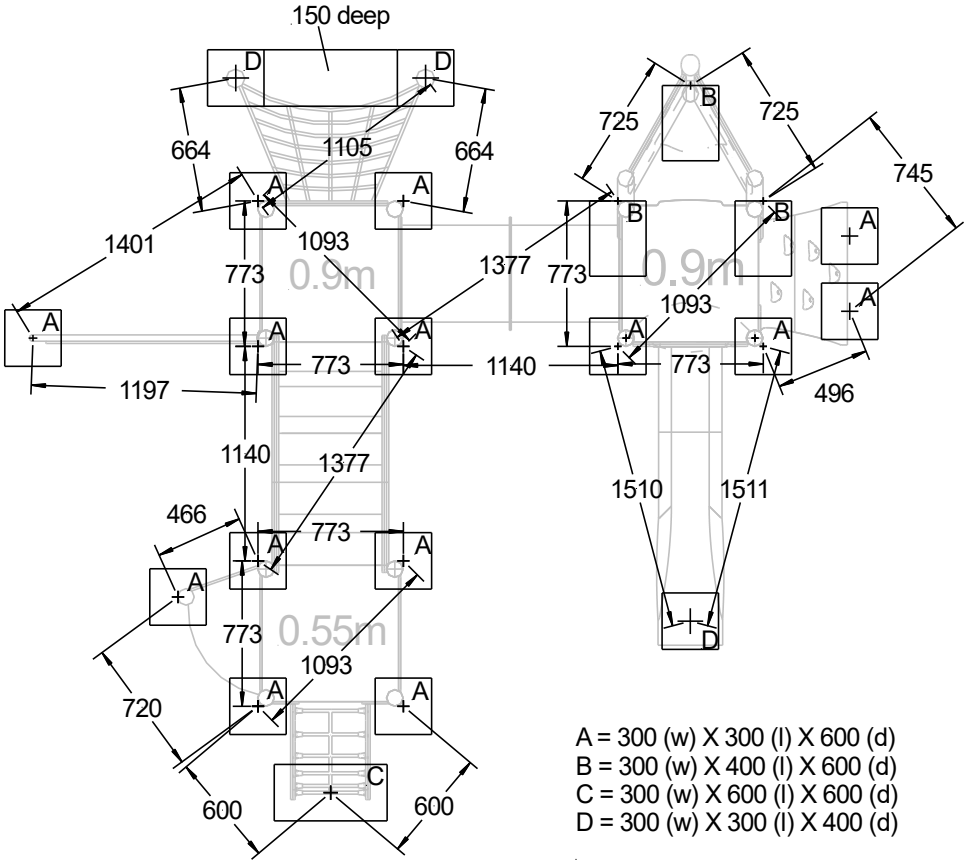

A = 300 (w) X 300 (l) X 600 (d)
B = 300 (w) X 400 (l) X 600 (d)
C = 300 (w) X 600 (l) X 600 (d)
D = 300 (w) X 300 (l) X 400 (d)

Copyright © Playdale Playgrounds Ltd 2016. All rights reserved.

Plastic Slide

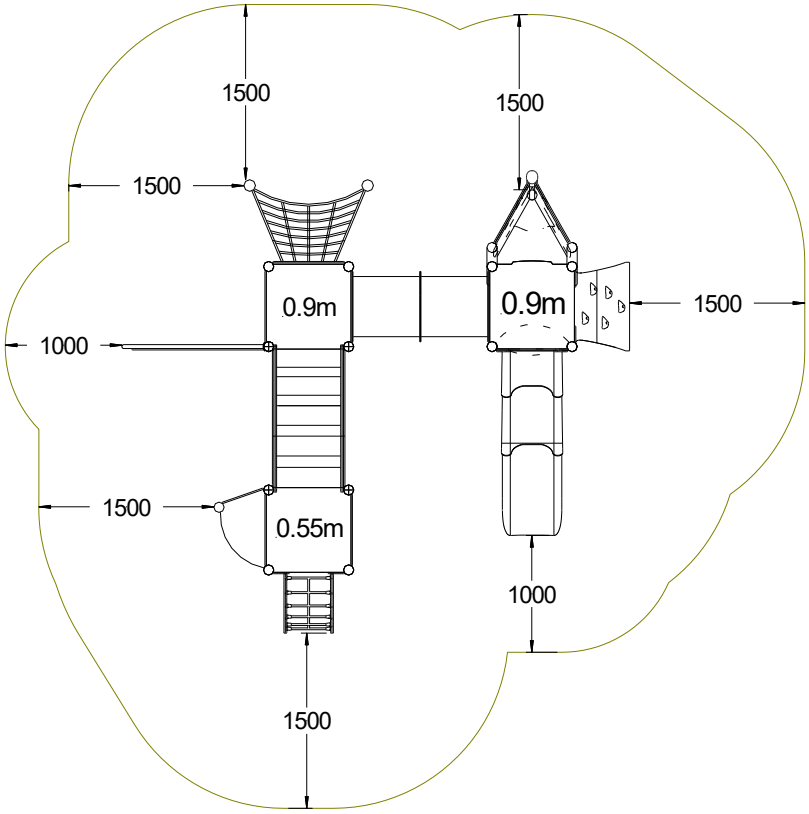

Stainless Steel Slide

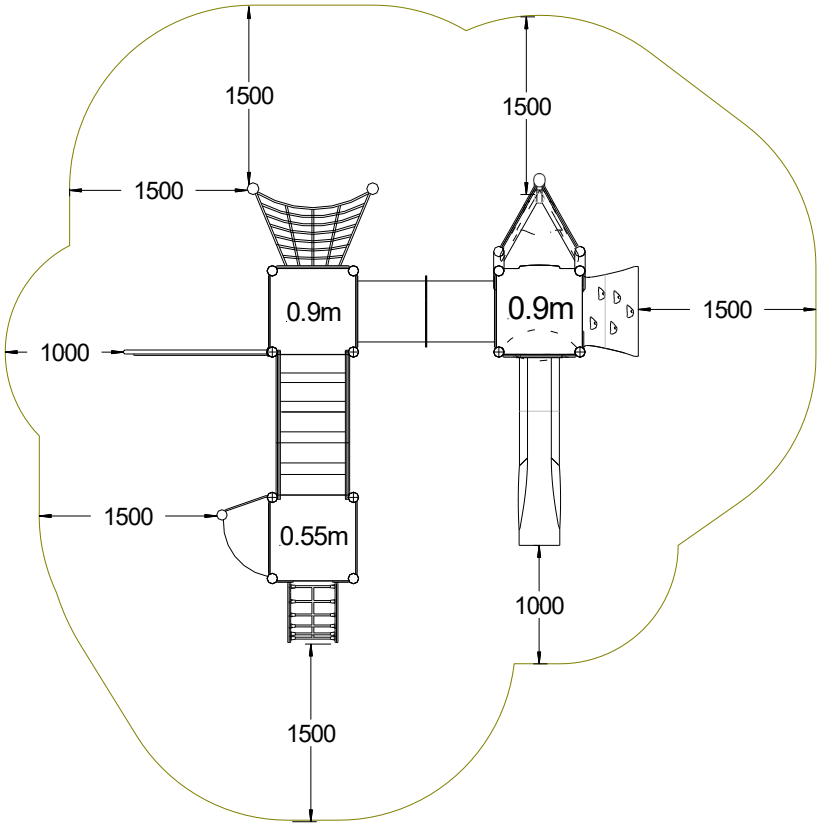

Copyright © Playdale Playgrounds Ltd 2016. All rights reserved.